UPQ-1P Wide Coverage Loudspeaker

thinking sound Meyer Sound



Keep these important operating instructions.
Check www.meyersound.com for updates.

DECLARATION OF CONFORMITY ACCORDING TO ISO/IEC GUIDE 22 AND EN 45014

Manufacturer's Name:
Meyer Sound Laboratories Inc.

Manufacturer's Address:
2832 San Pablo Avenue
Berkeley, CA 94702-2204, USA

Declares that the products
Product Name: UPQ-1P
Product Options: All

Conforms to the following Product Specifications
Safety: IEC 60065: 2005
EN 60065: 2002
EMC: EN 55103-1: 1997 emission (1)
EN 55103-2: 1997 immunity (2)

This device complies with EN 55103-1 & -2. Operation is subject to the following two conditions:
(1) this device may not cause harmful interference, and
(2) this device must accept any interference received, including interference that may cause undesired operation.

Supplementary Information
The product herewith complies with the requirements of the Low Voltage Directive (LVD) 2006/95/EC and the EMC Directive 2004/108/EC.

Office of Quality Manager
Berkeley, California USA
August 28, 2003

European Contact: Your local Meyer Sound dealer or Meyer Sound Germany, GmbH. Horresser Berg 4A, 56410 Montabaur, Germany.

Environmental specifications for Meyer Sound Electronics products

Operating Temperature	0° C to +45° C
Non operating Temperature	<–40° C or >+75° C
Humidity	to 95% at 35° C
Operating Altitude	to 4600 m (15,000 ft)
Non operating Altitude	to 6300 m (25,000 ft)
Shock	30 g 11 msec half-sine on each of 6 sides
Vibration	10–55 Hz (0.010 m peak-to-peak excursion)

CE N775
www.meyersound.com
Made in USA with domestic and foreign parts

TÜV Rheinland of North America, Inc. C US

N775

© 2008
Meyer Sound. All rights reserved.
UPQ-1P Wide Coverage Loudspeaker Operating Instructions

The contents of this manual are furnished for informational purposes only, are subject to change without notice, and should not be construed as a commitment by Meyer Sound Laboratories Inc. Meyer Sound assumes no responsibility or liability for any errors or inaccuracies that may appear in this manual. Except as permitted by applicable copyright law, no part of this publication may be reproduced, stored in a retrieval system, or transmitted, in any form or by any means, electronic, mechanical, recording or otherwise, without prior written permission from Meyer Sound.

Compass, Galileo, Intelligent AC, MAPP Online Pro, RMS, UltraSeries, QuietCool, and all alpha-numeric designations for Meyer Sound products and accessories are trademarks of Meyer Sound. Meyer Sound, QuickFly, and SIM are registered trademarks of Meyer Sound Laboratories Inc. (Reg. U.S. Pat. & Tm. Off.). All third-party trademarks mentioned herein are the property of their respective trademark holders.

Printed in the USA.

Part Number: 05.185.005.01, Rev. A2

SYMBOLS USED

These symbols indicate important safety or operating features in this booklet and on the chassis:

			
Dangerous voltages: risk of electric shock	Important operating instructions	Frame or chassis	Protective earth ground
Pour indiquer les risques résultant de tensions dangereuses	Pour indequer important instructions	Masse, châssis	Terre de protection
Warnung vor gefährlicher elektrischer Spannung	Wichtige Betriebsanweisung oder Gebrauchsanleitung	Rahmen oder Gehäuse	Masse Schutzleiter
Para indicar voltajes peligrosos	Instrucciones importantes de funcionamiento y/o manteniento	Armadura o chassis	Tierra proteccionista

IMPORTANT SAFETY INSTRUCTIONS

1. Read these instructions.
2. Keep these instructions.
3. Heed all warnings.
4. Follow all instructions.
5. Do not use this loudspeaker near water.
6. Clean only with dry cloth.
7. Do not block any ventilation openings. Install in accordance with Meyer Sound's installation instructions.
8. Do not install near any heat sources such as radiators, heat registers, stoves, or other apparatus that produce heat.
9. Do not defeat the safety purpose of the grounding-type plug. A grounding type plug has two blades and a third grounding prong. The third prong is provided for your safety. If the provided plug does not fit into your outlet, consult an electrician for replacement of the obsolete outlet.
10. Protect the power cord from being walked on or pinched, particularly at plugs, convenience receptacles, and the point where they exit from the loudspeaker. The AC mains plug or appliance coupler shall remain readily accessible for operation.
11. Only use attachments/accessories specified by Meyer Sound.
12. Use only with the caster rails or rigging specified by Meyer Sound, or sold with the loudspeaker. Handles are for carrying only.

    ⚠ **CAUTION:** Rigging should only be done by experienced professionals.

13. Unplug this loudspeaker during lightning storms or when unused for long periods of time.
14. Refer all servicing to qualified service personnel. Servicing is required when the loudspeaker has been damaged in any way, such as when the power-supply cord or plug has been damaged; liquid has been spilled or objects have fallen into the loudspeaker; rain or moisture has entered the loudspeaker; the loudspeaker has been dropped; or when for undetermined reasons the loudspeaker does not operate normally.

SAFETY SUMMARY

English

- To reduce the risk of electric shock, disconnect the loudspeaker from the AC mains before installing audio cable. Reconnect the power cord only after making all signal connections.
- Connect the loudspeaker to a two-pole, three-wire grounding mains receptacle. The receptacle must be connected to a fuse or circuit breaker. Connection to any other type of receptacle poses a shock hazard and may violate local electrical codes.
- Do not install the loudspeaker in wet or humid locations without using weather protection equipment from Meyer Sound.
- Do not allow water or any foreign object to get inside the loudspeaker. Do not put objects containing liquid on or near the unit.
- To reduce the risk of overheating the loudspeaker, avoid exposing it to direct sunlight. Do not install the unit near heat-emitting appliances, such as a room heater or stove.
- This loudspeaker contains potentially hazardous voltages. Do not attempt to disassemble the unit. The unit contains no user-serviceable parts. Repairs should be performed only by factory-trained service personnel.

Français

- Pour réduire le risque d'électrocution, débrancher la prise principale de l'haut-parleur, avant d'installer le câble d'interface allant à l'audio. Ne rebrancher le bloc d'alimentation qu'après avoir effectué toutes les connections.
- Branchez l'haut-parleur dans une prise de courant à 3 dérivations (deux pôles et la terre). Cette prise doit être munie d'une protection adéquate (fusible ou coupe-circuit). Le branchement dans tout autre genre de prise pourrait entraîner un risque d'électrocution et peut constituer une infraction à la réglementation locale concernant les installations électriques.
- Ne pas installer l'haut-parleur dans un endroit où il y a de l'eau ou une humidité excessive.
- Ne pas laisser de l'eau ou tout objet pénétrer dans l'haut-parleur. Ne pas placer de r´cipients contenant un liquide sur cet appareil, ni à proximité de celui-ci.
- Pour éviter une surchauffe de l'haut-parleur, conserver-la à l'abri du soleil. Ne pas installer à proximité d'appareils dégageant de la chaleur tels que radiateurs ou appareils de chauffage.
- Ce haut-parleur contient des circuits haute tension présentant un danger. Ne jamais essayer de le démonter. Il n'y a aucun composant qui puisse être réparé par l'utilisateur. Toutes les réparations doivent être effectuées par du personnel qualifié et agréé par le constructeur.

Deutsch

- Um die Gefahr eines elektrischen Schlages auf ein Minimum zu reduzieren, den Lautsprecher vom Stromnetz trennen, bevor ggf. ein Audio-Schnittstellensignalkabel angeschlossen wird. Das Netzkabel erst nach Herstellung aller Signalverbindungen wieder einstecken.
- Der Lautsprecher an eine geerdete zweipolige Dreiphasen-Netzsteckdose anschließen. Die Steckdose muß mit einem geeigneten Abzweigschutz (Sicherung oder Leistungsschalter) verbunden sein. Der Anschluß der unterbrechungsfreien Stromversorgung an einen anderen Steckdosentyp kann zu Stromschlägen führen und gegen die örtlichen Vorschriften verstoßen.
- Der Lautsprecher nicht an einem Ort aufstellen, an dem sie mit Wasser oder übermäßig hoher Luftfeuchtigkeit in Berührung kommen könnte.
- Darauf achten, daß weder Wasser noch Fremdkörper in das Innere den Lautsprecher eindringen. Keine Objekte, die Flüssigkeit enthalten, auf oder neben die unterbrechungsfreie Stromversorgung stellen.
- Um ein Überhitzen dem Lautsprecher zu verhindern, das Gerät vor direkter Sonneneinstrahlung fernhalten und nicht in der Nähe von wärmeabstrahlenden
- Haushaltsgeräten (z.B. Heizgerät oder Herd) aufstellen.
- Im Inneren diesem Lautsprecher herrschen potentiell gefährliche Spannungen. Nicht versuchen, das Gerät zu öffnen. Es enthält keine vom Benutzer reparierbaren Teile. Reparaturen dürfen nur von ausgebildetem Kundenienstpersonal durchgeführt werden.

Español

- Para reducir el riesgo de descarga eléctrica, desconecte de la red de voltaje el altoparlante antes de instalar el cable de señal de audio. Vuelva a conectar la alimentacion de voltaje una vez efectuadas todas las interconexiones de señalizacion de audio.
- Conecte el altoparlante a un tomacorriente bipolar y trifilar con neutro de puesta a tierra. El tomacorriente debe estar conectado a la protección de derivación apropiada (ya sea un fusible o un disyuntor). La conexión a cualquier otro tipo de tomacorriente puede constituir peligro de descarga eléctrica y violar los códigos eléctricos locales.
- No instale el altoparlante en lugares donde haya agua o humedad excesiva.
- No deje que en el altoparlante entre agua ni ningún objeto extraño. No ponga objetos con líquidos encima de la unidad ni cerca de ella.
- Para reducir el riesgo de sobrecalentamiento, no exponga la unidad a los rayos directos del sol ni la instale cerca de artefactos que emiten calor, como estufas o cocinas.
- Este altoparlante contiene niveles de voltaje peligrosos en potencia. No intente desarmar la unidad, pues no contiene piezas que puedan ser reparadas por el usuario. Las reparaciones deben efectuarse únicamente por parte del personal de mantenimiento capacitado en la fábrica.

CONTENTS

Chapter 1: Introduction 7

How to Use This Manual 7
Introducing the UPQ-1P Loudspeaker 7
Advanced UPQ Technology 8
Integrated Amplifier and Processing 8
Rig-Ready 9
Total System Approach 10

Chapter 2: Power Requirements 11

AC Power Distribution 11
The AC Connectors 11
Power Connector Wiring 12
UPQ-1P Voltage Requirements 12
UPQ-1P Current Requirements 13
Electrical Safety Issues 13

Chapter 3: Amplification and Audio 15

VEAM Cabling 15
Audio Input Modules 15

Chapter 4: Adding Subwoofers to a UPQ-1P Loudspeaker System 19

Adding Subwoofers by Daisy-Chaining 19
Adding Subwoofers with a Line Driver 20
Galileo Loudspeaker Management System 20
Using Digital Signal Processors 20

Chapter 5: QuickFly Rigging 23

Basic Eyebolt Rigging 23
Pole-Mounting the UPQ-1P 24
The MYA-UPQ Mounting Yoke 24
The MPA-UPQ Array Adapter 25

Chapter 6: The RMS Remote Monitoring System 29

The RMS Software 29
The RMS Module 30

Chapter 7: System Design and Integration Tools 31

MAPP Online Pro 31
The SIM 3 Measurement System 32

Appendix A: Optional VEAM Multipin Connector 33

Appendix B: UPQ-1P Specifications 35

CHAPTER 1: INTRODUCTION

HOW TO USE THIS MANUAL

Make sure to read these operating instructions in their entirety before configuring a loudspeaker system with UPQ-1P loudspeakers. In particular, pay close attention to material related to safety issues.

As you read these operating instructions, you will encounter the following icons for notes, tips, and cautions:

NOTE: A note identifies an important or useful piece of information relating to the topic under discussion.

TIP: A tip offers a helpful tip relevant to the topic at hand.

CAUTION: A caution gives notice that an action may have serious consequences and could cause harm to equipment or personnel, or could cause delays or other problems.

Information and specifications are subject to change. Updates and supplementary information are available on the Meyer Sound® website:

http://www.meyersound.com

Meyer Sound Technical Support is available at:

- **Tel:** +1 510 486.1166
- **Fax:** +1 510 486.8356
- **Email:** techsupport@meyersound.com

INTRODUCING THE UPQ-1P LOUDSPEAKER

The self-powered UPQ-1P wide coverage loudspeaker is a member of the popular UltraSeries® family of loudspeakers. The UPQ-1P loudspeaker's extended low-frequency headroom gives it a smooth sound over a wide operating frequency range of 55 Hz to 18 kHz. With its easy-to-use and versatile QuickFly® rigging, the UPQ-1P loudspeaker is equally suited to touring, rental, and fixed installation applications. High power-to-size ratio and ease of use make it an outstanding performer in concerts and corporate AV applications, and ideal for venues such as theatres, houses of worship, ballrooms, and clubs. The UPQ-1P loudspeaker produces a peak output of 136 dB SPL with low distortion as well as exceptionally flat phase and frequency response in a compact, vented two-way, trapezoid enclosure.

The UPQ-1P loudspeaker offers an extremely consistent polar response, and is distinguished by its constant-Q horn that provides 80-degree horizontal by 50-degree vertical coverage (-6 dB points) and a gentle coverage rolloff that extends uniformly out to its -10 dB points of 100 by 60 degrees.



UPQ-1P Wide Coverage Loudspeaker

The smooth and consistent performance of the horn is the result of meticulous research in Meyer Sound's anechoic chamber, and it exhibits a remarkably consistent beamwidth in both the horizontal and vertical planes across a wide frequency range of 1 kHz to 18 kHz. In addition, the UPQ horns deliver uniform attenuation for all frequencies outside the specified beamwidth.

The UPQ-1P is designed to be used as the main system in small to mid-sized venues or integrate smoothly and easily with other Meyer Sound products as centerfill or sidefills in larger applications.

UPQ-1P loudspeakers are available in custom color finishes, allowing them to blend in with any environment. A weather-protected version with wood-treated enclosures and rain hood is also available to safeguard the rear of the loudspeaker and connectors from the elements.

ADVANCED UPQ TECHNOLOGY

The UPQ-1P loudspeaker is a self-powered, two-way design featuring drivers designed and manufactured at Meyer Sound's Berkeley, California, factory.

The low section features a high-power, neodymium-magnet, 15-inch cone driver with 4-inch voice coil, created to meet the power requirements of the system. The driver is a proprietary design employing neodymium magnets for higher efficiency and power handling with reduced weight. The high-frequency section uses a 1.5-inch exit, 4-inch diaphragm compression driver with a neodymium magnet, powered by a dedicated amplifier channel. The output of the high-frequency driver is coupled to a constant-Q horn that provides 80-degree horizontal by 50-degree vertical coverage (-6 dB points).

INTEGRATED AMPLIFIER AND PROCESSING

A self-powered loudspeaker, the UPQ-1P incorporates a high-power, 2-channel, class AB/H power amplifier and sophisticated control circuitry housed within the cabinet, dramatically simplifying setup and installation. Supply power distribution to the system, connect a line level signal, and it's ready — leaving you to focus on design implementation instead of installation.

The UPQ-1P loudspeaker's on-board amplifier delivers 1275 watts total burst power (2550 watts peak). The convection-cooled amplifier utilizes Meyer Sound's proprietary QuietCool™ fan technology. The QuietCool fan will only turn on at high audio levels to prevent overheating under extreme usage conditions and includes dedicated limiters to protect and extend the life of the drivers at very high levels and prevent severe non-linear circumstances.



UPQ Amplifier and User Panel

This modular, field-replaceable amplifier/processing package also incorporates Meyer Sound's Intelligent AC™ power supply, which automatically adjusts for any line voltage worldwide and provides both soft turn-on and transient protection. The UPQ amplifier is compatible with the optional Meyer Sound's RMS™ remote monitoring system, which offers comprehensive monitoring of system parameters on a Windows®-based network.

NOTE: In order to use RMS, you will need Meyer Sound's optional RMS software, interface card, and a PC running Windows® 2000/XP or higher.

NOTE: Complete acoustical and electrical specifications are covered in Appendix B.

RIG-READY

The durable trapezoidal enclosure of the UPQ-1P loudspeaker has a textured, hard-shell black finish and includes an integral pole mount receptacle that accepts 1-1/2” poles or speaker stands.



UPQ-1P Pole Mount Receptacle

In addition, the cabinet includes versatile rigging end plates. The end plates are made of heavy-duty, high-strength, corrosion-resistant 6061-T6 aluminum, with multiple, strategically placed threaded M10 attachment points; they allow eye-bolt rigging in a variety of configurations. QuickFly rigging options include the MPA-UPQ pickup and array plate and MYA-UPQ mounting yoke.



UPQ-1P Suspended from an MPA-UPQ



UPQ-1P Arrayed Using MPA-UPQ Pick-up and Array Plate



UPQ-1P Suspended in an MYA-UPQ Mounting Yoke

TOTAL SYSTEM APPROACH

The UPQ-1P loudspeaker integrates seamlessly with other Meyer Sound products. With compatible acoustical and performance characteristics and dedicated QuickFly rigging hardware, the UPQ-1P loudspeaker and other Meyer Sound self-powered loudspeakers can provide you with everything you need to design and implement systems for optimum performance in venues of any size or shape.

TIP: TIP: Meyer Sound MAPP Online Pro™ acoustical prediction software allows you to quickly determine the coverage, frequency response, impulse response, and maximum output of Meyer Sound loudspeakers, and provides useful rigging information.

In addition to smooth integration with other Meyer Sound loudspeakers, the UPQ-1P loudspeaker can be supplemented with Meyer Sound subwoofers for extended low-frequency bandwidth and headroom. UPQ systems can be deployed in combination with 700-HP ultrahigh-power subwoofers, extending the system frequency response down to 30 Hz.



The 700-HP Ultrahigh-Power Subwoofer

The 600-HP compact high-power dual 15-inch subwoofer makes an ideal complement in applications where the power and features of the 700-HP are not needed.



The 600-HP High-Power Subwoofer

In addition, the UPQ-1P loudspeaker can be used in combination with other Meyer Sound subwoofers, such as the 650-P high-power subwoofer.

The UPQ-1P is supported by Meyer Sound's MAPP Online Pro acoustical prediction program and the Galileo™ loudspeaker management system. Once a Meyer Sound system is designed and installed, its performance can be confirmed using a SIM® 3 audio analyzer system.

CHAPTER 2: POWER REQUIREMENTS

The UPQ-1P loudspeaker combines advanced loudspeaker technology with equally advanced power capabilities. Understanding power distribution, voltage and current requirements, as well as electrical safety issues, is critical to the safe operation of the UPQ-1P loudspeaker.

AC POWER DISTRIBUTION

All components in an audio system (self-powered loudspeakers, mixing consoles, and processors) must be properly connected to the AC power distribution, ensuring that AC line polarity is preserved, and that all grounding points are connected to a single node or common point using the same cable gauge as the neutral and line cables.

NOTE: Improper grounding connections between loudspeakers and the rest of the audio system may produce noise or hum, or cause serious damage to the input and output stages of the system's electronic components.

CAUTION: Before applying AC power to any Meyer Sound self-powered loudspeaker, make sure that the voltage potential difference between neutral and earth ground is less than 5 V AC.

Figure 1 illustrates a basic three-phase AC distribution system with the loudspeaker load distributed across the three phases. All loudspeakers are connected to common neutral and earth-ground points.

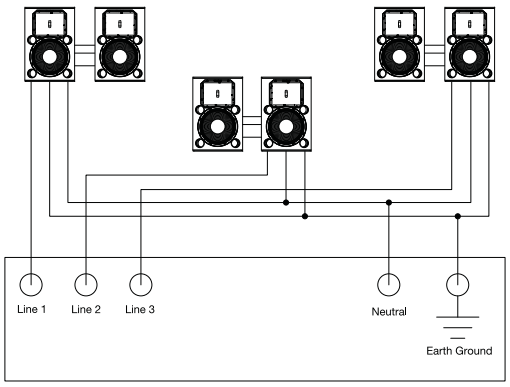

Figure 1: AC Power Distribution System

THE AC CONNECTORS

The user panel on the back of the UPQ-1P loudspeaker includes the following AC connectors:



UPQ-1P AC Input (left) and AC Loop Output (right) Connectors

The AC Input Connector (Blue)

The blue AC Input connector supplies power to the UPQ-1P loudspeaker. The connector is rated at 20 amps and uses a PowerCon3 AC mains locking connector that prevents accidental disconnections. A 10-foot AC power cable, rated at 15 amps, is included with each loudspeaker. If you replace the included AC power cable, make sure to use a cable with the appropriate power plug (on the other end) for the area in which you will operate the unit.

The AC Input connector also supplies power to any additional loudspeakers connected to the loudspeaker's gray Loop Output connector. Each UPQ-1P loudspeaker requires approximately 5 A rms maximum at 115 V AC for proper operation.

CAUTION: When using the included AC power cable, do not loop more than two additional UPQ loudspeakers from the AC Loop Output connector at 115 V (three total for the circuit), and not more than six at 230 V (seven total for the circuit).

The AC Loop Output Connector (Gray)

The gray AC Loop Output connector allows multiple UPQ loudspeakers to be looped and powered from a single power source. Connect the AC Loop Output of the first loudspeaker to the AC Input of the second, and so forth. The AC Loop Output uses a PowerCon3 AC mains locking connector that prevents accidental disconnections.

The maximum number of loudspeakers that can be looped from the Loop Output connector is determined by the voltage of the power source, the circuit breaker rating, and the rating of the AC power cable connected to the first UPQ-1P.

Number of UPQs that Can Be Looped with AC Power

Circuit Breaker/ Connector Rating	115 V AC	230 V AC	100 V AC
15 amps	2 looped (3 total)	6 looped (7 total)	2 looped (3 total)
20 amps	4 looped (5 total)	8 looped (9 total)	3 looped (4 total)

Each UPQ-1P loudspeaker ships with one AC looping connector for making AC looping cables. Assembled AC looping cables are available from Meyer Sound.

⚠ **CAUTION:** Do not exceed the current capability of the 20-amp Input Connector for the UPQ-1P. When looping loudspeakers, consider the total current draw for all loudspeakers on the circuit, including the first loudspeaker.

POWER CONNECTOR WIRING

The UPQ-1P loudspeaker requires a grounded outlet. To operate safely and effectively, it is extremely important that the entire system be properly grounded.

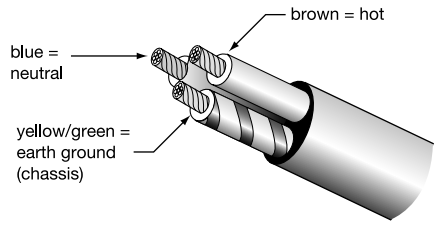

AC Cable Color Code

When wiring international or special-purpose power connectors:

- Connect the blue wire to the black terminal, or the terminal marked with an N.
- Connect the brown wire to the red terminal, or the terminal marked with an L.
- Connect the yellow and green wire to the green (or green and yellow) terminal, or the terminal marked with an E.

⚠ **CAUTION:** When creating AC power cables and distribution systems, it is important to preserve AC line polarity and connect the earth ground on both ends of the cable. The UPQ-1P loudspeaker requires a grounded connection. Always use a grounded outlet and plug. It is extremely important that the system be properly grounded in order to operate safely and properly. Do not ground-lift the AC cable.

UPQ-1P VOLTAGE REQUIREMENTS

The UPQ-1P loudspeaker operates safely and continuously when the AC voltage stays within 90–264 V AC at 50 or 60 Hz. The UPQ-1P allows any combination of voltage to GND (neutral-line-ground or line-line-ground).

If the voltage drops below 90 V (brownout), the UPQ-1P loudspeaker uses stored power to continue operating temporarily; the loudspeaker will shut down if the voltage does not rise above the low boundary before the stored power is used.

If the voltage rises above 264 V, the power supply can be damaged.

⚠ **CAUTION:** The power source for the UPQ-1P loudspeaker should always operate within the required voltage range, at least a few volts from the upper and lower ranges. This will ensure that AC voltage variations from the service entry — or peak voltage drops due to cable runs — will not cause the loudspeaker's amplifiers to cycle on and off or cause damage to the power supply.

Powering Up the UPQ-1P

When AC power is applied to the UPQ-1P loudspeaker, its Intelligent AC™ power supply automatically selects the correct operating voltage, allowing the loudspeaker to be used internationally without manually setting voltage switches. In addition, Intelligent AC also suppresses high-voltage transients up to several kilovolts, filters common mode and differential mode radio frequencies (EMI), and sustains operation temporarily during low-voltage periods.

When powering up the UPQ-1P loudspeaker, the following startup events take place over several seconds.

1. Audio output is muted.
2. Voltage is detected and the power supply mode is automatically adjusted as necessary.
3. The power supply ramps up.
4. The green On/Temp LED on the user panel lights up, indicating the loudspeaker is ready to output audio.

NOTE: The fan remains off at turn-on. It is controlled by audio level and operates only at high audio levels.

CAUTION: If the On/Temp LED does not light up, or the loudspeaker does not output audio after ten seconds, remove AC power immediately and verify that the voltage is within the required range. If the problem persists, contact Meyer Sound Technical Support.

UPQ-1P CURRENT REQUIREMENTS

The current draw for the UPQ-1P loudspeaker is dynamic and fluctuates as operating levels change. Since different cables and circuit breakers heat up at varying rates, it is important to understand the following types of current ratings and how they affect circuit breaker and cable specifications.

- **Idle Current** — The maximum rms current during idle periods.
- **Maximum Long-Term Continuous Current** — The maximum rms current during a period of at least 10 seconds. The Maximum Long-Term Continuous Current is used to calculate temperature increases for cables, to ensure that cable sizes and gauges conform to electrical code standards. The current rating is also used as a rating for slow-reacting thermal breakers. In addition, the Maximum Long-Term Continuous Current can be used to calculate the AC looping capability of the UPQ-1P.
- **Burst Current** — The maximum rms current during a period of around one second. The Burst Current is used as a rating for magnetic breakers. It is also used for calculating the peak voltage drop in long AC cable runs according to the following formula:

  V pk (drop) = I pk x R (cable total)
- **Ultimate Short-Term Peak Current** — A rating for fast-reacting magnetic breakers.
- **Inrush Current** — The spike of initial current presented when powering on.

You can use the following table as a guide for selecting cable gauges and circuit breaker ratings for the system's operating voltage.

UPQ-1P Current Draw

Current Draw	115 V AC	230 V AC	100 V AC
Idle Current	0.50 A rms	0.28 A rms	0.56 A rms
Maximum Long-Term Continuous Current	3.9 A rms	2.0 A rms	4.4 A rms
Burst Current	7.0 A rms	3.9 A rms	8.2 A rms
Ultimate Short-Term Peak Current	18.0 A peak	10.5 A peak	20.0 A peak
Inrush Current	6.0 A peak	8.4 A peak	7.1 A peak

The minimum electrical service amperage required by a UPQ-1P system is the sum of the Maximum Long-Term Continuous Current for each loudspeaker. An additional 30 percent above the minimum amperage is recommended to prevent peak voltage drops at the service entry.

NOTE: For best performance, the AC cable voltage drop should not exceed 10 V, or 10 percent at 115 V and 5 percent at 230 V. Make sure that even with AC voltage drops that the AC voltage always remains within the operating window.

ELECTRICAL SAFETY ISSUES

Pay close attention to these important electrical and safety issues.

- The UPQ-1P loudspeaker requires a grounded outlet. Always use a grounded outlet and plug.

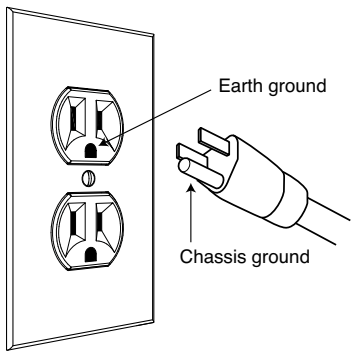

- Do not use a ground-lifting adapter or cut the AC cable ground pin.

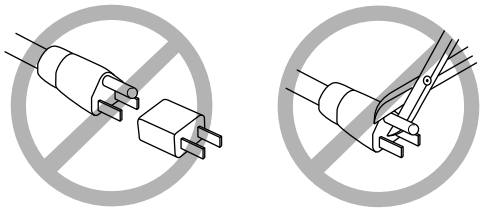

- Keep all liquids away from the UPQ-1P loudspeaker to avoid hazards from electrical shock.
- Do not operate the unit if the power cables are frayed or broken.
- Do not exceed the current capability of the 20-amp AC Input connector for the UPQ-1P loudspeaker. When looping loudspeakers, consider the total current draw for all loudspeakers on the circuit, including the first loudspeaker.
- Make sure the AC power cable for the UPQ-1P loudspeaker has the appropriate power plug (on the other end) for the area in which you will operate the loudspeaker. In addition, the AC power cable must be rated for the total current draw of all loudspeakers looped from the power source.

CHAPTER 3: AMPLIFICATION AND AUDIO

The low- and high-frequency drivers in the UPQ-1P loudspeaker are powered by a two-channel proprietary Meyer Sound amplifier with MOSFET output stages. The audio signal is processed with an electronic crossover, correction filters for phase and frequency response, and driver protection circuitry. Each channel has peak and rms limiters that prevent driver over-excursion and regulate the temperature of the voice coil.

The user panel on the back of the UPQ-1P loudspeaker has two slots for modules. The top slot contains an audio input module (described in this chapter). The bottom slot is reserved for the optional RMS module, used for connecting to the RMS remote monitoring system (see Chapter 6, “The RMS Remote Monitoring System”).

VEAM CABLING

The UPQ-1P loudspeaker can be ordered from the factory with a VEAM all-in-one connector. VEAM connectors allow you to consolidate AC power, audio, and RMS into a single cable, facilitating easy connections and quick setups. For more information, see Appendix A, “Optional VEAM Multipin Connector.”

AUDIO INPUT MODULES

The UPQ-1P loudspeaker can be equipped with either of two audio input modules: the *Looping Audio Input* module or the *Looping, Polarity, and Attenuating Audio Input* module. Both audio input modules have input and looping connectors, and LEDs for monitoring temperature and limiting. In addition, the Looping, Polarity, and Attenuating Audio Input module has a switch for swapping the signal’s polarity, and a knob for attenuating the input signal level to –18 dB.

The Looping Audio Input Module

The Looping Audio Input module includes the following connectors and LEDs.



Looping Audio Input Module

Input Connector

The female XLR Input connector accepts a balanced audio signal with an input impedance of 10 kOhm. The connector uses the following wiring:

- **Pin 1** — 220 kOhm to chassis and earth ground (ESD clamped)
- **Pin 2** — Signal (+)
- **Pin 3** — Signal (–)
- **Case** — Earth (AC) ground and chassis

Pins 2 and 3 carry the input as a differential signal. Pin 1 is connected to earth through a 220 kOhm, 1000 pF, 15 V clamped network. This circuitry provides virtual ground lift for audio frequencies while allowing unwanted signals to bleed to ground. Make sure to use standard, balanced XLR audio cables with all three pins connected on both ends. Telescopic grounding is not recommended, and shorting an input connector pin to the case may cause a ground loop, resulting in hum.

> **TIP:** If unwanted noise or hiss is produced by the loudspeaker, disconnect its input cable. If the noise stops, there is most likely nothing wrong with the loudspeaker. To locate the source of the noise, check the audio cable, source audio, and AC power.

Loop Connector

The male XLR Loop connector allows multiple UPQ-1P loudspeakers to be looped from a single audio source. Connect the Loop output of the first loudspeaker to the Input of the second, and so forth. The Loop connector is wired in parallel to the Input connector and transmits the unbuffered source signal even when the loudspeaker is powered off.

To avoid distortion when looping multiple UPQ-1P loudspeakers, make sure the source device can drive the total load impedance of the looped loudspeakers. In addition, the source device must be capable of delivering a minimum of 20 dBV (10 V rms into 600 ohms) to yield the maximum peak SPL over the operating bandwidth of the loudspeaker.

To calculate the load impedance for the looped loudspeakers, divide 10 kOhms (the input impedance for a single UPQ-1P) by the number of looped loudspeakers. For example, the load impedance for 10 UPQ-1P loudspeakers is 1000 ohms (10 kOhms / 10). To drive this number of looped loudspeakers, the source device should have an output impedance of 100 ohms or less. This same rule applies when looping UPQ-1P loudspeakers with other self-powered Meyer Sound loudspeakers and subwoofers.

NOTE: Most source devices are capable of driving loads no smaller than 10 times their output impedance.

NOTE: Make sure that all cabling for looped loudspeakers is wired correctly (Pin 1 to Pin 1, Pin 2 to Pin 2, and so forth) to prevent the polarity from being reversed. If one or more loudspeakers in a system have reversed polarity, frequency response and coverage can be significantly degraded.

Limit LEDs

The low- and high-frequency drivers for the UPQ-1P loudspeaker is powered by separate amplifier channels, each with their own limiter. Limiting activity is indicated with the two yellow Limit LEDs. The top LED indicates limiting for the high-frequency channel and the bottom LED indicates limiting for the low-frequency channel. When engaged, a channel's limiter not only protects the driver, but also prevents signal peaks from causing excessive distortion in the amplifier's channel, thereby preserving headroom and maintaining smooth frequency responses at high levels. When a channel's level returns to normal, below the limiter's threshold, limiting ceases.

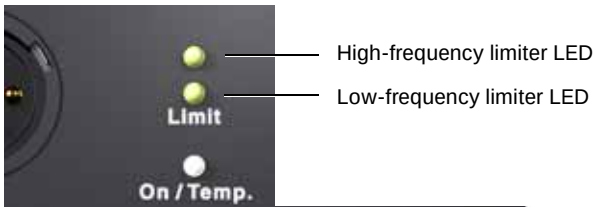

Limit LEDs

The UPQ-1P loudspeaker performs within its acoustical specifications at normal temperatures when the Limit LEDs are unlit, or if the LEDs are lit for two seconds or less and then turn off for at least one second. If an LED remains lit for longer than three seconds, that channel enters hard limiting where:

- Increases to the input level have no effect.
- Distortion increases due to clipping and nonlinear driver operation.
- The driver is subjected to excessive heat and excursion, which will compromise its life span and may eventually lead to damage over time.

CAUTION: The Limit LEDs indicate when a safe, optimum level is exceeded. If a UPQ-1P loudspeaker begins to limit before reaching the required SPL, consider adding more loudspeakers to the system.

NOTE: The UPQ-1P loudspeaker uses optical limiters that add no noise and have no effect on the signal when the limiters are not engaged and the Limit LEDs are not lit.

On/Temp LED

When the UPQ-1P loudspeaker is powered on, its On/Temp LED turns green. In the event that the temperature of the heatsink reaches 85°C (185°F), the On/Temp. LED on the rear panel turns from green (On) to red (Temp.) and the limiter threshold is lowered to a safe level to prevent the system from overheating. Under high temperature conditions the output level is reduced by approximately 6 dB.

When the heatsink temperature decreases to 80°C (176°F), the On/Temp. LED changes from red to green and the limiter threshold returns to normal.

NOTE: When the On/Temp LED is red, this is an indication that the unit is reaching its maximum dissipation and a reduction in SPL is recommended.

TIP: When the UPQ-1P loudspeaker is connected to an RMS network, the RMS software provides additional feedback on the loudspeakers' operating temperature. For more information, see Chapter 6, "The RMS Remote Monitoring System."

Amplifier Cooling System

The amplifier for the UPQ-1P loudspeaker relies on natural convection for cooling at low to mid audio levels; it is fan-assisted at high audio levels.

The fan is controlled by audio level. It remains off at turn-on and at low to mid audio levels. Operating only at high audio levels makes it virtually inaudible.

⚠ **CAUTION:** The heatsink for the UPQ-1P loudspeaker can reach temperatures of up to 85° C (185° F) during extreme operation. Use extreme caution when approaching the rear of the loudspeaker.

⚠ **CAUTION:** To keep the UPQ-1P from getting too hot, allow for proper ventilation around the loudspeaker, especially when it is operated in tightly packed conditions.

⚠ **CAUTION:** In the unlikely event that the heatsink temperature for the UPQ-1P reaches 95° C (203° F), the loudspeaker will automatically shut down until AC power is removed to allow the heatsink to cool. If after cooling and reapplying AC power the loudspeakers shut down again, contact Meyer Sound for repair information.

The Looping, Polarity, and Attenuating Audio Input Module (Optional)

The Looping, Polarity, and Attenuating Audio Input module has the same input and output connectors and LEDs found on the Looping Audio Input module (see “The Looping Audio Input Module” on page 15). In addition, it also has a Polarity switch and Attenuator knob.



Looping, Polarity, and Attenuating Audio Input Module

Polarity Switch

The Polarity switch lets you change the polarity of the source signal. When the switch is in the up (+) position, pin 2 is hot relative to pin 3, resulting in a positive pressure wave when a positive signal is applied to pin 2. When the switch is in the down (–) position, pin 3 is hot relative to pin 2, resulting in a positive pressure wave when a positive signal is applied to pin 3.

Attenuator Knob

The Attenuator knob reduces the source signal level connected to the Input connector. The knob offers an attenuation range of 0 dB (no attenuation), when turned all the way to the right, to –18 db, when turned all the way to the left.

The Attenuator knob does not affect the signal coming from the Loop connector. The Loop connector is wired in parallel to the Input connector and transmits the unbuffered source signal (even when the loudspeaker is powered off).

CHAPTER 4: ADDING SUBWOOFERS TO A UPQ-1P LOUDSPEAKER SYSTEM

A UPQ-1P loudspeaker system can be deployed with Meyer Sound self-powered subwoofers (see Table 2). Subwoofers achieve very low frequency responses and extend the system response appreciably, increasing the overall acoustic power of the system in the lowest frequencies.

The ideal ratio of UPQ loudspeakers to subwoofers depends on the following variables:

- Subwoofer model
- System configuration
- Frequency content of source material
- Headroom required for low frequencies

For most applications, the ratios in Table 2 should yield good results.

Table 2: Recommended Meyer Sound Subwoofers

Sub-woofer	Frequency Response	Recommended Ratio (Number of UPQs per Subwoofer)
650-P	28–100 Hz ±4 dB	2 x 1
600-HP	39–130 Hz ±4 dB	2 x 1
700-HP	30–125 Hz ±4 dB	2 x 1 for bass-heavy applications
USW-1P	35–180 Hz ±4 dB	1 x 1 for bass-heavy applications; 2 x 1 for flat frequency response

Full-range signals can be connected directly to Meyer Sound self-powered loudspeakers because the loudspeakers have built-in active crossovers. Subwoofers can be added to a UPQ system by simply daisy-chaining them to the UPQ loudspeakers. In more complex systems, subwoofers can be added by using line drivers or digital signal processor to send multiple outputs to each sub-system. In addition, you can use low-cut filters to flatten the overall frequency response of the system while increasing the UPQ headroom in the lower frequencies.

NOTE: If the subwoofer's Limit LEDs begin to light before reaching the required SPL, consider adding more subwoofers to meet the SPL requirements without exposing the drivers to excessive heat and excursion.

TIP: MAPP Online Pro™ can be used to accurately predict the appropriate loudspeaker deployment and subwoofer integration for a loudspeaker systems, complete with coverage data, system delay and equalization settings, rigging information, and detailed design illustrations. For more information, see "MAPP Online Pro" on page 31.

ADDING SUBWOOFERS BY DAISY-CHAINING

When UPQ-1P loudspeakers and subwoofers are daisy-chained using the Loop connector, the result is a fairly flat frequency response. However, the response will show an increase in the 60–200 Hz range where the loudspeakers' response overlaps at certain ratios (see Table 2).

To add a subwoofer by daisy-chaining:

1. Daisy-chain the suggested number of UPQ loudspeakers for your subwoofer (see Table 2). Connect the source signal to the Input of the first UPQ-1P, then connect the Loop output of the first UPQ-1P to the Input of the second UPQ-1P (and so forth).
2. Connect the Loop output of the last UPQ in the chain to the subwoofer Input.
3. Configure the polarities for the loudspeakers:

- If the UPQ loudspeakers and subwoofer are coplanar, or they are very close together (four feet or less), set their polarities to the same value. If any of the loudspeakers have a Polarity switch, set each switch to the up (+) position.
- If the UPQ loudspeakers and subwoofer are more than four feet apart, or if a delay is required between them, use a measurement system like Meyer Sound's SIM 3 to determine appropriate delay and polarity settings.

CAUTION: Make sure the source signal is sufficient to drive the total load impedance of the daisy-chained loudspeakers (see "Loop Connector" on page 15).

ADDING SUBWOOFERS WITH A LINE DRIVER

Using a line driver with dedicated low and mid-hi outputs (like Meyer Sound's LD-1A and LD-2) to drive a UPQ-1P loudspeaker system with subwoofers allows adjustments to the gain and polarity of each sub-system. This lets you effectively compensate for the ratio of loudspeakers to subwoofers, as well as any acoustical conditions. You can also engage a low-cut filter on the signal routed to the UPQs to flatten the overall frequency response, minimizing the gain in the frequency range where the UPQs and subwoofers overlap while increasing the UPQ-1P headroom in the lower frequencies.

NOTE: When using a line driver, if the gains for the UPQ-1P loudspeakers and subwoofer are set to the same level, the combined response is identical to a daisy-chained configuration, resulting in a gain in the overlapping frequency range.

To add a subwoofer with a line driver:

1. Daisy-chain the suggested number of UPQ loudspeakers for your subwoofer (see Table 2). Connect the output of the line driver to the Input of the first UPQ-1P, then connect the Loop output of the first UPQ-1P to the Input of the second (and so forth).
2. Connect the low or subwoofer output of the line driver to the subwoofer Input.
3. To minimized the gain in the frequency range where the UPQ-1P loudspeakers and subwoofer overlap, engage a low-cut filter for the signal routed to the UPQ-1P.
4. Configure the polarities for the loudspeakers:

- If a low-cut filter is engaged for the UPQ-1P loudspeakers, and the UPQs and subwoofer are coplanar or very close together (four feet or less), a reverse in the polarity for the subwoofer may be required.
- If the low-cut filter is engaged for the UPQ-1P loudspeakers, and the UPQs and subwoofer are more than four feet apart, the polarities may need to be reversed again to compensate for delay propagation. In these cases, a measurement system like Meyer Sound's SIM 3 is recommended to determine appropriate delay and polarity settings.

GALILEO LOUDSPEAKER MANAGEMENT SYSTEM

Meyer Sound's Galileo® loudspeaker management system is a comprehensive solution for driving and aligning loudspeaker systems, especially those comprised of Meyer Sound self-powered loudspeakers. The Galileo 616 is a two-space rack unit with six inputs and 16 low-latency outputs. Processing for the outputs includes gain, polarity, delay, high- and low-pass filters, equalization (parametric and TruShaping), and atmospheric correction.

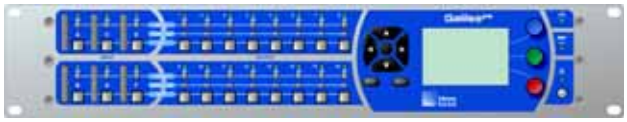

Galileo 616

The Galileo 616 can be controlled from its intuitive front panel or from the extensive Compass™ software running on a Windows or Mac® computer. The Galileo system also interfaces seamlessly with Meyer Sound's SIM 3 audio analyzer.

USING DIGITAL SIGNAL PROCESSORS

Full-range signals can be connected directly to Meyer Sound self-powered loudspeakers because the loudspeakers have built-in active crossovers. External crossovers and digital signal processors are optional and should be used with caution as they can introduce phase shifts that cause destructive cancellations.

If a digital signal processor is used, both the UPQ-1P loudspeakers and subwoofer should be driven from the same processor to keep their delay times the same. Otherwise a phase shift between the UPQs and subwoofer may be encountered. In addition, you should verify the delay time between channels: some digital signal processors may incur channel-to-channel delays when the processor is near maximum throughput, which becomes more likely as the number of filters in use by the processor is increased.

In no case should a filter higher than the 2nd order be used on source signals. The additional phase shift introduced by these filters deteriorates the impulse response, and the higher roll-off does not improve crossover interaction.

In addition, when using third-party digital signal processors to filter source signals, it is highly recommended that the filter be configured to emulate the low-cut filter used by Meyer Sound's LD-1A and LD-2.

LD-1A and LD-2 Low-Cut Filter Parameters

Type	Order	Pole Frequency	Q
High Pass	2nd (–12dB/oct)	162 Hz	0.82*

**If the digital signal processor does not have variable Q for high-pass filters, the filter should be set to "Butterworth" (Q ≅ .7).*

If loudspeakers will be driven directly from a digital signal processor, make sure the signal is sufficient to drive the total load impedance of the connected loudspeakers (see "Loop Connector" on page 15).

TIP: To address the collective concerns of system design verification, subwoofer integration, digital signal processors, delay systems, and acoustical conditions, a measurement system like Meyer Sound's SIM 3 is strongly recommended.

CHAPTER 5: QUICKFLY RIGGING

The UPQ-1P loudspeaker is compatible with Meyer Sound's QuickFly system, a comprehensive collection of custom-designed rigging, flying, and mounting options. Comprised of rugged, reliable, and easy-to-configure components, QuickFly lets you deploy UPQ-1P loudspeakers as either individual loudspeakers or as arrays at precise angles to take full advantage of their directional components. The top and bottom plates for the UPQ cabinet are constructed of heavy-duty, high-strength, corrosion-resistant 6061-T6 aluminum and include threaded metric holes (for M10 screws) for easy connection to QuickFly rigging and third-party mounting options.

Important Safety Considerations!

When installing Meyer Sound loudspeakers, the following precautions should always be observed:

- All Meyer Sound products must be used in accordance with local, state, federal, and industry regulations. It is the owner's and user's responsibility to evaluate the reliability of any rigging method for their application. Rigging should only be carried out by experienced professionals.
- Use mounting and rigging hardware that has been rated to meet or exceed the weight being hung.
- Make sure to attach mounting hardware to the building's structural components (studs or joists), and not just to the wall surface. Verify that the building's structure and the anchors used for the installation will safely support the total weight of the mounted loudspeakers.
- Use mounting hardware appropriate for the surface where the loudspeaker will be installed.
- Make sure bolts and eyebolts are tightened securely. Meyer Sound recommends using Loctite® on eyebolt threads and safety cables.
- Inspect mounting and rigging hardware regularly. Immediately replace any worn or damaged components.

BASIC EYEBOLT RIGGING

The UPQ-1P loudspeaker ships with two M10 threaded, 25 mm eyebolts, which attach to the top or bottom of the loudspeakers and can be used to suspend them. A minimum of two eyebolts are required when suspending a single loudspeaker. The use of two eyebolts provides the added flexibility of aiming and titling the loudspeaker for targeted coverage.

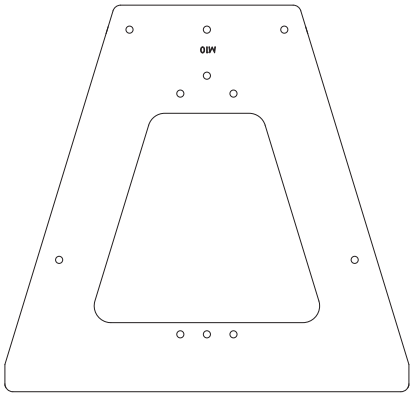

UPQ-1P Top Plate with Threaded Holes for Eyebolts

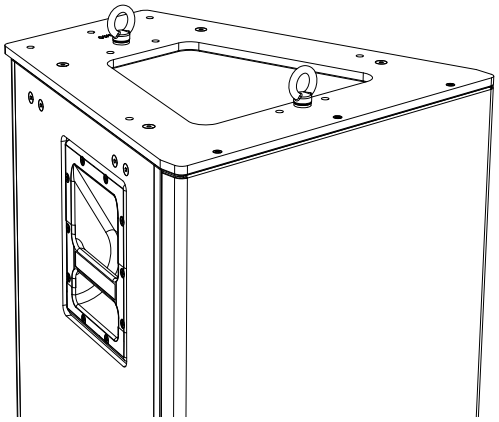

UPQ-1P with Two Eyebolts

NOTE: Up to two UPQ-1P loudspeakers, oriented vertically, can be suspended with Meyer Sound eyebolts at a 7:1 safety factor. For this configuration, the top loudspeaker would have two eyebolts installed on its top plate and two eyebolts installed on its bottom plate, for connecting to the second loudspeaker. Additional M10 eyebolts (PN 40.185.013.01 for a set of 2) are available from Meyer Sound.

POLE-MOUNTING THE UPQ-1P

You can mount a single UPQ-1P loudspeaker on a heavy-duty loudspeaker stand with standard a 1-1/2” pole using its integral pole mount receptacle. The load rating for the stand must meet or exceed the weight of the UPQ-1P loudspeaker (108 lbs; 49 kg) and be installed according to the manufacturer’s instructions.

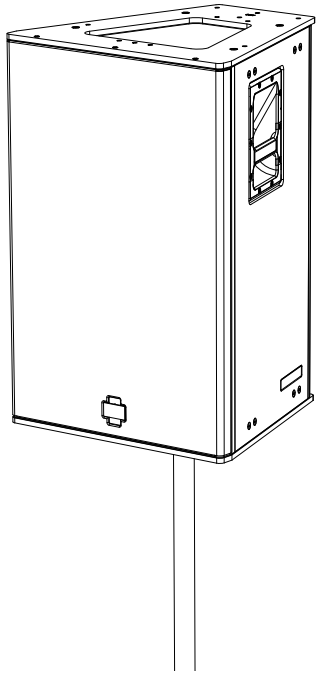

UPQ-1P Mounted on Pole

CAUTION: Make sure the pole is designed to support the total weight of the UPQ-1P loudspeaker and observe all safety precautions specified by the pole manufacturer.

THE MYA-UPQ MOUNTING YOKE

The MYA-UPQ (PN 40.185.052.01) mounting yoke suspends a single UPQ-1P loudspeaker and allows a wide range of horizontal and vertical adjustment. The mounting yoke’s bottom bar attaches to the bottom plate of the loudspeaker with two M10 mounting screws (included). A “C” or “G” hanging clamp and steel safety cable (not included) are required to suspend the MYA-UPQ mounting yoke.

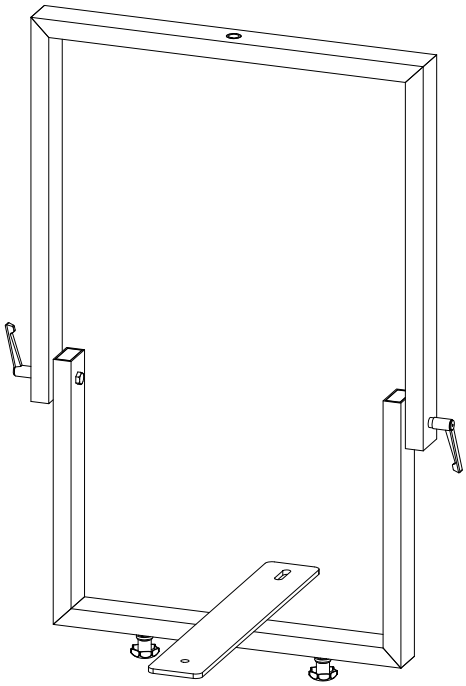

MYA-UPQ Mounting Yoke

NOTE: The top bar of MYA-UPQ mounting yoke accommodates hanging clamps with standard 1/2-inch or 12 mm bolts.

THE MPA-UPQ ARRAY ADAPTER

The MPA-UPQ array adapter provides a solid connection between UPQ-1P loudspeakers to form horizontal and vertical arrays of up to three loudspeakers. The six M10 screw holes at the front of the adapter plate are used to adjust the distance between the loudspeakers to achieve the desired splay angle (from 34° to 50°) and coverage. The adapter plate has three rows of shackle holes that offer the flexibility of flying horizontal and vertical arrays, as well as single loudspeakers.

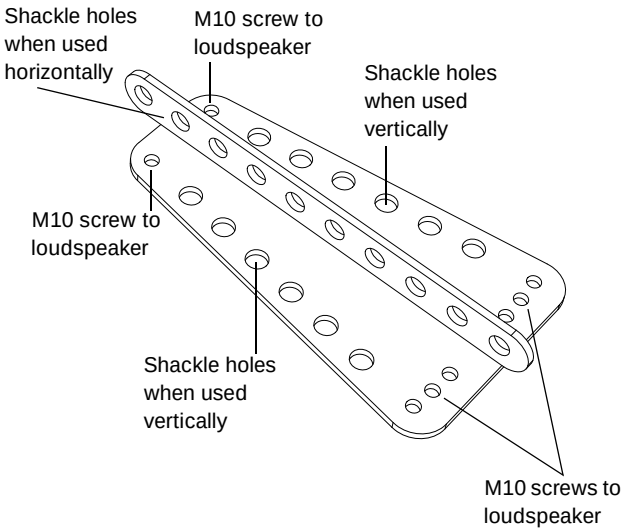

MPA-UPQ Array Adapter Plate

The MPA-UPQ array adapter kit (PN 40.185.054.01) includes two plates and eight M10 knobs and washers. A single kit can create an array of two UPQ-1P loudspeakers; two kits are required for an array of three loudspeakers.

Arrays are assembled by attaching the array adapter plates to the top and bottom plates of the UPQ-1P and securing them with the included M10 knobs and washers.

CAUTION: The MPA-UPQ array adapter supports a maximum of three UPQ-1P loudspeakers in an array.

Suspending Single Loudspeakers Vertically with the MPA-UPQ

A single MPA-UPQ array adapter plate can be used to suspend a single UPQ-1P loudspeaker vertically. The adapter plate attaches to the top center of the loudspeaker with the included M10 knobs. Shackles attach to the adapter plate's middle shackle holes (oriented up).

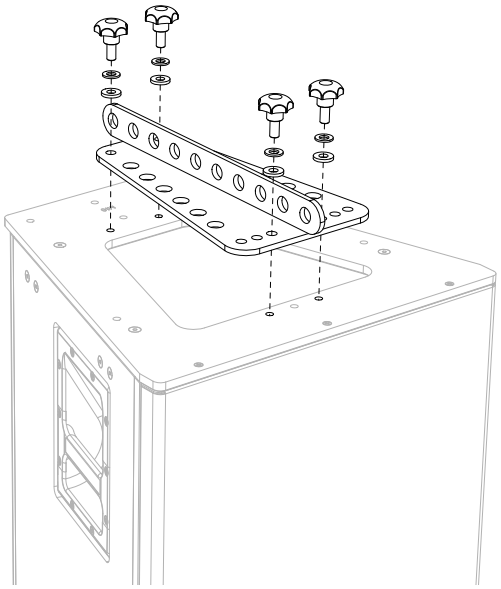

Attaching an Array Adapter Plate

TIP: A second MPA-UPQ array adapter plate attached to the bottom can be used to pull back for severe down tilt angles using the last shackle hole.

Suspending Single Loudspeakers Horizontally with the MPA-UPQ

Two MPA-UPQ array adapter plate can be used to suspend a single UPQ-1P loudspeaker horizontally. The adapter plates attach to the top and bottom edges of the loudspeaker with the included M10 knobs. Shackles attach to the adapter plate's side shackle holes (oriented up).

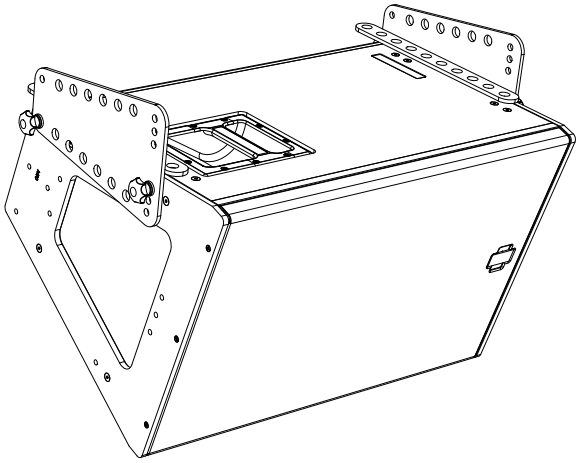

MPA-UPQ Suspending a Single Loudspeaker Horizontally

Horizontal Arrays with the MPA-UPQ

MPA-UPQ horizontal arrays are constructed by placing adapter plates on the tops and bottoms of the loudspeakers between each loudspeaker. The adapter plates are oriented with the middle shackle row up.

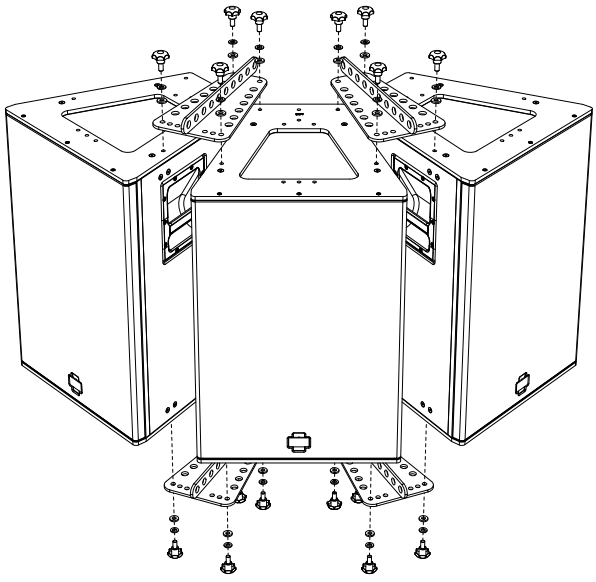

MPA-UPQ, Horizontal Array

Vertical Arrays with the MPA-UPQ

MPA-UPQ vertical arrays are constructed by placing adapter plates on the tops and bottoms of the loudspeakers between each loudspeaker. The adapter plates are oriented with the middle shackle row in.

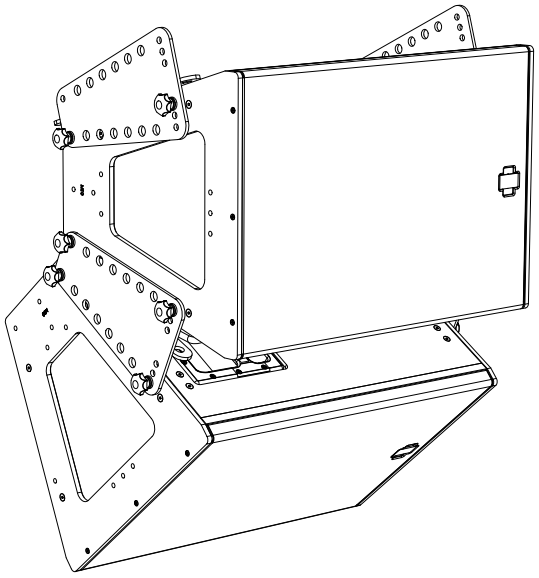

MPA-UPQ, Vertical Array

NOTE: For a list of available splay angles for arrayed UPQ-1P loudspeakers, see "MPA-UPQ Splay Angles for Arrayed Loudspeakers" on page 27.

NOTE: Optimal acoustical performance for a UPQ array is achieved by using the adequate number of units as well as selecting the specific angles between cabinets to fill the requirements of the application. In general larger angles can create a hole in the coverage and smaller angles can create too much interaction.

NOTE: MAPP Online Pro, covered in greater detail in Chapter 6, is the tool of choice to enable you to make accurate and comprehensive predictions for optimal coverage(s) during the design phase.

MPA-UPQ Splay Angles for Arrayed Loudspeakers

The MPA-UPQ array adapter plate has six different M10 screw holes for adjusting the splay angle for arrayed UPQ-1P loudspeakers. The following illustrations show the possible splay angles for arrayed loudspeakers.

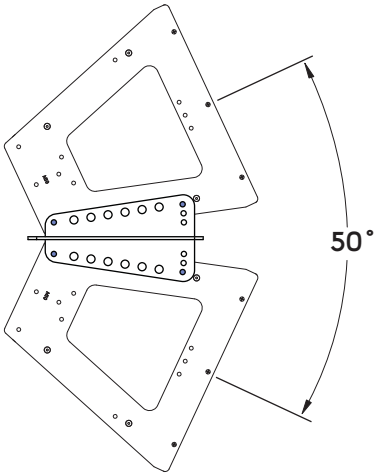

MPA-UPQ with Loudspeakers Arrayed at 50°

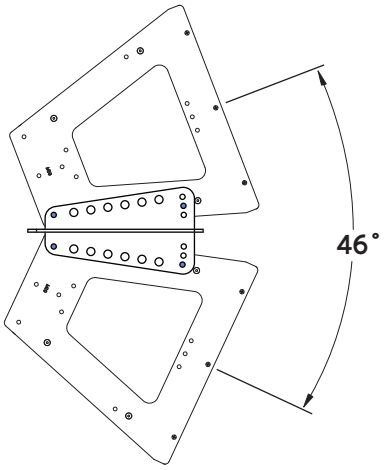

MPA-UPQ with Loudspeakers Arrayed at 46°

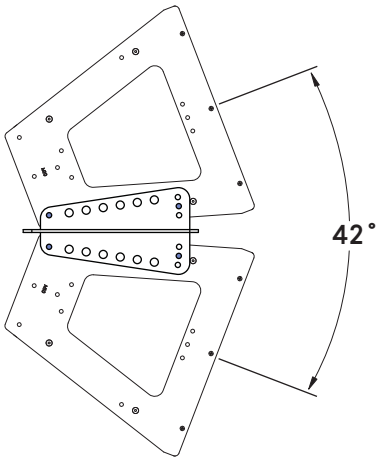

MPA-UPQ with Loudspeakers Arrayed at 42°

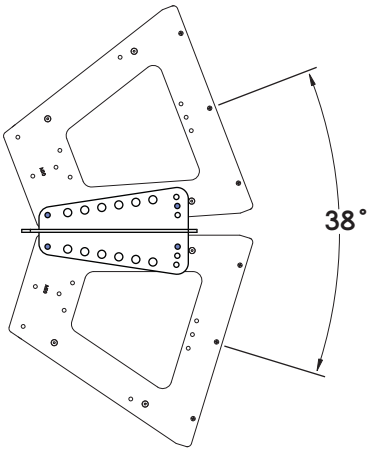

MPA-UPQ with Loudspeakers Arrayed at 38°

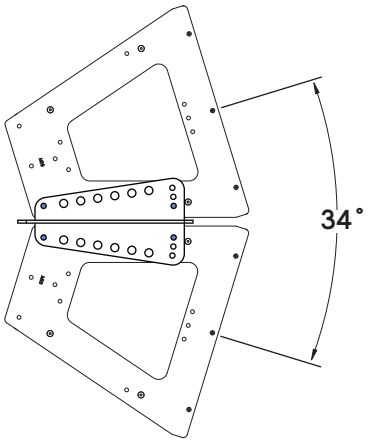

MPA-UPQ with Loudspeakers Arrayed at 34°

CHAPTER 6: THE RMS REMOTE MONITORING SYSTEM

An optional RMS remote monitoring system module can be installed in the UPQ-1P loudspeaker, allowing the loudspeakers to be connected to an RMS network. RMS allows real-time monitoring of multiple Meyer Sound self-powered loudspeakers from a Windows-based computer. The RMS host computer communicates with Meyer Sound loudspeakers (equipped with RMS modules) via a simple twisted pair network, or an Ethernet network using an FT-10 to Ethernet adapter.

NOTE: Optional loudspeaker Mute and Solo functions are helpful for acoustic setup or troubleshooting. A jumper is installed in the optional RMS communication board inside the UPQ amplifier to enable Mute and/or Solo functionality. To use these features, the software needs to be enabled as well.

NOTE: The RMS software allows you to disable Mute and Solo functions to eliminate any chance of an operator error (a muting error, for example). However, these functions can be disabled permanently by removing the jumper in the RMS communication board.

NOTE: RMS does not control AC power.

THE RMS SOFTWARE

The optional RMS software provides extensive system status and performance data for each loudspeaker, including amplifier voltage, limiting activity, power output, fan and driver status, as well as mute and solo capability. Loudspeakers are added to the RMS network and assigned a node name during a one-time commissioning procedure where the loudspeaker is identified by either entering its unique Neuron ID, or by pressing its Service button.

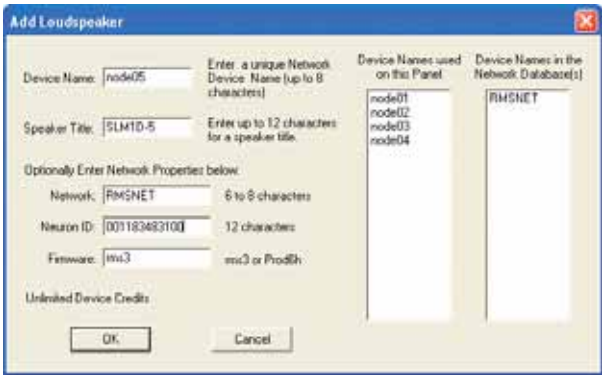

RMS Add Loudspeaker Dialog Box

Once loudspeakers are identified on the RMS network, they appear in the RMS software as icons and views; they are also automatically added to the RMS database on the host computer. The RMS state for each loudspeaker is retained on its RMS module.



UPQ-1P RMS Icon

The RMS software displays all loudspeakers on the network in a panel with icons, Meter views, and Text views that can be customized to suit your needs. Loudspeaker data is updated 2–5 times per second. Individual loudspeakers can be physically identified with the Wink option in RMS, which lights the Wink LED on the RMS module for that particular loudspeaker. Conversely, a loudspeaker can be identified in the RMS software by pressing the Service button on the loudspeaker's RMS module.

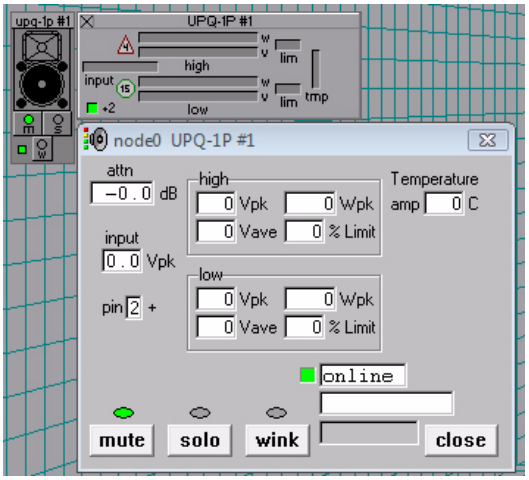

RMS User Panel

Loudspeaker icons and views can be arranged to represent how the loudspeakers have been deployed in the system. Multiple panels can be saved and recalled for specific performances and venues.

NOTE: When the heatsink for the UPQ-1P reaches 85° C (185° F), the On/Temp LED turns red, while their loudspeaker icons in the RMS software turn yellow — indicating the loudspeaker is running hot, but still within safe operating limits. Make sure that the loudspeaker is properly ventilated.

THE RMS MODULE

The RMS module is installed in the bottom slot of the user panel on the back of the Meyer Sound loudspeaker. The RMS user panel has three LEDs, two buttons, and two Network connectors.



RMS Module

NOTE: The LEDs and buttons on the RMS user panel are used exclusively by RMS and have no effect on the acoustical or electrical activity of the UPQ-1P loudspeaker, unless Mute and Solo are enabled for the loudspeaker.

Service LED (Red)

The red Service LED provides the following feedback:

- When unlit, the loudspeaker is successfully connected to the network and commissioned.
- When blinking once every two seconds, the loudspeaker is connected to the network but not yet commissioned in the RMS software.
- When lit continuously, the loudspeaker's RMS hardware has failed and may indicate that the module has been damaged (contact Meyer Sound Technical Support).

Service Button

Pressing the Service button identifies the loudspeaker on the RMS network and notifies the RMS software that the loudspeaker is connected. When the Service and Reset buttons are pressed at the same time, the card is decommissioned from the network and the red Service LED blinks.

Wink LED (Green)

The green Wink LED lights up when a signal is sent from the RMS software by clicking the Wink button on the loudspeaker's icon or on its Text view. This is useful for identifying the physical loudspeaker corresponding to a loudspeaker icon in the RMS software.

Reset Button

Pressing the Reset button causes the RMS module's firmware to reboot; this will not affect whether the loudspeaker is commissioned (which is stored in flash memory). When the Reset and Service buttons are pressed at the same time, the card is decommissioned from the network and the red Service LED blinks.

Activity LED (Green)

The green Activity LED flashes continuously when the loudspeaker has been successfully commissioned.

Network Connectors

The two bi-directional Weidmuller locking connectors transfer data to and from the RMS network. Two connectors are provided to allow for easy connection of multiple (daisy-chained) loudspeakers on the network.

CHAPTER 7: SYSTEM DESIGN AND INTEGRATION TOOLS

Meyer Sound offers two comprehensive tools to assist with the acoustical and functional requirements of system design and optimization. This chapter introduces you to MAPP Online Pro, Meyer Sound's patented online acoustical prediction tool, and SIM 3, a comprehensive system for measurement and analysis.

MAPP ONLINE PRO

MAPP Online Pro is a powerful, cross-platform, Java-based application for accurately predicting the coverage pattern, frequency response, impulse response, and maximum SPL output of single or arrayed Meyer Sound loudspeakers.

Residing on your local computer, the MAPP Online Pro client lets you configure Meyer Sound loudspeaker systems and define the environment in which they will operate, including air temperature, pressure, humidity, and even the location and composition of walls. CAD (DXF) files containing detailed venue information can also be imported.

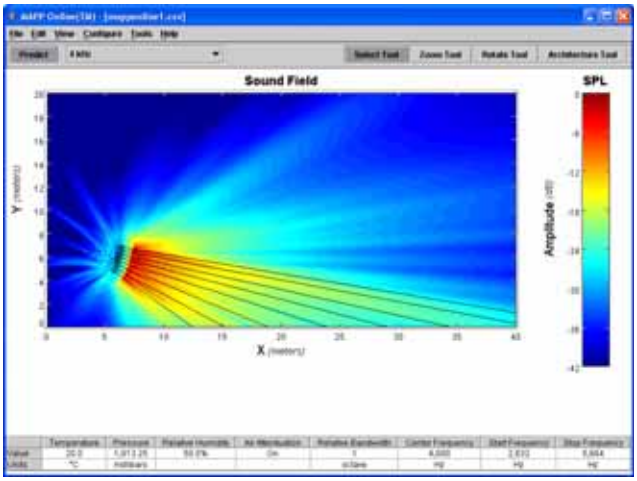

MAPP Online Pro

Whether planning for fixed installations or tours with multiple venues, sound system designers can use MAPP Online Pro to accurately predict the appropriate loudspeaker deployment for each job, complete with coverage data, system delay and equalization settings, rigging information, and detailed design illustrations. MAPP Online Pro's accurate, high-resolution predictions ensure that systems will perform as expected, thereby eliminating unexpected coverage problems and minimizing on-site adjustments.

The key to the accuracy of MAPP Online Pro's predictions is its exhaustive database of Meyer Sound loudspeaker measurements. Performance predictions for each loudspeaker are based on 360 1/48th-octave-band measurements taken with a SIM audio analyzer in the Meyer Sound anechoic chamber. The extraordinary consistency between Meyer Sound loudspeakers guarantees that predictions from MAPP Online Pro will closely match their actual performance.

MAPP Online Pro predictions are requested by the client software and sent via the Internet to the high-speed Meyer Sound servers where high-resolution (magnitude and phase) polar data is processed with sophisticated acoustical prediction algorithms. The resulting predictions are then returned to and displayed on the local computer running the MAPP Online Pro client software.

MAPP Online Pro Applications

With MAPP Online Pro, you can:

- Simulate different loudspeaker configurations to refine system design and zero-in on the best coverage for intended audience areas
- Monitor loudspeaker interactions to locate destructive interferences so that loudspeakers can be re-aimed and repositioned as necessary
- Place microphones anywhere in the sound field and predict their frequency response, impulse response, and sound pressure
- Determine delay settings for fill loudspeakers
- Try out virtual Galileo equalization to determine optimum real-world settings for the best system response
- Automatically calculate load information for arrays to determine rigging capacities, front-to-back weight distribution, and center of gravity
- Generate and export system images for client presentations

Using MAPP Online Pro

MAPP Online Pro is compatible with the following operating systems:

- Windows
- Linux®
- Unix®
- Mac OS® 10.4 and later

Additional system requirements and recommendations are available on the MAPP Online Pro website:

http://www.meyersound.com/products/mapponline/pro/

Downloading and Installing MAPP Online Pro

To use MAPP Online Pro, you can register at the following link:

http://www.meyersound.com/products/mapponline/pro/register/

After entering your registration information, an email will be sent to you with your user name, password, and the MAPP Online Pro download location. On-screen instructions will guide you through the download and installation process.

The MAPP Online Pro client software is regularly upgraded to add support for the latest Meyer Sound loudspeakers, as well as to add feature enhancements. Most upgrades are downloaded automatically when logging on to a MAPP Online Pro session. The MAPP Online Pro database includes nearly all of the current Meyer Sound loudspeakers, subwoofers, and processors.

THE SIM 3 MEASUREMENT SYSTEM

The SIM 3 audio analyzer is a high-resolution audio measurement system comprised of software, hardware, microphones, and accessory cables. SIM 3 is optimized for measuring audio frequencies with resolutions up 1/48th of an octave, allowing you to apply precise corrections to balance system response using frequency and phase domain information.

Source Independent Measurement Technique

The SIM 3 audio analyzer implements Meyer Sound's source independent measurement technique, a dual-channel method that accommodates statistically unpredictable excitation signals. Any excitation signal within a desired frequency range can be used to obtain highly accurate measurements for acoustical or electronic systems. For example, concert halls and loudspeaker systems can be captured during a performance and used as a SIM 3 test signal, so you can:

- View measurement data as amplitude versus time (impulse response) or amplitude and phase versus frequency (frequency response)
- Utilize a single-channel spectrum mode
- View frequency domain data with a logarithmic frequency axis
- Determine and internally compensate for propagation delays using the SIM 3 Delay Finder

SIM 3 Applications

SIM 3's main applications are testing and aligning loudspeaker systems, which entails:

- Measuring propagation delays between subsystems to determine appropriate polarities and delay times
- Measuring variations in frequency response caused by the acoustical environment and the placement and interaction of loudspeakers to determine corrective equalization
- Optimizing subwoofer integrations
- Optimizing loudspeaker arrays

SIM 3 can also be used in the following applications:

- Microphone calibration and equalization
- Transducer evaluation and correction
- Echo detection and analysis
- Vibration analysis
- Architectural acoustics
- Underwater acoustics

APPENDIX A: OPTIONAL VEAM MULTIPIN CONNECTOR

The UPQ-1P loudspeaker requires a grounded outlet. It is very important that the system be properly grounded in order to operate safely and properly. Figure 3 illustrates correct wiring for the creation of power cables and distribution systems for UPQ-1P loudspeakers equipped with VEAM multipin connectors.

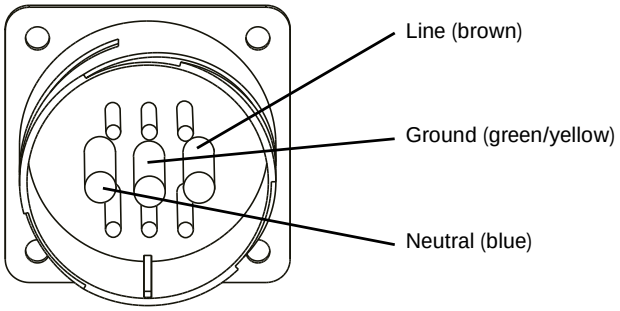

Figure 3: VEAM Multipin Connector Pin-Outs for Power

For complete wiring conventions and pin-outs for AC, audio, and RMS connections, refer to the Meyer Sound document VEAM Cable Wiring Reference (PN 06.033.113.01).

Meyer Sound offers the VIM-4 VEAM interface module with four VEAM connectors in the front and a single-phase IEC 309 32-amp connector in the rear to distribute power, audio, and RMS to UPQ systems equipped with VEAM connectors.

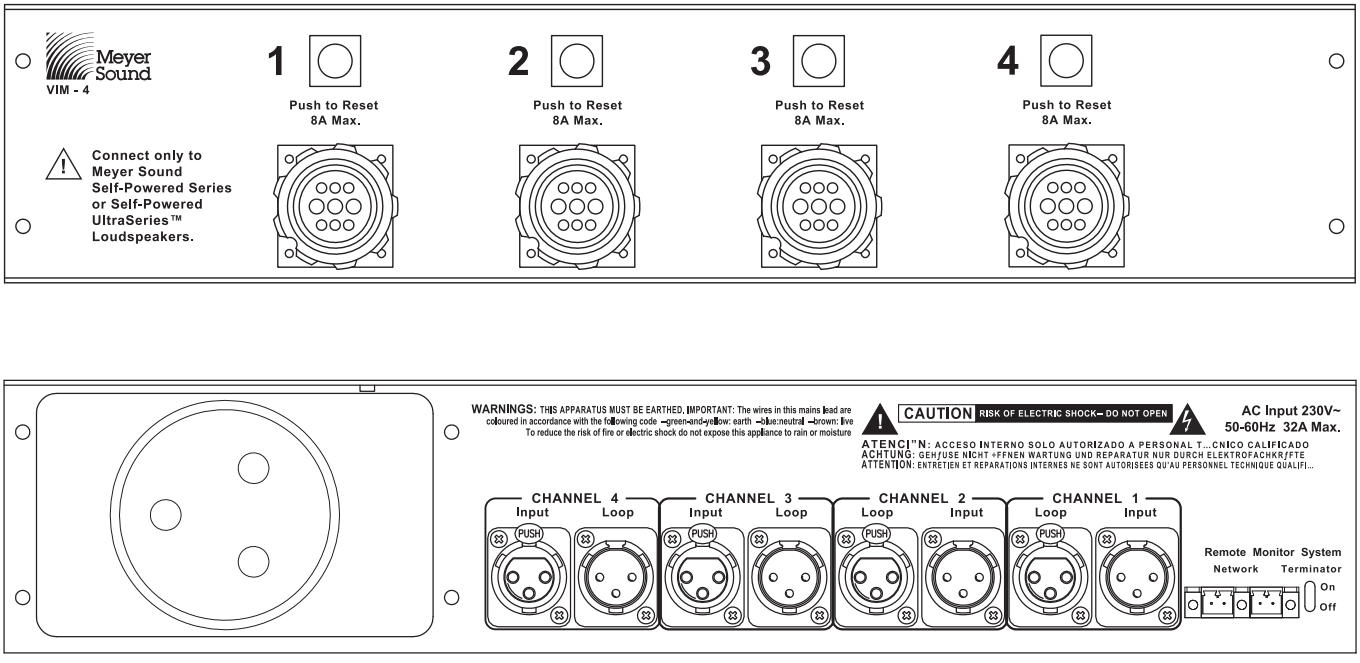

VIM-4 Module, Front and Rear Panels

APPENDIX B: UPQ-1P SPECIFICATIONS

ACOUSTICAL	
Operating Frequency Range	55 Hz – 18 kHz **Note:** Recommended maximum operating frequency range. Response depends on loading conditions and room acoustics.
Frequency Response	60 Hz – 16 kHz ±4 dB **Note:** Measured free field with 1/3 octave frequency resolution at 4 meters.
Phase Response	470 Hz to 16 kHz ±45°
Maximum Peak SPL	136 dB **Note:** Measured with music referred to 1 meter.
Dynamic Range	>110 dB
Coverage	80° x 50° (–6 dB); 100° x 60° (–10 dB)
Crossover	770 Hz **Note:** At this frequency, the transducers produce equal sound pressure levels.
TRANSDUCERS	
Low Frequency	One 15” cone driver with neodymium magnet Nominal impedance: 2 Ω Voice coil size: 4” Power-handling capability: 1200 W (AES) **Note:** Power handling measured using AES standards: transducer driven continuously for two hours with band limited noise signal having a 6 dB peak-average ratio.
High Frequency	One 4” compression driver Nominal impedance: 8 Ω Voice coil size: 4” Diaphragm size: 4” Exit size: 1.5” Power-handling capability: 250 W (AES) **Note:** Power handling measured using AES standards: transducer driven continuously for two hours with band limited noise signal having a 6 dB peak-average ratio.
AUDIO INPUT	
Type	Differential, electronically balanced
Maximum Common Mode Range	±15 V DC, clamped to earth for voltage transient protection
Connectors	Female XLR input with male XLR loop output or VEAM all-in-one (integrates AC power, audio, and network)
Input Impedance	10 kΩ differential between pins 2 and 3
Wiring	Pin 1: Chassis/earth through 220 kΩ, 1000 pF, 15 V clamp network to provide virtual ground lift at audio frequencies Pin 2: Signal + Pin 3: Signal – (optional polarity reversal switch) Case: Earth ground and chassis **Note:** An additional input module option is available with a polarity reversal switch and an attenuator (0 dB to –18 dB).
DC Blocking	Differential DC blocking up to maximum common mode voltage
CMRR	>50 dB, typically 80 dB (50 Hz – 500 Hz)
RF Filter	Common mode: 425 kHz Differential mode: 142 kHz

TIM Filter	<80 kHz, integral to signal processing
Nominal Input Sensitivity	0 dBV (1 V rms, 1.4 V peak) continuous average is typically the onset of limiting for noise and music
Input Level	Audio source must be capable of producing +20 dBV (10 V rms, 14 V peak) into 600 Ω to produce maximum peak SPL over the operating bandwidth of the loudspeaker
AMPLIFIER	
Type	Two-channel complementary MOSFET output stages (class AB/H)
Output Power	1275 W total (1 x 1000 W, 1 x 125 W) **Note:** Wattage rating is based on the maximum unclipped burst sine-wave rms voltage the amplifier will produce into the nominal load impedance.
Total Output	2550 W peak **Note:** Peak power based on the maximum unclipped peak voltage that the amplifier will produce for at least 100 milliseconds into the nominal load impedance.
THD, IM TIM	<.02%
Load Capacity	2 Ω low channel, 8 Ω high channel
Cooling	Convection at low to mid audio levels; fan-assisted only at high audio levels **Note:** The fan is controlled by audio level. It remains off at turn-on and at low to mid audio levels. Operating only at high audio levels makes it virtually inaudible.
AC POWER	
Connectors	PowerCon with looping output or VEAM all-in-one (integrates AC power, audio, and network)
Voltage Selection	Automatic, two ranges, each with high-low voltage tap (uninterrupted)
Safety Agency Rated Operating Voltage	95 V AC - 125 V AC; 208 V AC - 235 V AC; 50/60 Hz
Turn On/Turn Off Points	85 V AC – 134 V AC; 165 V AC - 264 V AC
Note: No automatic turn-off voltages. Voltages above 265 V AC are fuse protected but may cause permanent damage to the power supply. Voltages below 90 V AC may result in intermittent operation.	
Current Draw	
Idle Current	0.5 A rms (115 V AC); 0.28 A rms (230 V AC); 0.56 A rms (100 V AC)
Maximum Long-Term Continuous Current	3.9 A rms (115 V AC); 2.0 A rms (230 V AC); 4.4 A rms (100 V AC)
Burst Current	7.0 A rms (115 V AC); 3.9 A rms (230 V AC); 8.2 A rms (100 V AC) **Note:** AC power cabling must be of sufficient gauge so that under burst current rms conditions, cable transmission losses do not drop voltage below specified operating range at the speaker.
Ultimate Short-Term Peak Current	18.0 A peak (115 V AC); 10.5 A peak (230 V AC); 20.0 A peak (100 V AC)
Inrush Current	6.0 A peak (115 V AC); 8.4 A peak (230 V AC); 7.1A peak (100 V AC)
Note: Current draw for a single loudspeaker. Loop output not used.	
PHYSICAL	
Enclosure	Multi-ply hardwood
Finish	Black textured
Protective Grille	Powder-coated, hex-stamped steel black mesh screen
Rigging	Aluminum end plates on top and bottom with metric M10 threaded points; integral 1-1/2" (38 mm) pole mount receptacle on bottom

Dimensions	19.00" w x 28.27" h x 18.18" d (483 mm x 718 mm x 462 mm)
Weight	Weight 108 lbs (49 kg)

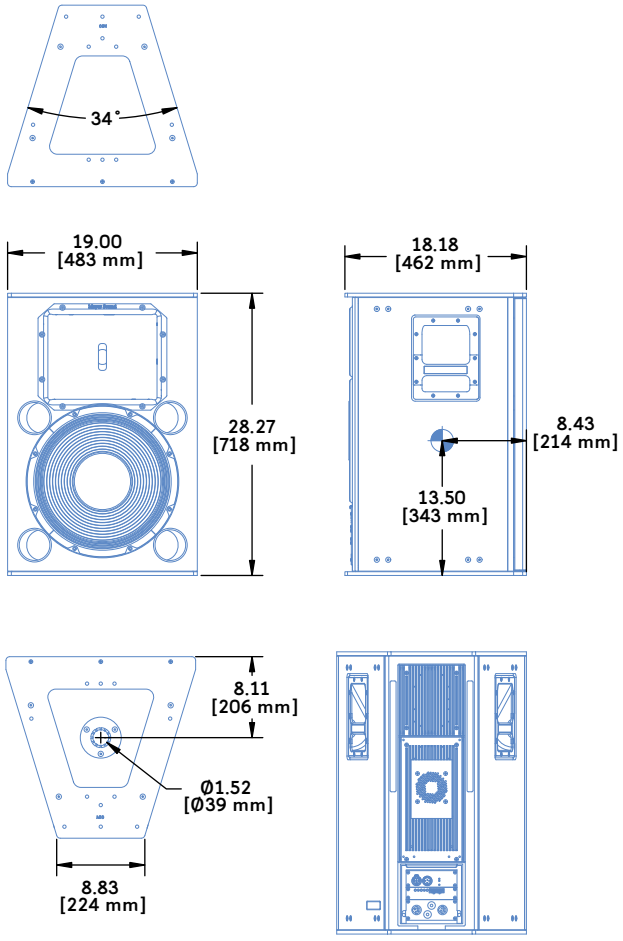

UPQ-1P Dimensions

thinking sound

Meyer Sound Laboratories Inc.
2832 San Pablo Avenue
Berkeley, CA 94702

www.meyersound.com
T: +1 510 486.1166

© 2008
Meyer Sound Laboratories Inc.
05.185.005.01 A2