UPJunior™ UltraCompact VariO™ Loudspeaker



Keep these important operating instructions.
Check www.meyersound.com for updates.

DECLARATION OF CONFORMITY ACCORDING TO ISO/IEC GUIDE 22 AND EN 45014

Manufacturer's Name:
Meyer Sound Laboratories Inc.

Manufacturer's Address:
2832 San Pablo Avenue
Berkeley, CA 94702-2204, USA

Declares that the products
Product Name: UPJunior
Product Options: All

Conforms to the following Product Specifications
Safety: EN 60065: 2002
IEC 60065: 2002
EMC: EN 55103-1: 1997 emission (1)
EN 55103-2: 1997 immunity (2)

This device complies with EN 55103-1 & -2. Operation is subject to the following two conditions:
(1) this device may not cause harmful interference, and
(2) this device must accept any interference received, including interference that may cause undesired operation.

Supplementary Information
The product herewith complies with the requirements of the Low Voltage Directive 73/23/EEC and the EMC Directive 89/336/EEC.

Office of Quality Manager
Berkeley, California USA
May 1, 2007

European Contact: Your local Meyer Sound dealer or Meyer Sound Germany, GmbH. Carl Zeiss Strasse 13, 56751 Polch, Germany. Telephone: 49.2654.9600.58 Fax: 49.2654.9600.59

Environmental specifications for Meyer Sound Electronics products

Operating Temperature	0° C to +45° C
Non operating Temperature	<–40° C or >+75° C
Humidity	to 95% at 35° C
Operating Altitude	to 4600 m (15,000 ft)
Non operating Altitude	to 6300 m (25,000 ft)
Shock	30 g 11 msec half-sine on each of 6 sides
Vibration	10–55 Hz (0.010 m peak-to-peak excursion)

Made by Meyer Sound Laboratories
Berkeley, California USA
European Office:
Meyer Sound Lab. GmbH
Carl Zeiss Strasse 13
56751 Polch, Germany
CE

TÜV Rheinland of North America, Inc.
C US

N775

© 2007
Meyer Sound. All rights reserved.
UPJunior UltraCompact VariO Loudspeaker Operating Instructions

The contents of this manual are furnished for informational purposes only, are subject to change without notice, and should not be construed as a commitment by Meyer Sound Laboratories Inc. Meyer Sound assumes no responsibility or liability for any errors or inaccuracies that may appear in this manual. Except as permitted by applicable copyright law, no part of this publication may be reproduced, stored in a retrieval system, or transmitted, in any form or by any means, electronic, mechanical, recording or otherwise, without prior written permission from Meyer Sound.

Compass, Galileo, Intelligent AC, MAPP Online Pro, RMS, UltraSeries, UPJunior, VariO, and all alpha-numeric designations for Meyer Sound products and accessories are trademarks of Meyer Sound. Meyer Sound, QuickFly, and SIM are registered trademarks of Meyer Sound Laboratories Inc. (Reg. U.S. Pat. & Tm. Off.). All third-party trademarks mentioned herein are the property of their respective trademark holders.

Printed in the USA.

Part Number: 05.173.005.01, Rev. A

SYMBOLS USED

These symbols indicate important safety or operating features in this booklet and on the chassis:

			
Dangerous voltages: risk of electric shock	Important operating instructions	Frame or chassis	Protective earth ground
Pour indiquer les risques résultant de tensions dangereuses	Pour indequer important instructions	Masse, châssis	Terre de protection
Warnung vor gefährlicher elektrischer Spannung	Wichtige Betriebsanweisung oder Gebrauchsanleitung	Rahmen oder Gehäuse	Masse Schutzleiter
Para indicar voltajes peligrosos	Instrucciones importantes de funcionamiento y/o manteniento	Armadura o chassis	Tierra proteccionista

IMPORTANT SAFETY INSTRUCTIONS

1. Read these instructions.
2. Keep these instructions.
3. Heed all warnings.
4. Follow all instructions.
5. Do not use this loudspeaker near water.
6. Clean only with dry cloth.
7. Do not block any ventilation openings. Install in accordance with Meyer Sound's installation instructions.
8. Do not install near any heat sources such as radiators, heat registers, stoves, or other apparatus that produce heat.
9. Do not defeat the safety purpose of the grounding-type plug. A grounding type plug has two blades and a third grounding prong. The third prong is provided for your safety. If the provided plug does not fit into your outlet, consult an electrician for replacement of the obsolete outlet.
10. Protect the power cord from being walked on or pinched, particularly at plugs, convenience receptacles, and the point where they exit from the loudspeaker. The AC mains plug or appliance coupler shall remain readily accessible for operation.
11. Only use attachments/accessories specified by Meyer Sound.
12. Use only with the caster rails or rigging specified by Meyer Sound, or sold with the loudspeaker. Handles are for carrying only.

    ⚠ **CAUTION:** Rigging should only be done by experienced professionals.

13. Unplug this loudspeaker during lightning storms or when unused for long periods of time.
14. Refer all servicing to qualified service personnel. Servicing is required when the loudspeaker has been damaged in any way, such as when the power-supply cord or plug has been damaged; liquid has been spilled or objects have fallen into the loudspeaker; rain or moisture has entered the loudspeaker; the loudspeaker has been dropped; or when for undetermined reasons the loudspeaker does not operate normally.

SAFETY SUMMARY

English

- To reduce the risk of electric shock, disconnect the loudspeaker from the AC mains before installing audio cable. Reconnect the power cord only after making all signal connections.
- Connect the loudspeaker to a two-pole, three-wire grounding mains receptacle. The receptacle must be connected to a fuse or circuit breaker. Connection to any other type of receptacle poses a shock hazard and may violate local electrical codes.
- Do not install the loudspeaker in wet or humid locations without using weather protection equipment from Meyer Sound.
- Do not allow water or any foreign object to get inside the loudspeaker. Do not put objects containing liquid on or near the unit.
- To reduce the risk of overheating the loudspeaker, avoid exposing it to direct sunlight. Do not install the unit near heat-emitting appliances, such as a room heater or stove.
- This loudspeaker contains potentially hazardous voltages. Do not attempt to disassemble the unit. The unit contains no user-serviceable parts. Repairs should be performed only by factory-trained service personnel.

Français

- Pour réduire le risque d'électrocution, débrancher la prise principale de l'haut-parleur, avant d'installer le câble d'interface allant à l'audio. Ne rebrancher le bloc d'alimentation qu'après avoir effectué toutes les connections.
- Branchez l'haut-parleur dans une prise de courant à 3 dérivations (deux pôles et la terre). Cette prise doit être munie d'une protection adéquate (fusible ou coupe-circuit). Le branchement dans tout autre genre de prise pourrait entraîner un risque d'électrocution et peut constituer une infraction à la réglementation locale concernant les installations électriques.
- Ne pas installer l'haut-parleur dans un endroit où il y a de l'eau ou une humidité excessive.
- Ne pas laisser de l'eau ou tout objet pénétrer dans l'haut-parleur. Ne pas placer de r´cipients contenant un liquide sur cet appareil, ni à proximité de celui-ci.
- Pour éviter une surchauffe de l'haut-parleur, conserver-la à l'abri du soleil. Ne pas installer à proximité d'appareils dégageant de la chaleur tels que radiateurs ou appareils de chauffage.
- Ce haut-parleur contient des circuits haute tension présentant un danger. Ne jamais essayer de le démonter. Il n'y a aucun composant qui puisse être réparé par l'utilisateur. Toutes les réparations doivent être effectuées par du personnel qualifié et agréé par le constructeur.

Deutsch

- Um die Gefahr eines elektrischen Schlages auf ein Minimum zu reduzieren, den Lautsprecher vom Stromnetz trennen, bevor ggf. ein Audio-Schnittstellensignalkabel angeschlossen wird. Das Netzkabel erst nach Herstellung aller Signalverbindungen wieder einstecken.
- Der Lautsprecher an eine geerdete zweipolige Dreiphasen-Netzsteckdose anschließen. Die Steckdose muß mit einem geeigneten Abzweigschutz (Sicherung oder Leistungsschalter) verbunden sein. Der Anschluß der unterbrechungsfreien Stromversorgung an einen anderen Steckdosentyp kann zu Stromschlägen führen und gegen die örtlichen Vorschriften verstoßen.
- Der Lautsprecher nicht an einem Ort aufstellen, an dem sie mit Wasser oder übermäßig hoher Luftfeuchtigkeit in Berührung kommen könnte.
- Darauf achten, daß weder Wasser noch Fremdkörper in das Innere den Lautsprecher eindringen. Keine Objekte, die Flüssigkeit enthalten, auf oder neben die unterbrechungsfreie Stromversorgung stellen.
- Um ein Überhitzen dem Lautsprecher zu verhindern, das Gerät vor direkter Sonneneinstrahlung fernhalten und nicht in der Nähe von wärmeabstrahlenden
- Haushaltsgeräten (z.B. Heizgerät oder Herd) aufstellen.
- Im Inneren diesem Lautsprecher herrschen potentiell gefährliche Spannungen. Nicht versuchen, das Gerät zu öffnen. Es enthält keine vom Benutzer reparierbaren Teile. Reparaturen dürfen nur von ausgebildetem Kundenienstpersonal durchgeführt werden.

Español

- Para reducir el riesgo de descarga eléctrica, desconecte de la red de voltaje el altoparlante antes de instalar el cable de señal de audio. Vuelva a conectar la alimentacion de voltaje una vez efectuadas todas las interconexiones de señalizacion de audio.
- Conecte el altoparlante a un tomacorriente bipolar y trifilar con neutro de puesta a tierra. El tomacorriente debe estar conectado a la protección de derivación apropiada (ya sea un fusible o un disyuntor). La conexión a cualquier otro tipo de tomacorriente puede constituir peligro de descarga eléctrica y violar los códigos eléctricos locales.
- No instale el altoparlante en lugares donde haya agua o humedad excesiva.
- No deje que en el altoparlante entre agua ni ningún objeto extraño. No ponga objetos con líquidos encima de la unidad ni cerca de ella.
- Para reducir el riesgo de sobrecalentamiento, no exponga la unidad a los rayos directos del sol ni la instale cerca de artefactos que emiten calor, como estufas o cocinas.
- Este altoparlante contiene niveles de voltaje peligrosos en potencia. No intente desarmar la unidad, pues no contiene piezas que puedan ser reparadas por el usuario. Las reparaciones deben efectuarse únicamente por parte del personal de mantenimiento capacitado en la fábrica.

CONTENTS

Chapter 1: Introduction 7

How to Use This Manual 7
Introducing the UPJunior™ Compact VariO™ Loudspeaker 7

Chapter 2: Power Requirements 9

The AC Connectors 9
Power Connector Wiring 9
UPJunior Voltage Requirements 10
UPJunior Current Requirements 10
Electrical Safety Issues 11

Chapter 3: Amplification and Audio 13

Audio Input Modules 13

Chapter 4: Adding Subwoofers to a UPJunior System 17

Adding Subwoofers by Daisy-Chaining 17
Adding Subwoofers with a Line Driver 18
Galileo™ Loudspeaker Management System 18
Using Digital Signal Processors 18

Chapter 5: The VariO Horn 21

Rotating the VariO Horn 21

Chapter 6: QuickFly® Rigging 23

Basic Eyebolt Rigging 23
Pole-Mounting the UPJunior 24
The MUB-UPJunior U-Bracket 24
The MYA-UPJunior Mounting Yoke 26
The MAAM-UPJunior Array Adapter 27

Chapter 7: The RMS™ Remote Monitoring System 31

The RMS Software 31
The RMS Module 32
Installing Mute and Solo Capability 32

Chapter 8: System Design and Integration Tools 33

MAPP Online Pro™ 33
The SIM® 3 Measurement System 34

Appendix A: Installing the Optional Rain Hoods 35

Appendix B: Basic Troubleshooting 37

Appendix C: UPJunior Specifications 39

CHAPTER 1: INTRODUCTION

HOW TO USE THIS MANUAL

Make sure to read these operating instructions in their entirety before configuring a loudspeaker system with UPJuniors. In particular, pay close attention to material related to safety issues.

As you read these operating instructions, you will encounter the following icons for notes, tips, and cautions:

NOTE: A note identifies an important or useful piece of information relating to the topic under discussion.

TIP: A tip offers a helpful tip relevant to the topic at hand.

CAUTION: A caution gives notice that an action may have serious consequences and could cause harm to equipment or personnel, or could cause delays or other problems.

Information and specifications are subject to change. Updates and supplementary information are available on the Meyer Sound® website:

http://www.meyersound.com

Meyer Sound Technical Support is available at:

- **Tel:** +1 510 486.1166
- **Fax:** +1 510 486.8356
- **Email:** techsupport@meyersound.com

INTRODUCING THE UPJUNIOR COMPACT VARIO LOUDSPEAKER

The UPJunior™ compact VariO™ loudspeaker combines the advantages of self-powered systems with the placement and arraying flexibility afforded by a VariO rotatable horn. Compact and lightweight, the UPJunior produces a robust peak power output of 126 dB SPL at 1 meter, making it suitable for use as either a primary loudspeaker in small rooms, or as a fill, delay, effects or under-balcony loudspeaker in small to medium-sized distributed systems.



UPJunior Compact VariO Loudspeaker

The UPJunior's low-frequency section employs an 8-inch neodymium magnet cone driver, while the high-frequency section uses a proprietary 0.75-inch exit, 2-inch diaphragm compression driver. The VariO horn can be easily rotated to provide an 80° x 50° coverage pattern with either a horizontal or vertical orientation. A two-channel class AB/Bridged power amplifier with complementary MOSFET output stages provides a total output of 300 watts for the low- and high-frequency sections. The optional RMS™ module allows comprehensive monitoring of all key system parameters from a Windows®-based computer.

The UPJunior's end plates — made of heavy-duty, high-strength, corrosion-resistant 6061-T6 aluminum — provide a wide range of mounting, flying, and arraying options. Strategically placed M8 threaded holes allow basic eyebolt hanging as well as easy connection to third-party pole-mounting options. QuickFly® rigging options, which include an array adapter (also made of 6061-T6 aluminum), yokes, and U-brackets, attach easily and securely to the UPJunior, allowing it to be mounted or flown as either a single cabinet or within arrays.



UPJunior with MYA-UPJunior Mounting Yoke



UPJuniors with MAAM-UPJunior Array Adapters and Eyebolts



UPJunior Pole-Mounted with Third-Party Pole Adapter

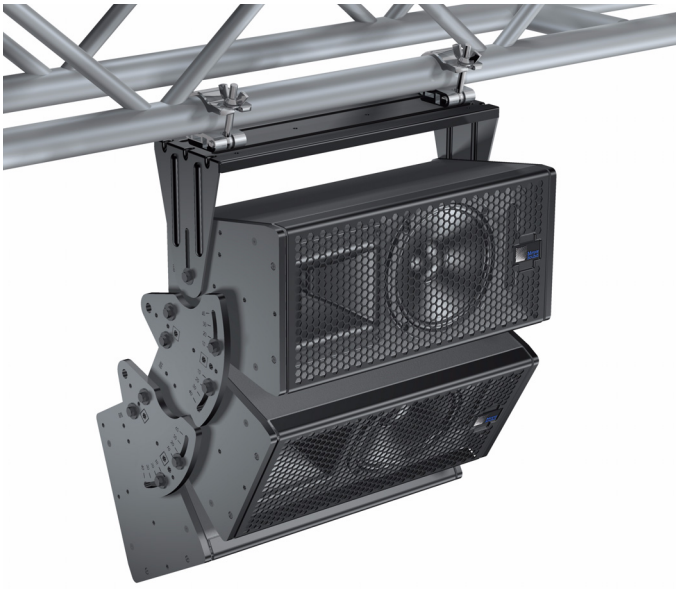

UPJunior Array with MUB-UPJunior U-Bracket, Truss Mounted

CHAPTER 2: POWER REQUIREMENTS

Self-powered and compact, the UPJunior loudspeaker combines advanced loudspeaker technology with equally advanced power capabilities. Understanding power distribution, voltage and current requirements, as well as electrical safety issues, is critical to the safe operation of the UPJunior.

THE AC CONNECTORS

The user panel on the back of the UPJunior includes the following AC connectors:



UPJunior AC Input (left) and AC Loop Output (right) Connectors

The AC Input Connector (Blue)

The blue AC Input connector supplies power to the UPJunior. The connector is rated at 20 amps and uses a PowerCon3 AC mains locking connector that prevents accidental disconnections. A 10-foot AC power cable, rated at 15 amps, is included with each UPJunior. If you replace the included AC power cable, make sure to use a cable with the appropriate power plug (on the other end) for the area in which you will operate the UPJunior.

The AC Input connector also supplies power to any additional loudspeakers connected to the UPJunior's gray Loop Output connector. Each UPJunior requires approximately 3 A rms maximum at 115 V AC for proper operation.

⚠ **CAUTION:** When using the included AC power cable, do not loop more than four additional UPJuniors from the AC Loop Output connector at 115 V (five total for the circuit), and not more than eight at 230 V (nine total for the circuit).

The AC Loop Output Connector (Gray)

The gray AC Loop Output connector allows multiple UPJuniors to be looped and powered from a single power source. Connect the AC Loop Output of the first UPJunior to the AC Input of the second UPJunior, and so forth. The AC Loop Output uses a PowerCon3 AC mains locking connector that prevents accidental disconnections.

The maximum number of UPJuniors that can be looped from the Loop Output connector is determined by the voltage of the power source, the circuit breaker rating, and the rating of the AC power cable connected to the first UPJunior.

Number of UPJuniors that Can Be Looped with AC Power

Circuit Breaker/ Connector Rating	115 V AC	230 V AC	100 V AC
15 amps	4 looped (5 total)	8 looped (9 total)	4 looped (5 total)
20 amps	6 looped (7 total)	11 looped (12 total)	6 looped (7 total)

Each UPJunior loudspeaker ships with one AC looping connector for making AC looping cables. Assembled AC looping cables are available from Meyer Sound.

⚠ **CAUTION:** Do not exceed the current capability of the UPJunior's 20-amp Input Connector. When looping loudspeakers, consider the total current draw for all loudspeakers on the circuit, including the first loudspeaker.

POWER CONNECTOR WIRING

The UPJunior requires a grounded outlet. To operate safely and effectively, it is extremely important that the entire system be properly grounded.

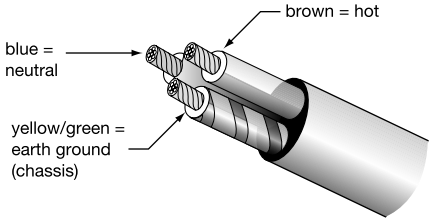

AC Cable Color Code

When wiring international or special-purpose power connectors:

- Connect the blue wire to the black terminal, or the terminal marked with an N.
- Connect the brown wire to the red terminal, or the terminal marked with an L.
- Connect the yellow and green wire to the green (or green and yellow) terminal, or the terminal marked with an E.

CAUTION: When creating AC power cables and distribution systems, it is important to preserve AC line polarity and connect earth ground on both ends of the cable. UPJunior loudspeakers require a grounded connection. Always use a grounded outlet and plug. It is extremely important that the system be properly grounded in order to operate safely and properly. Do not ground-lift the AC cable.

UPJUNIOR VOLTAGE REQUIREMENTS

The UPJunior operates safely and continuously when the AC voltage stays within 90–264 V AC at 50 or 60 Hz. The loudspeaker also allows any combination of voltage to GND (neutral-line-ground or line-line-ground).

If the voltage drops below 90 V (brownout), the UPJunior uses stored power to continue operating temporarily; the loudspeaker will shut down if the voltage does not rise above the low boundary before the stored power is used.

If the voltage rises above 264 V, the UPJunior power supply can be damaged.

⚠ **CAUTION:** The UPJunior power source should always operate within its required voltage range, at least a few volts from the upper and lower ranges. This will ensure that AC voltage variations from the service entry — or peak voltage drops due to cable runs — will not cause the UPJunior's amplifier to cycle on and off or cause damage to the power supply.

Powering Up the UPJunior

When AC power is applied to the UPJunior, its Intelligent AC™ power supply automatically selects the correct operating voltage, allowing it to be used internationally without manually setting voltage switches. In addition, Intelligent AC also suppresses high-voltage transients up to several kilovolts, filters common mode and differential mode radio frequencies (EMI), and sustains operation temporarily during low-voltage periods.

When powering up the UPJunior, the following startup events take place over several seconds.

1. Audio output is muted.
2. Voltage is detected and the power supply mode is automatically adjusted as necessary.
3. The fan turns on and the power supply ramps up.
4. The green On/Temp LED on the user panel lights up, indicating the loudspeaker is ready to output audio.

⚠ **CAUTION:** If the On/Temp LED does not light up, or the UPJunior does not output audio after ten seconds, remove AC power immediately and verify that the voltage is within the required range. If the problem persists, contact Meyer Sound Technical Support.

UPJUNIOR CURRENT REQUIREMENTS

The current draw for the UPJunior is dynamic and fluctuates as its operating levels change. Since different cables and circuit breakers heat up at varying rates, it is important to understand the following types of current ratings and how they affect circuit breaker and cable specifications.

- **Idle Current** — The maximum rms current during idle periods.
- **Maximum Long-Term Continuous Current** — The maximum rms current during a period of at least 10 seconds. The Maximum Long-Term Continuous Current is used to calculate temperature increases for cables, to ensure that cable sizes and gauges conform to electrical code standards. The current rating is also used as a rating for slow-reacting thermal breakers. In addition, the Maximum Long-Term Continuous Current can be used to calculate the AC looping capability of the UPJunior.
- **Burst Current** — The maximum rms current during a period of around one second. The Burst Current is used as a rating for magnetic breakers. It is also used for calculating the peak voltage drop in long AC cable runs according to the following formula:

  V pk (drop) = I pk x R (cable total)

- **Ultimate Short-Term Peak Current** — An rms rating for fast-reacting magnetic breakers.
- **Inrush Current** — The spike of initial current presented when powering on.

You can use the following table as a guide for selecting cable gauges and circuit breaker ratings for the system's operating voltage.

UPJunior Current Draw

Current Draw	115 V AC	230 V AC	100 V AC
Idle Current	0.448 A rms	0.285 A rms	0.497 A rms
Maximum Long-Term Continuous Current	2.55 A rms	1.55 A rms	2.75 A rms
Burst Current	2.9 A rms	1.7 A rms	3.2 A rms
Ultimate Short-Term Peak Current	12.0 A peak	9.0 A peak	13.0 A peak
Inrush Current	15.0 A peak	13.0 A peak	15.0 A peak

The minimum electrical service amperage required by a UPJunior loudspeaker system is the sum of the Maximum Long-Term Continuous Current for each loudspeaker. An additional 30% above the minimum amperage is recommended to prevent peak voltage drops at the service entry.

NOTE: For best performance, the AC cable voltage drop should not exceed 10 V, or 10% at 115 V and 5% at 230 V. Make sure that even with AC voltage drops that the AC voltage always remains within the operating window.

ELECTRICAL SAFETY ISSUES

Pay close attention to these important electrical and safety issues.

- The UPJunior requires a grounded outlet. Always use a grounded outlet and plug.

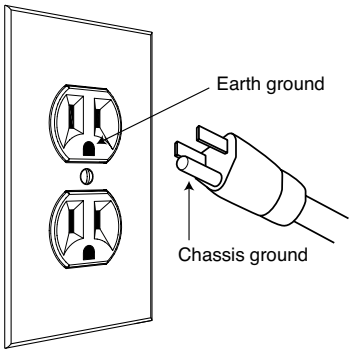

- Do not use a ground-lifting adapter or cut the AC cable ground pin.

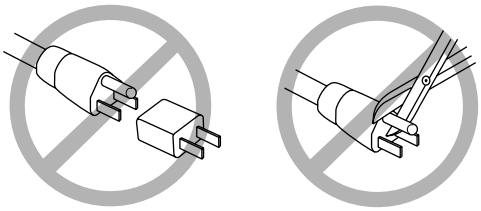

- Keep all liquids away from the UPJunior to avoid hazards from electrical shock.
- Do not operate the unit if the power cables are frayed or broken.
- Do not exceed the current capability of the UPJunior's 20-amp AC Input connector. When looping loudspeakers, consider the total current draw for all loudspeakers on the circuit, including the first loudspeaker.
- Make sure the UPJunior's AC power cable has the appropriate power plug (on the other end) for the area in which you will operate the loudspeaker. In addition, the AC power cable must be rated for the total current draw of all loudspeakers looped from the power source.

CHAPTER 3: AMPLIFICATION AND AUDIO

The low- and high-frequency drivers in the UPJunior are powered by a two-channel proprietary Meyer Sound amplifier with MOSFET output stages. The audio signal is processed with an electronic crossover, correction filters for phase and frequency response, and driver protection circuitry. Each channel has peak and rms limiters that prevent driver over-excursion and regulate the temperature of the voice coil.

The user panel on the back of the UPJunior has two slots for modules. The top slot contains an audio input module (described in this chapter). The bottom slot is reserved for the optional RMS module, used for connecting to the RMS remote monitoring system (see Chapter 7, “The RMS Remote Monitoring System”).

AUDIO INPUT MODULES

The UPJunior can be equipped with either of two audio input modules: The *Looping Audio Input* module or the *Looping, Polarity, and Attenuating Audio Input* module. Both audio input modules have input and looping connectors, and LEDs for monitoring temperature and limiting. In addition, the Looping, Polarity, and Attenuating Audio Input module has a switch for swapping the signal’s polarity, and a knob for attenuating the input signal level to –18 dB.

The Looping Audio Input Module

The Looping Audio Input module includes the following connectors and LEDs.

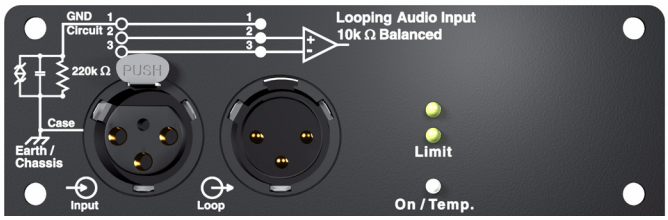

Looping Audio Input Module

Input Connector

The female XLR Input connector accepts a balanced audio signal with an input impedance of 10 kOhm. The connector uses the following wiring:

- **Pin 1** — 220 kOhm to chassis and earth ground (ESD clamped)
- **Pin 2** — Signal (+)
- **Pin 3** — Signal (–)
- **Case** — Earth (AC) ground and chassis

Pins 2 and 3 carry the input as a differential signal. Pin 1 is connected to earth through a 220 kOhm, 1000 pF, 15 V clamped network. This circuitry provides virtual ground lift for audio frequencies while allowing unwanted signals to bleed to ground. Make sure to use standard, balanced XLR audio cables with all three pins connected on both ends. Telescopic grounding is not recommended, and shorting an input connector pin to the case may cause a ground loop, resulting in hum.

TIP: If unwanted noise or hiss is produced by the loudspeaker, disconnect its input cable. If the noise stops, there is most likely nothing wrong with the loudspeaker. To locate the source of the noise, check the audio cable, source audio, and AC power.

Loop Connector

The male XLR Loop connector allows multiple UPJuniors to be looped from a single audio source. Connect the Loop output of the first UPJunior to the Input of the second UPJunior, and so forth. The Loop connector is wired in parallel to the Input connector and transmits the unbuffered source signal even when the UPJunior is powered off.

To avoid distortion when looping multiple UPJunior loudspeakers, make sure the source device can drive the total load impedance of the looped loudspeakers. The source device must be capable of delivering a minimum of 20 dBV (10 V rms into 600 ohms) to yield the maximum peak SPL over the operating bandwidth of the loudspeaker.

To calculate the load impedance for the looped loudspeakers, divide 10 kOhms (the input impedance for a single UPJunior) by the number of looped loudspeakers. For example, the load impedance for 10 UPJuniors is 1000 Ohms (10 kOhms / 10). To drive this number of looped loudspeakers, the source device should have an output impedance of 100 ohms or less. This same rule applies when looping UPJuniors with other self-powered Meyer Sound loudspeakers and subwoofers.

NOTE: Most source devices are capable of driving loads no smaller than 10 times their output impedance.

NOTE: Make sure that all cabling for looped loudspeakers is wired correctly (Pin 1 to Pin 1, Pin 2 to Pin 2, and so forth) to prevent the polarity from being reversed. If one or more loudspeakers in a system have reversed polarity, frequency response and coverage can be significantly degraded.

Limit LEDs

The UPJunior's low- and high-frequency drivers are powered by separate amplifier channels, each with their own limiter. Limiting activity is indicated with the two yellow Limit LEDs. The top LED indicates limiting for the high-frequency channel and the bottom LED indicates limiting for the low-frequency channel. When engaged, a channel's limiter not only protects the driver, but also prevents signal peaks from causing excessive distortion in the amplifier's channel, thereby preserving headroom and maintaining smooth frequency responses at high levels. When a channel's level returns to normal, below the limiter's threshold, limiting ceases.

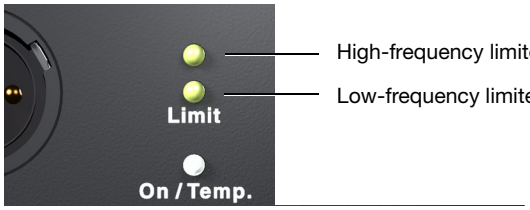

Limit LEDs

The UPJunior performs within its acoustical specifications at normal temperatures when the Limit LEDs are unlit, or if the LEDs are lit for two seconds or less and then turn off for at least one second. If an LED remains lit for longer than three seconds, that channel enters hard limiting where:

- Increases to the input level have no effect.
- Distortion increases due to clipping and nonlinear driver operation.
- The driver is subjected to excessive heat and excursion, which will compromise its life span and may eventually lead to damage over time.

CAUTION: The Limit LEDs indicate when a safe, optimum level is exceeded. If a UPJunior begins to limit before reaching the required SPL, consider adding more loudspeakers to the system.

NOTE: The UPJunior uses optical limiters that add no noise and have no effect on the signal when the limiters are not engaged and the Limit LEDs are not lit.

On/Temp LED

When the UPJunior is initially powered on, its On/Temp LED is green. The LED turns red when the temperature of the UPJunior's heatsink reaches 75° C (167° F), at which point its fan switches to high speed. While the UPJunior will continue to operate normally when the On/Temp LED is red, this is an indication that the unit is reaching its maximum dissipation and a reduction in SPL is recommended.

TIP: When the UPJunior is connected to an RMS network, the RMS software provides additional feedback on the loudspeaker's operating temperature. For more information, see Chapter 7, "The RMS Remote Monitoring System."

Amplifier Cooling System

The UPJunior amplifier employs a combination of natural convection and forced air in its cooling system. The amplifier's heatsink allows natural convection cooling from the air flowing near its fins. A low-noise fan forces air to the fins, ensuring low temperatures for the amplifier even when the loudspeaker is used under high ambient temperatures, tightly packed conditions, and at high continuous levels.

CAUTION: The UPJunior's heatsink can reach temperatures of up to 75° C (167° F) during normal operation. Use extreme caution when approaching the rear of the loudspeaker.

CAUTION: To keep the UPJunior from getting too hot, allow for proper ventilation around the loudspeaker, especially when it is operated in tightly packed conditions.

The Looping, Polarity, and Attenuating Audio Input Module (Optional)

The Looping, Polarity, and Attenuating Audio Input module has the same input and output connectors and LEDs found on the Looping Audio Input module (see “The Looping Audio Input Module” on page 13). In addition, it also has a Polarity switch and Attenuator knob.

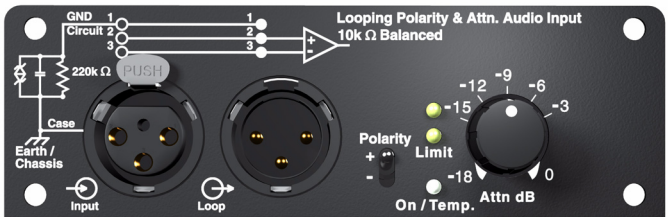

Looping, Polarity, and Attenuating Audio Input Module

Polarity Switch

The Polarity switch lets you change the polarity of the source signal. When the switch is in the up (+) position, pin 2 is hot relative to pin 3, resulting in a positive pressure wave when a positive signal is applied to pin 2. When the switch is in the down (–) position, pin 3 is hot relative to pin 2, resulting in a positive pressure wave when a positive signal is applied to pin 3.

Attenuator Knob

The Attenuator knob reduces the source signal level connected to the Input connector. The knob offers an attenuation range of 0 dB (no attenuation), when turned all the way to the right, to –18 db, when turned all the way to the left.

The Attenuate knob does not affect the signal coming from the Loop connector. The Loop connector is wired in parallel to the Input connector and transmits the unbuffered source signal (even when the UPJunior is powered off).

CHAPTER 4: ADDING SUBWOOFERS TO A UPJUNIOR SYSTEM

A UPJunior loudspeaker system can be deployed with Meyer Sound self-powered subwoofers (see Table 1). Subwoofers achieve very low frequency responses and extend the system response appreciably, increasing the overall acoustic power of the system in the lowest frequencies.

The ideal ratio of UPJuniors to subwoofers depends on the following variables:

- Subwoofer model
- System configuration
- Frequency content of source material
- Headroom required for low frequencies

For most applications, the ratios in Table 1 should yield good results.

Table 1: Recommended Meyer Sound Subwoofers

Sub-woofer	Frequency Response	Recommended Ratio (Number of UPJuniors per Subwoofer)
650-P	28–100 Hz ±4 dB	2 x 1 for bass-heavy applications; 4 x 1 for flat frequency response (6 db of attenuation for subwoofer)
600-HP	39–130 Hz ±4 dB	2 x 1 for bass-heavy applications; 4 x 1 for flat frequency response (6 db of attenuation for subwoofer)
700-HP	30–125 Hz ±4 dB	4 x 1 for bass-heavy applications
USW-1P	35–180 Hz ±4 dB	1 x 1 for bass-heavy applications; 2 x 1 for flat frequency response
UMS-1P	29–135 Hz ±4 dB	1 x 1 for flat frequency response; Not recommended for bass-heavy applications

Full-range signals can be connected directly to Meyer Sound self-powered loudspeakers because the loudspeakers have built-in active crossovers. Subwoofers can be added to a UPJunior loudspeaker system by simply daisy-chaining them to the UPJuniors. In more complex systems, subwoofers can be added by using line drivers or digital signal processor to send multiple outputs to each sub-system. In addition, you can use low-cut filters to flatten the overall frequency response of the system while increasing the UPJunior headroom in the lower frequencies.

NOTE: If the subwoofer's Limit LEDs begin to light before reaching the required SPL, consider adding more subwoofers to meet the SPL requirements without exposing the drivers to excessive heat and excursion.

TIP: MAPP Online Pro™ can be used to accurately predict the appropriate loudspeaker deployment and subwoofer integration for a loudspeaker systems, complete with coverage data, system delay and equalization settings, rigging information, and detailed design illustrations. For more information, see "MAPP Online Pro" on page 33.

ADDING SUBWOOFERS BY DAISY-CHAINING

When UPJunior loudspeakers and subwoofers are daisy-chained using the Loop connector, the result is a fairly flat frequency response. However, the response will show a rise in the 60–200 Hz range where the loudspeakers' response overlaps at certain ratios (see Table 1).

To add a subwoofer by daisy-chaining:

1. Daisy-chain the suggested number of UPJuniors for your subwoofer (see Table 1). Connect the source signal to the Input of the first UPJunior, then connect the Loop output of the first UPJunior to the Input of the second UPJunior (and so forth).
2. Connect the Loop output of the last UPJunior in the chain to the subwoofer Input.
3. Configure the polarities for the loudspeakers:

- If the UPJuniors and subwoofer are coplanar, or they are very close together (four feet or less), set their polarities to the same value. If any of the loudspeakers have a Polarity switch, set each switch to the up (+) position.
- If the UPJuniors and subwoofer are more than four feet apart, or if a delay is required between them, use a measurement system like Meyer Sound's SIM® 3 to determine appropriate delay and polarity settings.

CAUTION: Make sure the source signal is sufficient to drive the total load impedance of the daisy-chained loudspeakers (see "Loop Connector" on page 13).

ADDING SUBWOOFERS WITH A LINE DRIVER

Using a line driver with dedicated low and mid-hi outputs (like Meyer Sound's LD-1A and LD-2) to drive a UPJunior loudspeaker system with subwoofers allows adjustments to the gain and polarity of each sub-system. This lets you effectively compensate for the ratio of loudspeakers to subwoofers, as well as any acoustical conditions. You can also engage a low-cut filter on the signal routed to the UPJuniors to flatten the overall frequency response, minimizing the gain in the frequency range where the UPJuniors and subwoofers overlap while increasing the UPJunior headroom in the lower frequencies.

NOTE: When using a line driver, if the gains for the UPJuniors and subwoofer are set to the same level, the combined response is identical to a daisy-chained configuration, resulting in a gain in the overlapping frequency range.

To add a subwoofer with a line driver:

1. Daisy-chain the suggested number of UPJuniors for your subwoofer (see Table 1). Connect the output of the line driver to the Input of the first UPJunior, then connect the Loop output of the first UPJunior to the Input of the second UPJunior (and so forth).
2. Connect the low or subwoofer output of the line driver to the subwoofer Input.
3. To minimized the gain in the frequency range where the UPJuniors and subwoofer overlap, engage a low-cut filter for the signal routed to the UPJuniors.
4. Configure the polarities for the loudspeakers:

- If a low-cut filter is engaged for the UPJuniors, and the UPJuniors and subwoofer are coplanar or very close together (four feet or less), a reverse in the polarity for the subwoofer may be required.
- If the low-cut filter is engaged for the UPJuniors, and the UPJuniors and subwoofer are more than four feet apart, the polarities may need to be reversed again to compensate for delay propagation. In these cases, a measurement system like Meyer Sound's SIM 3 is recommended to determine appropriate delay and polarity settings.

GALILEO LOUDSPEAKER MANAGEMENT SYSTEM

Meyer Sound's Galileo® loudspeaker management system is a comprehensive solution for driving and aligning loudspeaker systems, especially those comprised of Meyer Sound self-powered loudspeakers. The Galileo 616 is a two-space rack unit with six inputs and 16 low-latency outputs. Processing for the outputs includes gain, polarity, delay, high- and low-pass filters, equalization (parametric and TruShaping), and atmospheric correction.

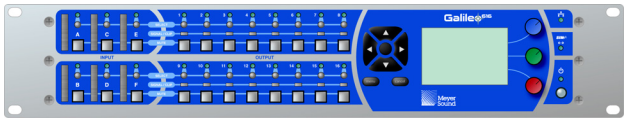

Galileo 616

The Galileo 616 can be controlled from its intuitive front panel or from the extensive Compass™ software running on a Windows or Mac® computer. The Galileo system also interfaces seamlessly with Meyer Sound's SIM 3 audio analyzer.

USING DIGITAL SIGNAL PROCESSORS

Full-range signals can be connected directly to Meyer Sound self-powered loudspeakers because the loudspeakers have built-in active crossovers. External crossovers and digital signal processors are optional and should be used with caution as they can introduce phase shifts that cause destructive cancellations.

If a digital signal processor is used, both the UPJuniors and subwoofer should be driven from the same processor to keep their delay times the same. Otherwise a phase shift between the UPJuniors and subwoofer may be encountered. In addition, you should verify the delay time between channels: some digital signal processors may incur channel-to-channel delays when the processor is near maximum throughput, which becomes more likely as the number of filters in use by the processor is increased.

In no case should a filter higher than the 2nd order be used on source signals. The additional phase shift introduced by these filters deteriorates the impulse response, and the higher roll-off does not improve crossover interaction.

In addition, when using third-party digital signal processors to filter source signals, it is highly recommended that the filter be configured to emulate the low-cut filter used by Meyer Sound's LD-1A and LD-2.

LD-1A and LD-2 Low-Cut Filter Parameters

Type	Order	Pole Frequency	Q
High Pass	2nd (–12dB/oct)	162 Hz	0.82*

**If the digital signal processor does not have variable Q for high-pass filters, the filter should be set to "Butterworth" (Q ≅ .7).*

If loudspeakers will be driven directly from a digital signal processor, make sure the signal is sufficient to drive the total load impedance of the connected loudspeakers (see "Loop Connector" on page 13).

TIP: To address the collective concerns of array design, subwoofer integration, digital signal processors, delay systems, and acoustical conditions, a measurement system like Meyer Sound's SIM 3 is strongly recommended.

CHAPTER 5: THE VARIO HORN

ROTATING THE VARIO HORN

The UPJunior has a VariO horn that can be easily rotated to deliver either wide or narrow coverage, whether the loudspeaker is oriented vertically or horizontally. The VariO horn is factory installed with a wide coverage of 80º horizontal x 50º vertical (when the loudspeaker is oriented vertically). The horn can be rotated to provide a narrow, targeted coverage of 50º horizontal x 80º vertical (when the loudspeaker is oriented vertically).

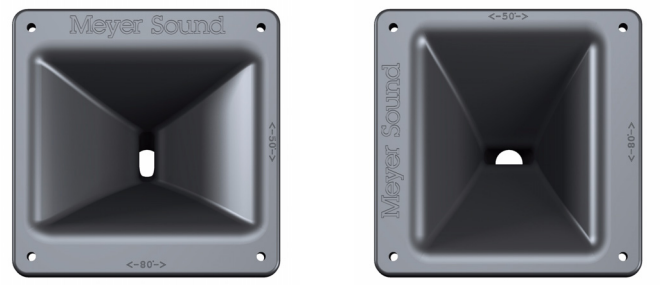

VariO Horn at 80°H x 50°V (Left) and 50°H x 80°V (Right)

To rotate the UPJunior's VariO horn from wide coverage to narrow coverage:

1. Remove the four 10-32 x 5/8" screws from the grille cover (two from the top and two from the bottom).
2. Carefully remove the grille cover.
3. Remove the four 10-32 x 1" flange screws from the horn.
4. Carefully remove the horn from the cabinet, making sure not to place any stress on its wiring.

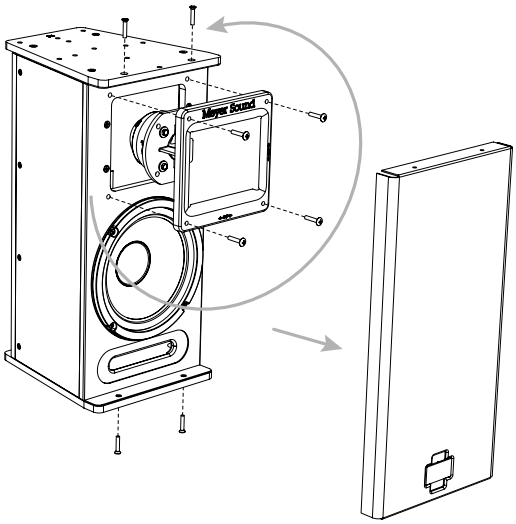

5. Rotate the horn 90º clockwise, so its orientation is 80º x 50º, with the horn's wide flange situated near the sides of the cabinet instead of the top and bottom.
6. Place the horn back in the cabinet (it should fit comfortably snug) and secure it with the four 10-32 x 1" flange screws.

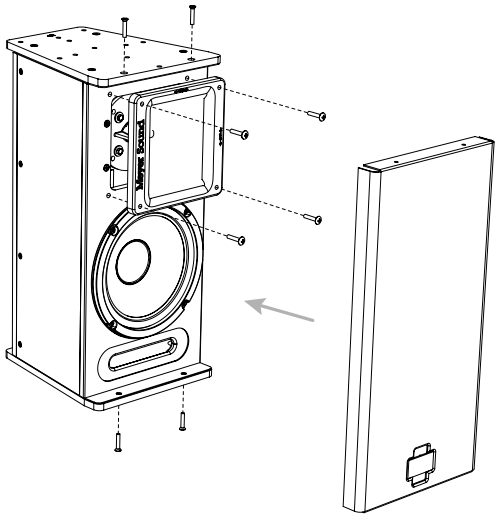

7. Reattach the grille cover and secure it with the four 10-32 x 5/8" screws.

TIP: To rotate the Meyer Sound logo on the UPJunior grille frame, pull up on the logo, rotate it to the desired position, and release.

CHAPTER 6: QUICKFLY RIGGING

The UPJunior is compatible with Meyer Sound's QuickFly system, a comprehensive collection of custom-designed rigging, flying, and mounting options. Comprised of rugged, reliable, and easy-to-configure components, QuickFly lets you deploy UPJuniors as either individual loudspeakers or as arrays at precise angles to take full advantage of their directional components. The UPJunior's top and bottom plates are constructed of heavy-duty, high-strength, corrosion-resistant 6061-T6 aluminum and include threaded metric holes (for M8 screws) for easy connection to QuickFly rigging and third-party mounting options.

Important Safety Considerations!

When installing Meyer Sound loudspeakers, the following precautions should always be observed:

- All Meyer Sound products must be used in accordance with local, state, federal, and industry regulations. It is the owner's and user's responsibility to evaluate the reliability of any rigging method for their application. Rigging should only be carried out by experienced professionals.
- Use mounting and rigging hardware that has been rated to meet or exceed the weight being hung.
- Make sure to attach mounting hardware to the building's structural components (studs or joists), and not just to the wall surface. Verify that the building's structure and the anchors used for the installation will safely support the total weight of the mounted loudspeakers.
- Use mounting hardware appropriate for the surface where the loudspeaker will be installed.
- Make sure bolts and eyebolts are tightened securely. Meyer Sound recommends using Loctite® on eyebolt threads and safety cables.
- Inspect mounting and rigging hardware regularly. Immediately replace any worn or damaged components.

BASIC EYEBOLT RIGGING

The UPJunior ships with two M8 threaded, 20 mm eyebolts. The eyebolts attach to the top or bottom plates of the UPJunior and can be used to suspend the loudspeaker.

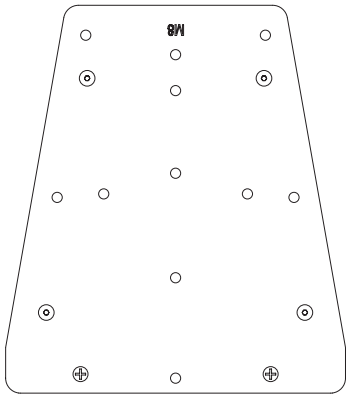

UPJunior Top Plate with Threaded Holes for Eyebolts

A single UPJunior can be suspended with one eyebolt. However, two eyebolts provide more safety and stability, as well the capability of aiming and tilting the UPJunior for targeted coverage.

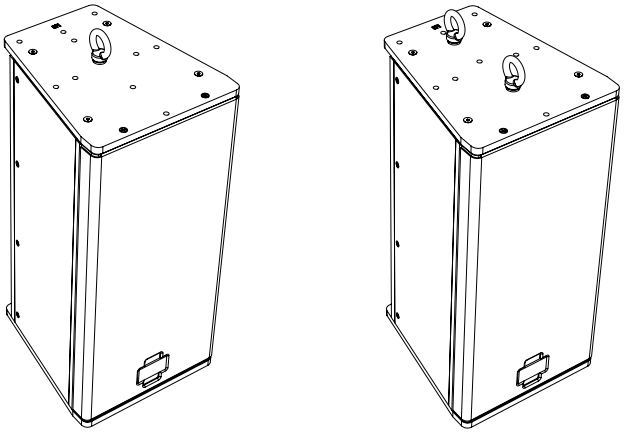

UPJunior with One Eyebolt (Left) and Two Eyebolts (Right)

NOTE: Up to two UPJuniors, oriented vertically, can be suspended with the eyebolts supplied by Meyer Sound at a 7:1 safety factor. For this configuration, the top UPJunior would have two eyebolts installed on its top plate and two eyebolts installed on its bottom plate, for connecting to the second UPJunior. Additional M8 eyebolts are available from Meyer Sound.

POLE-MOUNTING THE UPJUNIOR

You can mount a single UPJunior on a pole with a third-party pole-mount adapter (such as the BMB-200K mounting bracket from Ultimate Support).

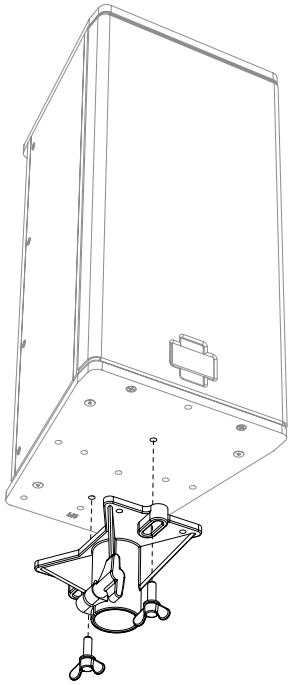

UPJunior with Pole-Mount Adapter (Shown Upside Down)

THE MUB-UPJUNIOR U-BRACKET

You can use the MUB-UPJunior U-bracket to mount a single UPJunior on walls, ceilings, and stage lips, to mount up to two UPJuniors on a tripod, or to mount an array of UPJuniors. The U-bracket's adjustment slot lets you adjust how close the UPJunior is located to the mounting surface and at what angle the loudspeaker will be positioned. The MUB-UPJunior U-bracket kit includes two M8, 16 mm bolts.

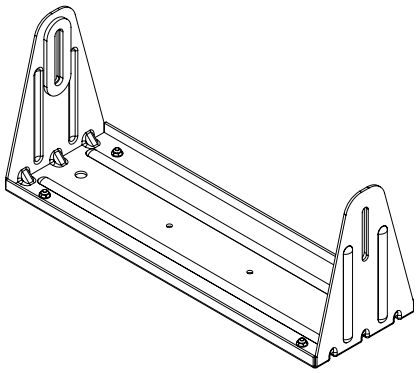

MUB-UPJunior U-Bracket

NOTE: When mounting a single UPJunior with the MUB-UPJunior U-bracket, the bracket should be fastened to the center holes on the loudspeaker's top and bottom plates. When flying an array of UPJuniors from the MUB-UPJunior U-bracket, the bracket should be fastened to the holes toward the rear of the loudspeaker plates to compensate for the shift in center of gravity.

MUB-UPJunior U-Bracket Load Ratings for Flown UPJuniors

An array of up to three UPJuniors can be flown with the MUB-UPJunior U-bracket at a 7:1 safety factor. When flying any number of UPJuniors with the MUB-UPJunior U-bracket, the U-bracket must be secured to the mounting surface with either the two 1/2" center holes or the four 1/4" corner holes.

MUB-UPJunior U-Bracket Load Ratings

Holes	Safety Factor	Number of Flown UPJuniors
Two 1/2" Center Holes	7:1	Up to 3 (with the load evenly distributed on the two points)
Four 1/4" Corner Holes	7:1	Up to 3 (with the load evenly distributed on the four points)
Two 1/4" Center Holes	–	Not supported

⚠ **CAUTION:** The 1/4” center holes are not rated for flown loudspeakers. These holes should only be used for pole-mounting with an adapter.

Wall-Mounting with the MUB-UPJunior

The MUB-UPJunior U-bracket lets you mount the UPJunior either vertically or horizontally on a wall.

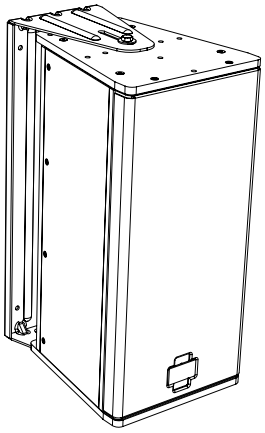

MUB-UPJunior, Vertical Wall Mount

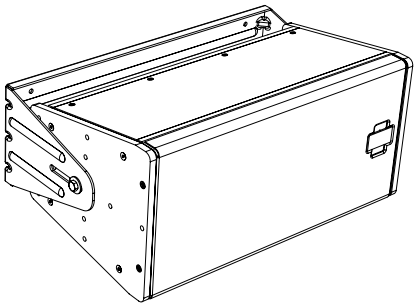

MUB-UPJunior, Horizontal Wall Mount

Ceiling-Mounting with the MUB-UPJunior

The UPJunior can be mounted on a ceiling, underbalcony, or canopy area with the MUB-UPJunior U-bracket.

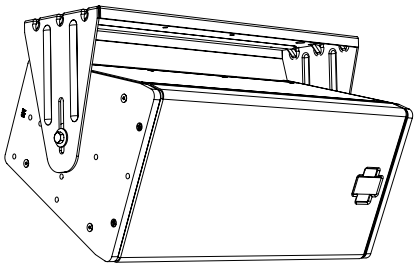

MUB-UPJunior, Ceiling-Mounted

Truss-Mounting with the MUB-UPJunior

An array of UPJuniors (with the MAAM-UPJunior array adapter) can be mounted on a truss with the MUB-UPJunior U-bracket. The top loudspeaker in the array is attached to the MUB-UPJunior U-bracket and the U-bracket is attached to the truss with two “C” or “G” hanging clamps (not included).

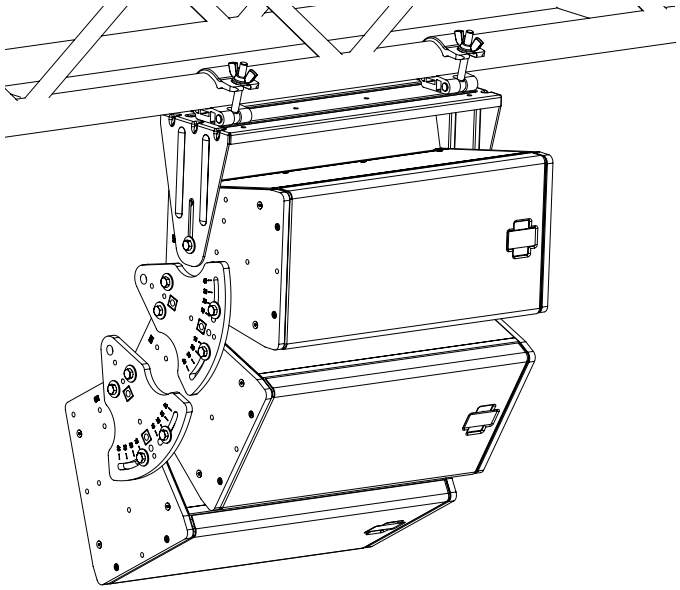

MUB-UPJunior with MAAMP-UPJuniors, Truss-Mounted

NOTE: When flying an array of UPJuniors from the MUB-UPJunior U-bracket, the bracket should be fastened to the holes near the rear of the loudspeaker plates, to compensate for the shift in center of gravity. In addition, shackles can be attached to the array adapter plate’s rear pickup holes for additional support or to provide control over the vertical tilt.

Floor-Mounting with the MUB-UPJunior

The UPJunior can be mounted on a floor or stage lip (for front-fill applications) with the MUB-UPJunior U-bracket.

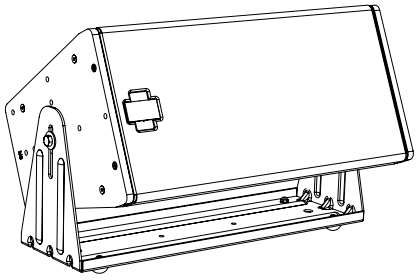

MUB-UPJunior, Floor-Mounted

Pole-Mounting with the MUB-UPJunior

You can use the MUB-UPJunior U-bracket to pole-mount a single UPJunior with a third-party pole adapter. This combination allows the UPJunior's angle to be adjusted. The U-bracket can also be used to pole-mount a vertical array of up to two UPJuniors with an MAAM-UPJunior array adapter.

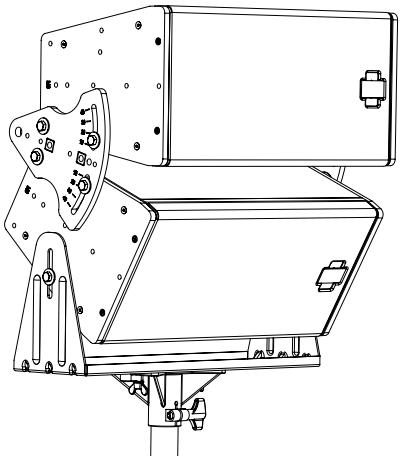

MUB-UPJunior with MAAM-UPJunior Array, Pole-Mounted

The MUB-UPJunior U-bracket should be secured to the pole adapter with the bracket's two 1/4" center holes.

⚠ **CAUTION:** When pole-mounting UPJuniors (up to two) with the MUB-UPJunior U-bracket, make sure the third-party pole and pole adapter have been rated to support the total weight of the loudspeakers. Observe all safety precautions specified by the manufacturers.

THE MYA-UPJUNIOR MOUNTING YOKE

The MYA-UPJunior mounting yoke suspends a single UPJunior loudspeaker and allows a wide range of horizontal and vertical adjustment. The mounting yoke's bottom bar attaches to the bottom plate of the UPJunior with two M8 mounting screws (included). A "C" or "G" hanging clamp and steel safety cable (not included) are required to suspend the MYA-UPJunior mounting yoke.

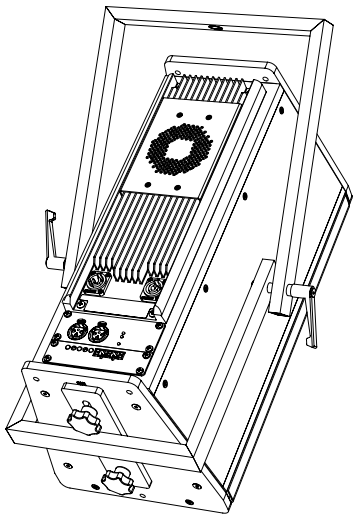

MYA-UPJunior Mounting Yoke

NOTE: The top bar of MYA-UPJunior mounting yoke accommodates hanging clamps with standard 1/2-inch or 12 mm bolts.

THE MAAM-UPJUNIOR ARRAY ADAPTER

The MAAM-UPJunior array adapter provides a solid connection between UPJunior loudspeakers to form horizontal and vertical arrays of up to three loudspeakers. The front adjustment slot is used to adjust the distance between the loudspeakers to achieve the desired splay angle (from 20° to 80°) and coverage. The MAAM-UPJunior array adapter kit includes two plates, eight M8 screws and washers, and four M8 knobs (for floor monitor use only). A single kit can create an array of two UPJunior loudspeakers; two kits are required for an array of three loudspeakers.

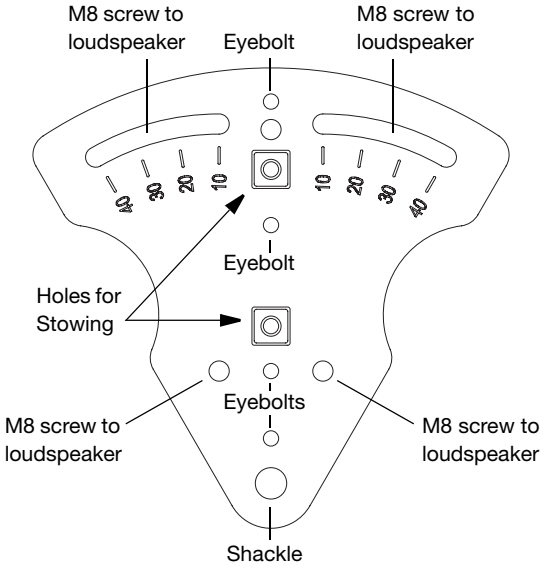

MAAM-UPJunior Array Adapter Plate

Arrays are assembled by attaching the array adapter plates to the top and bottom plates of the UPJuniors and securing them with the included M8 screws and washers.

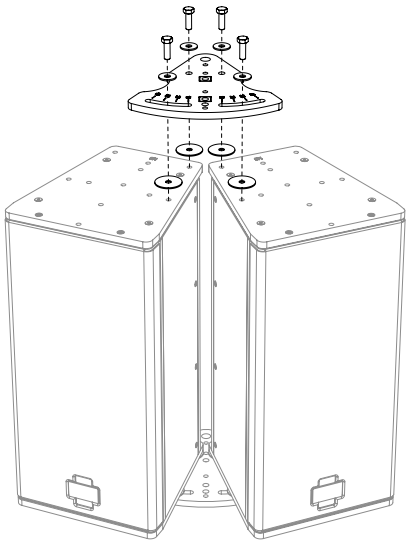

Attaching an Array Adapter Plate

The MAAM-UPJunior array adapter can also be used to position a UPJunior as a floor monitor with adjustable angles. When positioning the UPJunior as a floor monitor, the array adapter plates attach to the UPJunior with the included M8 knobs.

⚠ **CAUTION:** The MAAM-UPJunior array adapters support a maximum of three UPJuniors in an array.

⚠ **CAUTION:** The M8 knobs included with the MAAM-UPjunior array adapter should only be used to secure the plates to the UPJunior when positioning it as a floor monitor. The M8 knobs should not be used for flown applications.

Horizontal Arrays with the MAAM-UPJunior

Horizontal arrays with the MAAM-UPJunior array adapter can be flown by attaching eyebolts to the UPJunior plates or directly to the array adapter plates. Shackles can also be attached to the adapter plate's rear pickup holes for additional support or to provide control over the array's vertical tilt.

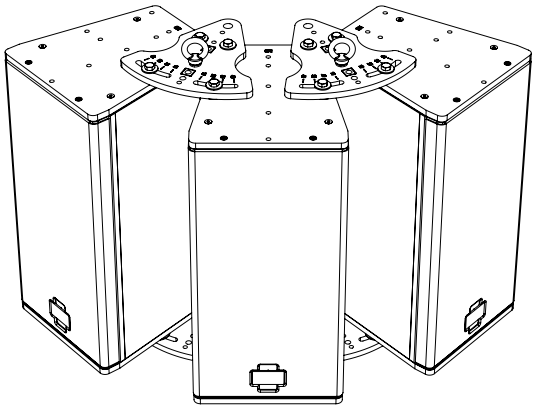

MAAM-UPJunior, Horizontal Array

TIP: To create optimum coverage in a horizontal array, the splay between UPJunior loudspeakers should be 50° when the VariO horns are in the 80°H x 50°V position (this yields a horizontal coverage of 130°). Angles of less than 50° between the loudspeakers can lead to too much interaction between the loudspeakers, while angles of greater than 50° may result in holes in the coverage.

Vertical Arrays with the MAAM-UPJunior

Vertical arrays with the MAAM-UPJunior array adapter can be flown by attaching eyebolts to the UPJunior plates or directly to the array adapter plates. Shackles can also be attached to the adapter plate's rear pickup holes for additional support or to provide control over the vertical tilt.

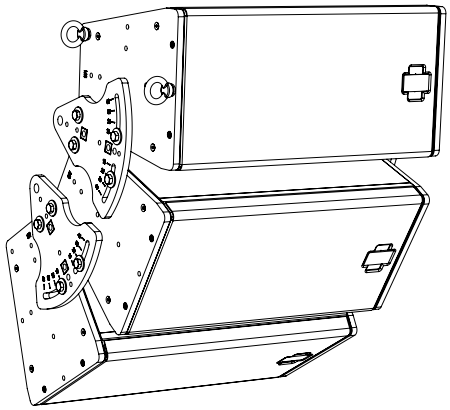

MAAM-UPJunior, Vertical Array with Eyebolts

Vertical arrays of up to three UPJuniors with the MAAM-UPJunior array adapter can be ceiling mounted by attaching an MUB-UPJunior U-bracket to the top UPJunior.

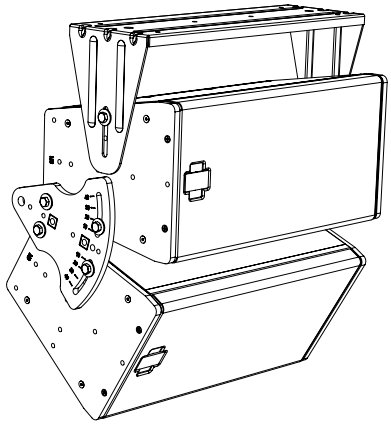

MAAM-UPJunior, Vertical Array Ceiling-Mounted

NOTE: When flying an array of UPJuniors from the MUB-UPJunior U-bracket, the bracket should be fastened to the holes toward the rear of the loudspeaker plates, to compensate for the shift in center of gravity. In addition, shackles can be attached to the array adapter plate's rear pickup holes for additional support or to provide control over the vertical tilt.

TIP: To create optimum coverage in a vertical array, the splay between UPJunior loudspeakers should be 30° when the VariO horns are in the 80°H x 50°V position (this yields a vertical coverage of 80°). Angles of less than 30° between the loudspeakers can lead to too much interaction between the loudspeakers, while angles of greater than 30° may result in holes in the coverage.

Floor Monitoring with the MAAM-UPJunior

The MAAM-UPJunior array adapter can be used for positioning the UPJunior as a floor monitor, with the front adjustment slot being used to adjust the angle of the loudspeaker. The following illustrations show the stowed position for when the UPJunior is not in use (Figure 2), as well as some of the more common angle configurations.

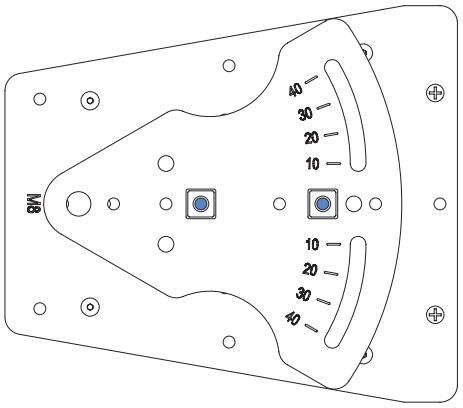

Figure 2: MAAM-UPJunior with UPJunior Stowed

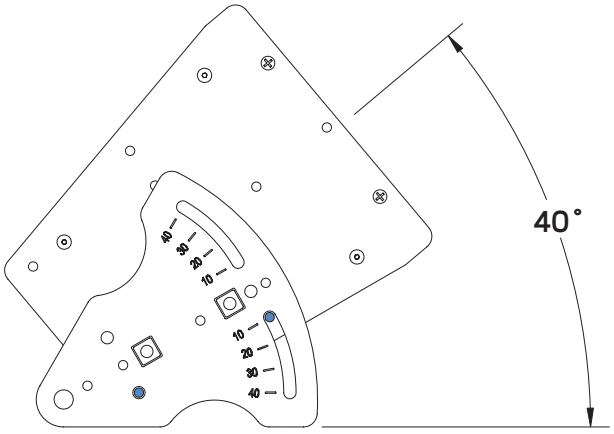

MAAM-UPJunior with UPJunior at 40 Degrees

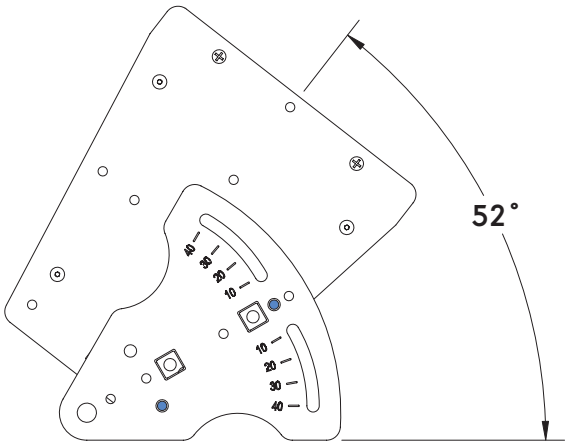

MAAM-UPJunior with UPJunior at 52 Degrees

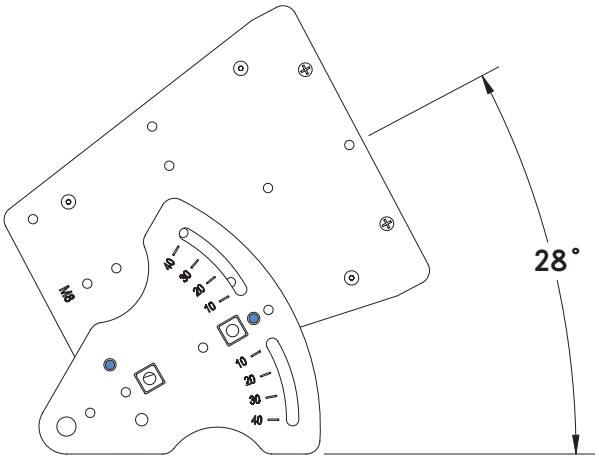

MAAM-UPJunior with UPJunior at 28 Degrees

CHAPTER 7: THE RMS REMOTE MONITORING SYSTEM

An optional RMS module can be installed in the UPJunior, allowing it to be connected to an RMS (remote monitoring system) network. RMS allows real-time monitoring of multiple Meyer Sound self-powered loudspeakers from a Windows-based computer. The RMS host computer communicates with Meyer Sound loudspeakers (equipped with RMS modules) via a simple twisted pair network, or via an Ethernet network using an FT-10 to Ethernet adapter.

THE RMS SOFTWARE

The optional RMS software provides extensive system status and performance data for each loudspeaker, including amplifier voltage, limiting activity, power output, fan and driver status, as well as mute and solo capability. Loudspeakers are added to the RMS network and assigned a node name during a one-time commissioning procedure where the loudspeaker is identified by either entering its unique Neuron ID, or by pressing its Service button.

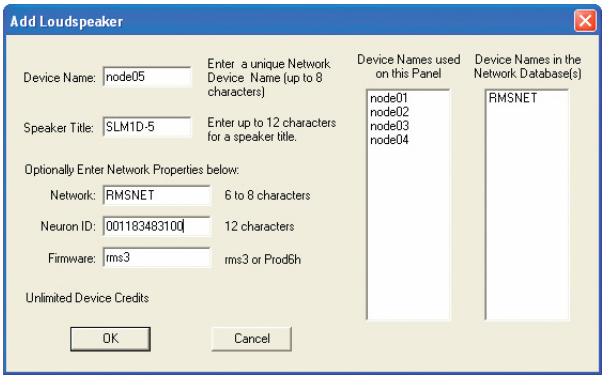

RMS Add Loudspeaker Dialog Box

Once loudspeakers are identified on the RMS network, they appear in the RMS software as icons and views; they are also automatically added to the RMS database on the host computer. The RMS state for each loudspeaker is retained on its RMS module.

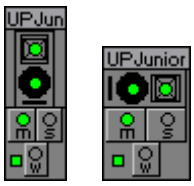

UPJunior RMS Icons

The RMS software displays all loudspeakers on the network in a panel with icons, Meter views, and Text views that can be customized to suit your needs. Loudspeaker data is updated 2–5 times per second. Individual loudspeakers can be physically identified with the Wink option in RMS, which lights the Wink LED on the RMS module for that particular loudspeaker. Conversely, a loudspeaker can be identified in the RMS software by pressing the Service button on the loudspeaker's RMS module.

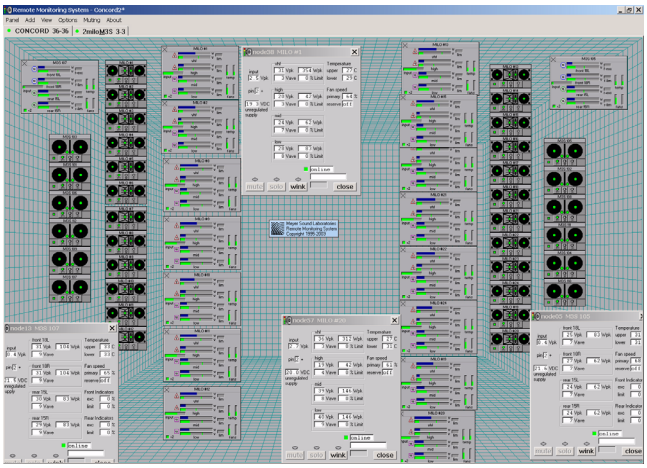

RMS User Panel

Loudspeaker icons and views can be arranged to represent how the loudspeakers have been deployed in the system. Multiple panels can be saved and recalled for specific performances and venues.

NOTE: When the UPJunior's heatsink reaches 75° C (167° F), its On/Temp LED turns red, while its loudspeaker icon in the RMS software turns yellow — indicating the UPJunior is running hot, but still within safe operating limits. However, if the RMS icon turns red, the UPJunior is operating above its 100° C (212° F) maximum safe operating temperature. Make sure that the UPJunior is properly ventilated or decrease the loudspeaker's audio output signal immediately.

THE RMS MODULE

The RMS module is installed in the bottom slot of the user panel on the back of the Meyer Sound loudspeaker. The RMS user panel has three LEDs, two buttons, and two Network connectors.

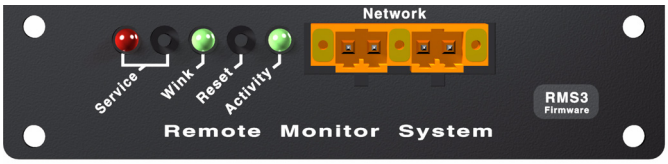

RMS Module

NOTE: The LEDs and buttons on the RMS user panel are used exclusively by RMS and have no effect on the acoustical or electrical activity of the UPJunior, unless Mute and Solo are enabled for the loudspeaker.

Service LED (Red)

The red Service LED provides the following feedback:

- When unlit, the loudspeaker is successfully connected to the network and commissioned.
- When blinking once every two seconds, the loudspeaker is connected to the network but not yet commissioned in the RMS software.
- When lit continuously, the loudspeaker's RMS hardware has failed and may indicate that the module has been damaged (contact Meyer Sound Technical Support).

Service Button

Pressing the Service button identifies the loudspeaker on the RMS network and notifies the RMS software that the loudspeaker is connected. When the Service and Reset buttons are pressed at the same time, the card is decommissioned from the network and the red Service LED blinks.

Wink LED (Green)

The green Wink LED lights up when a signal is sent from the RMS software by clicking the Wink button on the loudspeaker's icon or on its Text view. This is useful for identifying the physical loudspeaker corresponding to a loudspeaker icon in the RMS software.

Reset Button

Pressing the Reset button causes the RMS module's firmware to reboot; this will not affect whether the loudspeaker is commissioned (which is stored in flash memory). When the Reset and Service buttons are pressed at the same time, the card is decommissioned from the network and the red Service LED blinks.

Activity LED (Green)

The green Activity LED flashes continuously when the loudspeaker has been successfully commissioned.

Network Connectors

The two bi-directional Weidmuller locking connectors transfer data to and from the RMS network. Two connectors are provided to allow for easy connection of multiple (daisy-chained) loudspeakers on the network.

INSTALLING MUTE AND SOLO CAPABILITY

The RMS software allows you to remotely mute and solo individual loudspeakers on the RMS network, which is useful during setup and installation and for troubleshooting. To use the mute and solo capability of any RMS-equipped loudspeaker, a special jumper must be installed in the loudspeaker's RMS module (the jumper ships as a separate item with the loudspeaker). The RMS software must also be configured to enable mute and solo capability. RMS does not provide control over loudspeaker volumes or AC power.

CHAPTER 8: SYSTEM DESIGN AND INTEGRATION TOOLS

Meyer Sound offers two comprehensive tools to assist with the acoustical and functional requirements of system design and optimization. This chapter introduces you to MAPP Online Pro, Meyer Sound's patented online acoustical prediction tool, and SIM 3, a comprehensive system for measurement and analysis.

MAPP ONLINE PRO

MAPP Online Pro is a powerful, cross-platform, Java-based application for accurately predicting the coverage pattern, frequency response, impulse response, and maximum SPL output of single or arrayed Meyer Sound loudspeakers.

Residing on your local computer, the MAPP Online Pro client lets you configure Meyer Sound loudspeaker systems and define the environment in which they will operate, including air temperature, pressure, humidity, and even the location and composition of walls. CAD (DXF) files containing detailed venue information can also be imported.

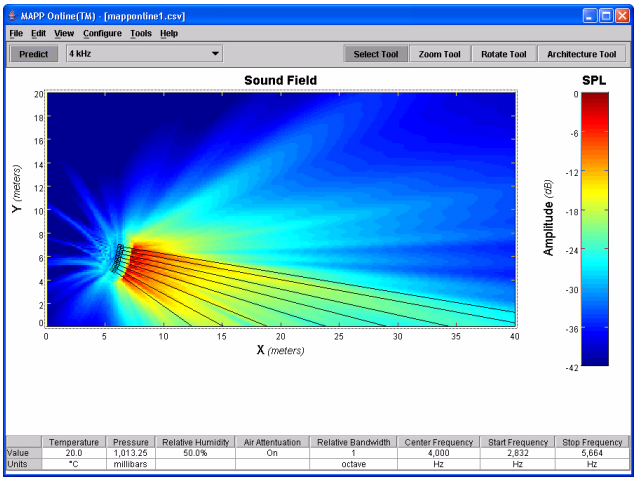

MAPP Online Pro

Whether planning for fixed installations or tours with multiple venues, sound system designers can use MAPP Online Pro to accurately predict the appropriate loudspeaker deployment for each job, complete with coverage data, system delay and equalization settings, rigging information, and detailed design illustrations. MAPP Online Pro's accurate, high-resolution predictions ensure that systems will perform as expected, thereby eliminating unexpected coverage problems and minimizing on-site adjustments.

The key to the accuracy of MAPP Online Pro's predictions is its exhaustive database of Meyer Sound loudspeaker measurements. Performance predictions for each loudspeaker are based on 360 1/48th-octave-band measurements taken with a SIM audio analyzer in the Meyer Sound anechoic chamber. The extraordinary consistency between Meyer Sound loudspeakers guarantees that predictions from MAPP Online Pro will closely match their actual performance.

MAPP Online Pro predictions are requested by the client software and sent via the Internet to the high-speed Meyer Sound servers where high-resolution (magnitude and phase) polar data is processed with sophisticated acoustical prediction algorithms. The resulting predictions are then returned to and displayed on the local computer running the MAPP Online Pro client software.

MAPP Online Pro Applications

With MAPP Online Pro, you can:

- Simulate different loudspeaker configurations to refine system design and zero-in on the best coverage for intended audience areas
- Monitor loudspeaker interactions to locate destructive interferences so that loudspeakers can be re-aimed and repositioned as necessary
- Place microphones anywhere in the sound field and predict their frequency response, impulse response, and sound pressure
- Determine delay settings for fill loudspeakers
- Try out virtual Galileo equalization to determine optimum real-world settings for the best system response
- Automatically calculate load information for arrays to determine rigging capacities, front-to-back weight distribution, and center of gravity
- Generate and export system images for client presentations

Using MAPP Online Pro

MAPP Online Pro is compatible with the following operating systems:

- Windows
- Linux®
- Unix®
- Mac OS® 10.4 and later

Additional system requirements and recommendations are available on the MAPP Online Pro website:

http://www.meyersound.com/products/mapponline/pro/

Downloading and Installing MAPP Online Pro

To use MAPP Online Pro, you can register at the following link:

http://www.meyersound.com/products/mapponline/pro/register/

After entering your registration information, an email will be sent to you with your user name, password, and the MAPP Online Pro download location. On-screen instructions will guide you through the download and installation process.

The MAPP Online Pro client software is regularly upgraded to add support for the latest Meyer Sound loudspeakers, as well as to add feature enhancements. Most upgrades are downloaded automatically when logging on to a MAPP Online Pro session. The MAPP Online Pro database includes nearly all of the current Meyer Sound loudspeakers, subwoofers, and processors.

THE SIM 3 MEASUREMENT SYSTEM

The SIM 3 audio analyzer is a high-resolution audio measurement system comprised of software, hardware, microphones, and accessory cables. SIM 3 is optimized for measuring audio frequencies with resolutions up 1/48th of an octave, allowing you to apply precise corrections to balance system response using frequency and phase domain information.

Source Independent Measurement Technique

The SIM 3 audio analyzer implements Meyer Sound's source independent measurement technique, a dual-channel method that accommodates statistically unpredictable excitation signals. Any excitation signal within a desired frequency range can be used to obtain highly accurate measurements for acoustical or electronic systems. For example, concert halls and loudspeaker systems can be captured during a performance and used as a SIM 3 test signal, so you can:

- View measurement data as amplitude versus time (impulse response) or amplitude and phase versus frequency (frequency response)
- Utilize a single-channel spectrum mode
- View frequency domain data with a logarithmic frequency axis
- Determine and internally compensate for propagation delays using the SIM 3 Delay Finder

SIM 3 Applications

SIM 3's main applications are testing and aligning loudspeaker systems, which entails:

- Measuring propagation delays between subsystems to determine appropriate polarities and delay times
- Measuring variations in frequency response caused by the acoustical environment and the placement and interaction of loudspeakers to determine corrective equalization
- Optimizing subwoofer integrations
- Optimizing loudspeaker arrays

SIM 3 can also be used in the following applications:

- Microphone calibration and equalization
- Transducer evaluation and correction
- Echo detection and analysis
- Vibration analysis
- Architectural acoustics
- Underwater acoustics

APPENDIX A: INSTALLING THE OPTIONAL RAIN HOODS

The optional UPJunior rain hoods provide all-weather protection for its user panel and connectors in fixed, outdoor installations. The rain hood is available in both vertical (PN 40.173.020.01) and horizontal (PN 40.173.021.01) models.

NOTE: When using the rain hoods with loudspeaker arrays with the MAAM-UPJunior array adapter, the maximum splay angle between loudspeakers is 40°.

INSTALLING THE VERTICAL RAIN HOOD

To install the UPJunior vertical rain hood:

1. Attach any required cables to the UPJunior and then orient the loudspeaker vertically.
2. Remove the eight screws from the back sides of the UPJunior.

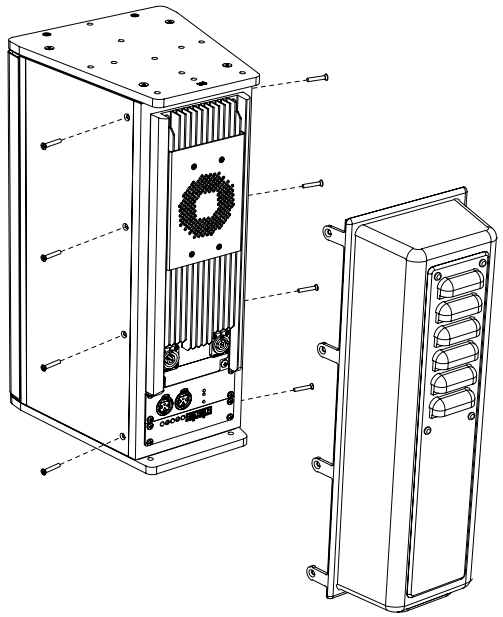

3. Carefully fit the rain hood over the UPJunior rear panel so the screw holes are aligned.
4. Insert the previously removed eight screws and tighten them.

INSTALLING THE HORIZONTAL RAIN HOOD

To install the UPJunior horizontal rain hood:

1. Attach any required cables to the UPJunior and then orient the loudspeaker horizontally.
2. Remove the six screws from the back sides of the UPJunior.

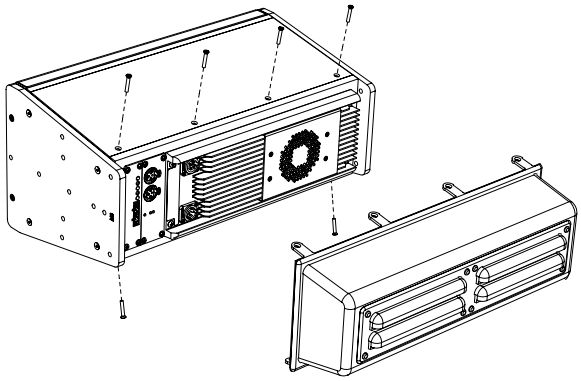

3. Carefully fit the rain hood over the UPJunior rear panel so the screw holes are aligned.
4. Insert the previously removed six screws and tighten them.

APPENDIX B: BASIC TROUBLESHOOTING

This section includes some basic troubleshooting suggestions for configuring your Meyer Sound loudspeaker.

The On/Temp LED is not lit and there is no loudspeaker output.

- Make sure the AC power cable is the correct type for the region's voltage and that it is securely connected to the loudspeaker's AC inlet. Unplug the other end of the AC cable and then plug it back in.
- Use an AC voltmeter to verify that the AC voltage is within 90–264 V AC.
- Contact Meyer Sound Technical Support.

The On/Temp LED is green but there is no loudspeaker output.

- Verify that the audio source (mixer, EQ, delay) is sending a valid signal. If possible, monitor the audio source with headphones.
- Make sure the XLR source cable is securely connected to the loudspeaker's XLR Input connector.
- Verify that the XLR source cable is functioning by substituting another cable or by using the cable in question in a working system.
- Connect the audio source to another loudspeaker to verify the signal is within the proper range. Turn the source level down before reconnecting the audio source and increase the level slowly to avoid a sudden blast of sound.

Hum or noise is produced by the loudspeaker.

- Disconnect the XLR source cable. If the noise goes away, there is a problem somewhere in the audio source's signal path. If the noise persists, there is a problem with the loudspeaker (return the unit to the factory or the nearest authorized service center).
- Make sure the XLR source cable is securely connected to the loudspeaker's XLR Input connector.
- Connect the audio source to another loudspeaker to verify the signal and that it is within the proper range. Turn the source level down before reconnecting the audio source and increase the level slowly to avoid a sudden blast of sound.
- Hum or noise can be produced by a ground loop. Since the UPJunior is effectively ground-lifted, the loop may be broken elsewhere in the system.

The loudspeaker output is distorted or compressed but the Limit LED is not lit.

- Make sure the XLR source cable is securely connected to the loudspeaker's XLR Input connector.
- Connect the audio source to another loudspeaker to verify the signal is within the proper range. Turn the source level down before reconnecting the audio source and increase the level slowly to avoid a sudden blast of sound.
- If possible, monitor the audio source with headphones.

The loudspeaker output is highly compressed and the Limit LEDs are yellow.

- Turn down the level of the audio source connected to the loudspeaker.

The On/Temp LED is red.

This occurs when the heatsink temperature reaches 75°C (185°F) and indicates that the amplifier is thermally overloaded.

- Turn down the level of the audio source connected to the loudspeaker.
- Make sure the amplifier's fan is working properly.
- Make sure there is sufficient air flow around the loudspeaker.
- Avoid exposing the heatsink to direct sunlight if the ambient temperature is high.

See Chapter 3, "Amplification and Audio" for details about amplifier limiting and the amplifier cooling system.

Only the high- or low-frequency drivers are outputting sound.

- Make sure the audio source is full-range and has not been filtered at an earlier stage in the signal chain. If possible, monitor the audio source with headphones.

- Connect the audio source to another loudspeaker to verify the signal is full-range. Turn the source level down before reconnecting the audio source and increase the level slowly to avoid a sudden blast of sound.
- Use a sine wave or pink noise generator to send a variety of frequencies to the loudspeaker.

APPENDIX C: UPJUNIOR SPECIFICATIONS

ACOUSTICAL	
Operating Frequency Range	70 Hz – 20 kHz **Note:** Recommended maximum operating frequency range. Response depends on loading conditions and room acoustics.
Frequency Response	76 Hz – 18 kHz ±4 dB **Note:** Measured free field with 1/3 octave frequency resolution at 4 meters.
Phase Response	250 Hz – 18 kHz ±45°
Maximum Peak SPL	126 dB **Note:** Measured with music referred to 1 meter.
Dynamic Range	>110 dB
Coverage	80° x 50° **Note:** The UPJunior horn can be rotated to provide an 80° x 50° coverage pattern in either the horizontal or vertical plane.
Crossover	3.5 kHz **Note:** At this frequency, the transducers produce equal sound pressure levels.
TRANSDUCERS	
Low Frequency	One 8” cone driver with neodymium magnet Nominal impedance: 4 Ω Voice coil size: 1.5” Power-handling capability: 300 W (AES) **Note:** Power handling measured using AES standards: transducer driven continuously for two hours with band limited noise signal having a 6 dB peak-average ratio.
High Frequency	One 2” compression driver Nominal impedance: 12 Ω Voice coil size: 2” Diaphragm size: 2” Exit size: 0.75” Power-handling capability: 100 W (AES) **Note:** Power handling measured using AES standards: transducer driven continuously for two hours with band limited noise signal having a 6 dB peak-average ratio.
Note: High frequency driver is coupled to an 80° x 50° constant-directivity horn.	
AUDIO INPUT	
Type	Differential, electronically balanced
Maximum Common Mode Range	±15 V DC, clamped to earth for voltage transient protection
Connectors	Female XLR input with male XLR loop output
Input Impedance	10 kΩ differential between pins 2 and 3
Wiring	Pin 1: Chassis/earth through 220 kΩ, 1000 pF, 15 V clamp network to provide virtual ground lift at audio frequencies Pin 2: Signal + Pin 3: Signal – (optional polarity reversal switch) Case: Earth ground and chassis **Note:** An optional input module is available that includes a polarity reversal switch and attenuator (0–18 dB).
DC Blocking	Differential DC blocking on input up to maximum common mode voltage
CMRR	>50 dB, typically 80 dB (50–500 Hz)

RF Filter	Common mode: 425 kHz Differential mode: 142 kHz
TIM Filter	<80 kHz, integral to signal processing
Nominal Input Sensitivity	0 dBV (1 V rms, 1.4 V peak) continuous average is typically the onset of limiting for noise and music
Input Level	Audio source must be capable of producing +20 dBV (10 V rms, 14 V peak) into 600 Ω to produce maximum peak SPL over the operating bandwidth of the loudspeaker
AMPLIFIER	
Type	Two-channel complementary MOSFET output stages (class AB/bridged)
Output Power	300 W total **Note:** Wattage rating is based on the maximum unclipped burst sine-wave rms voltage the amplifier will produce into the nominal load impedance — low and high channels 30 V rms (42 V peak) into load impedance.
THD, IM TIM	<.02%
Load Capacity	4 Ω low channel, 12 Ω high channel
Cooling	Forced air cooling over amplifier heatsink
AC POWER	
Connectors	PowerCon with looping output
Voltage Selection	Automatic
Safety Agency Rated Operating Voltage	100–240 V AC; 50/60 Hz
Turn On/Turn Off Points	90–264 V AC; 50/60 Hz
Note: No automatic turn-off voltages. Voltages above 265 V AC are fuse protected but may cause permanent damage to the power supply. Voltages below 90 V AC may result in intermittent operation.	
Current Draw	
Idle Current	0.448 A rms (115 V AC); 0.285 A rms (230 V AC); 0.497 A rms (100 V AC)
Maximum Long-Term Continuous Current	2.55 A rms (115 V AC); 1.55 A rms (230 V AC); 2.75 A rms (100 V AC)
Burst Current	2.9 A rms (115 V AC); 1.7 A rms (230 V AC); 3.2 A rms (100 V AC)
Ultimate Short-Term Peak Current	12.0 A peak (115 V AC); 9.0 A peak (230 V AC); 13.0 A peak (100 V AC)
Inrush Current	15.0 A peak (115 V AC); 13.0 A peak (230 V AC); 15.0 A peak (100 V AC)
Note: Current draw for a single loudspeaker. Loop output not used.	
PHYSICAL	
Enclosure	Premium birch plywood
Finish	Black textured
Protective Grille	Powder-coated hex stamped steel
Rigging	QuickFly rigging options
Dimensions	9.00” W x 19.04” H x 10.20” D (228.60 mm x 483.55 mm x 259.08 mm)
Weight	28.00 lbs (12.70 kg)

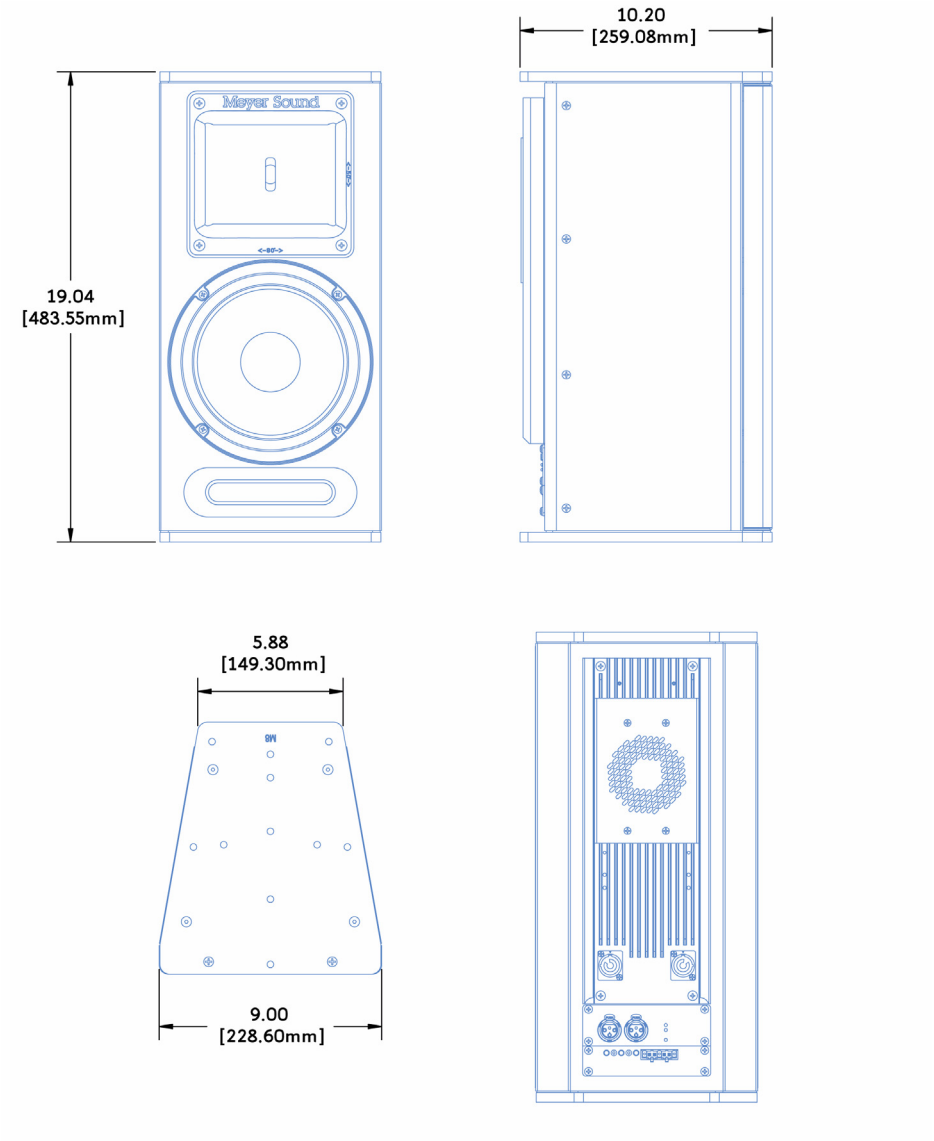

UPJunior Dimensions



Meyer Sound Laboratories Inc.
2832 San Pablo Avenue
Berkeley, CA 94702

www.meyersound.com
T: +1 510 486.1166
F: +1 510 486.8356

© 2007
Meyer Sound Laboratories Inc.
05.173.005.01 A