UPJ-1P Compact VariO™ Loudspeaker

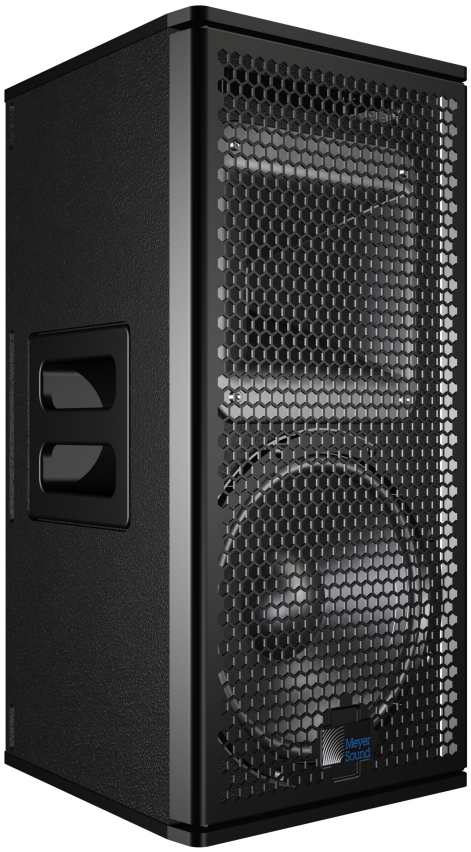

Keep these important operating instructions.
Check www.meyersound.com for updates.

© 2003–2021
Meyer Sound Laboratories, Incorporated. All rights reserved.

UPJ-1P Compact VariO Loudspeaker Operating Instructions, PN 05.134.400.01 C
The contents of this manual are furnished for informational purposes only, are subject to change without notice, and should not be construed as a commitment by Meyer Sound Laboratories Inc. Meyer Sound assumes no responsibility or liability for any errors or inaccuracies that may appear in this manual. Except as permitted by applicable copyright law, no part of this publication may be reproduced, stored in a retrieval system, or transmitted, in any form or by any means, electronic, mechanical, recording or otherwise, without prior written permission from Meyer Sound.

The following is a partial list of Meyer Sound trademarks and service marks:
650-P®, 650-R2®, Acheron®, AlignALink, B-Noise, Bluehorn, BroadbandQ®, CAL, Callisto®, Compass®, Compass Go by Meyer Sound, Compass RMS, Composite EQ, Constellation®, CueConsole, CueStation, D-Mitri®, EXP®, Galileo®, GuideALink, Intelligent AC, LCS, LEO®, LEO-M, LEOPARD, LYON, M Series, M1D, M2D, M3D, MAPP, MAPP Online Pro®, MAPP 3D, MAPP XT, Matrix3, MatrixLink, M'elodie®, MICA®, MILO®, MINA, MSL-4®, MultiSense, QuickFly®, QuietCool, REM®, RMS, SIM®, Spacemap®, SpeakerSense, Stella, Thinking Sound®, TM Array, TruPower®, TruShaping®, UltraSeries, U-Shaping®, VariO, VRAS, Wild Tracks.

All third-party trademarks mentioned herein are the property of their respective trademark holders.

IMPORTANT SAFETY INSTRUCTIONS

These symbols indicate important safety or operating features in this booklet and on the frame or chassis:

SYMBOLS USED

		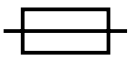		
Dangerous voltages: risk of electric shock	**Important operating instructions**	**Replaceable Fuse**	**Protective earth ground**	**Hot surface: do not touch**
Gefährliche Spannungen: Stromschlaggefahr	**Hinweis auf wichtige Punkte der Betriebsanleitung**	**Austauschbare Sicherung**	**Schutzerde**	**Heiße Oberfläche: nicht berühren**
Pour indiquer les risques résultant de tensions dangereuses	**Instructions d'utilisation importantes**	**Fusible remplaçable**	**Terre de protection**	**Surface chaude: ne pas toucher**
Para indicar voltajes peligrosos	**Instrucciones importantes de funcionamiento y/o Mantenimiento**	**Fusible reemplazable**	**Toma de tierra de protección**	**Superficie caliente: no tocar**

1. Read these instructions.
2. Keep these instructions.
3. Heed all warnings.
4. Follow all instructions.
5. Do not use this apparatus near water.
6. Clean only with dry cloth.
7. Do not block any ventilation openings. Install in accordance with Meyer Sound's installation instructions.
8. Do not install near any heat sources such as radiators, heat registers, stoves, or other apparatus that produce heat.
9. Do not defeat the safety purpose of the grounding-type plug. A grounding type plug has two blades and a third grounding prong. The third prong is provided for your safety. If the provided plug does not fit into your outlet, consult an electrician for replacement of the obsolete outlet.
10. Protect the power cord from being walked on or pinched, particularly at plugs, convenience receptacles, and the point where they exit from the apparatus. The AC mains plug or appliance coupler shall remain readily accessible for operation.
11. Only use attachments/accessories specified by Meyer Sound.
12. Use only with the caster rails or rigging specified by Meyer Sound, or sold with the apparatus. Handles are for carrying only.
13. Unplug this apparatus during lightning storms or when unused for long periods of time.
14. If equipped with an external fuse holder, the replaceable fuse is the only user-serviceable item. When replacing the fuse, only use the same type and the same value.
15. Refer all other servicing to qualified service personnel. Servicing is required when the apparatus has been damaged in any way, such as when the power-supply cord or plug has been damaged; liquid has been spilled or objects have fallen into the apparatus; rain or moisture has entered the apparatus; the apparatus has been dropped; or when for undetermined reasons the apparatus does not operate normally.



WARNING: To reduce the risk of fire or electric shock, do not expose this apparatus to rain or moisture. Do not install the apparatus in wet or humid locations without using weather protection equipment from Meyer Sound.



WARNING: Class I apparatus shall be connected to a mains socket outlet with a protective earthing connection.



CAUTION: Disconnect the mains plug before disconnecting the power cord from the loudspeaker.

English

- To reduce the risk of electric shock, disconnect the apparatus from the AC mains before installing audio cable. Reconnect the power cord only after making all signal connections.
- Connect the apparatus to a two-pole, three-wire grounding mains receptacle. The receptacle must be connected to a fuse or circuit breaker. Connection to any other type of receptacle poses a shock hazard and may violate local electrical codes.
- Do not install the apparatus in wet or humid locations without using weather protection equipment from Meyer Sound.
- Do not allow water or any foreign object to get inside the apparatus. Do not put objects containing liquid on or near the unit.
- To reduce the risk of overheating the apparatus, avoid exposing it to direct sunlight. Do not install the unit near heat-emitting appliances, such as a room heater or stove.
- If equipped with an external fuse holder, the replaceable fuse is the only item that can be serviced by the user. When replacing the fuse, only use the same type and value.
- This apparatus contains potentially hazardous voltages. Do not attempt to disassemble the unit. The only user-serviceable part is the fuse. All other repairs should be performed only by factory-trained service personnel.

Deutsch

- Zur Minimierung der Gefahr eines elektrischen Schlages trennen Sie das Produkt vor dem Anschluss von Audio-und/oder Steuerleitungen vom Stromnetz. Das Netzkabel darf erst nach Herstellung aller Signalverbindungen wieder eingesteckt werden.
- Das Produkt an eine vorschriftsgemäss installierte dreipolige Netzsteckdose (Phase, Neutralleiter, Schutzleiter) anschließen. Die Steckdose muss vorschriftsgemäß mit einer Sicherung oder einem Leitungsschutzschalter abgesichert sein. Das Anschließen des Produkts an eine anders ausgeführte Stromversorgung kann gegen Vorschriften verstossen und zu Stromunfällen führen.
- Das Produkt nicht an einem Ort aufstellen, an dem es direkter Wassereinwirkung oder übermäßig hoher Luftfeuchtigkeit ausgesetzt werden könnte, solange es sich nicht um ein Produkt handelt, dass mit der Meyer Sound Weather Protection Option ausgestattet ist.
- Vermeiden Sie das Eindringen von Wasser oder Fremdkörpern in das Innere des Produkts. Stellen Sie keine Objekte, die Flüssigkeit enthalten, auf oder neben dem Produkt ab.
- Um ein Überhitzen des Produkts zu verhindern, halten Sie das Gerät von direkter Sonneneinstrahlung fern und stellen Sie es nicht in der Nähe von wärmeabstrahlenden Geräten (z.B. Heizgerät oder Herd) auf.
- Bei Ausstattung mit einem externen Sicherungshalter ist die austauschbare Sicherung das einzige Gerät, das vom Benutzer gewartet werden kann. Verwenden Sie beim Austausch der Sicherung nur den gleichen Typ und Wert.
- Dieses Gerät enthält möglicherweise gefährliche Spannungen. Versuchen Sie nicht, das Gerät zu zerlegen. Der einzige vom Benutzer zu wartende Teil ist die Sicherung. Alle anderen Reparaturen dürfen nur von im Werk geschultem Servicepersonal ausgeführt werden.

Français

- Pour éviter tout risque d’électrocution, débranchez l’enceinte de la prise secteur avant de mettre en place le câble audio.Ne rebranchez le cordon secteur qu’après avoir procédé à toutes les connexions de signal audio
- Brancher l'appareil sur une prise secteur à trois fils et deux pôles avec mise à la terre. La prise doit être reliée à un fusible ou à un disjoncteur. Le branchement à tout autre type de prise présente un risque de choc électrique et peut enfreindre les codes locaux de l'électricité.
- N’installez pas l’enceinte dans des endroits humides ou en présence d’eau sans utiliser d’équipements de protection adéquats fournis par Meyer Sound.
- Ne laissez pas d’eau ou d’objet étranger, quel qu’il soit, pénétrer à l’intérieur de l’enceinte. Ne posez pas d’objet contenant du liquide sur ou à proximité de l’enceinte.
- Pour réduire les risques de surchauffe, évitez d’exposer directement l’enceinte aux rayons du soleil. Ne l’installez pas à proximité de sources de chaleur, radiateur ou four par exemple.
- S'il est équipé d'un porte-fusible externe, le fusible remplaçable est le seul élément qui peut être réparé par l'utilisateur. Lors du remplacement du fusible, n'utilisez que le même type et la même valeur.
- Cet appareil contient des tensions potentiellement dangereuses. N'essayez pas de démonter l'appareil.Le fusible est la seule pièce réparable par l'utilisateur. Toutes les autres réparations doivent être effectuées uniquement par du personnel de maintenance formé en usine.

Español

- Para reducir el riesgo de descarga eléctrica, desconecte el aparato de la red eléctrica antes de instalar el cable de audio. Vuelva a conectar el cable de alimentación sólo después de realizar todas las conexiones de señal.

- Conecte el aparato a una toma de corriente de tres hilos y dos polos con conexión a tierra. El receptáculo debe estar conectado a un fusible o disyuntor. La conexión a cualquier otro tipo de receptáculo representa un riesgo de descarga eléctrica y puede violar los códigos eléctricos locales.
- No instale el aparato en lugares húmedos o mojados sin usar el equipo de protección contra intemperie de Meyer Sound.
- No permita que penetre agua u otros objetos extraños en el interior del aparato. No coloque objetos que contengan líquido sobre o cerca de la unidad.
- Para reducir el riesgo de sobrecalentamiento del aparato, evite exponerlo a la luz solar directa. No instale la unidad cerca de aparatos que emitan calor, como un calefactor o una estufa
- Si está equipado con un portafusibles externo, el fusible reemplazable es el único elemento que puede ser reparado por el usuario. Cuando reemplace el fusible, use solamente el mismo tipo y valor.
- Este aparato contiene voltajes potencialmente peligrosos. No intente desmontar la unidad. La única pieza que el usuario puede reparar es el fusible. Todas las demás reparaciones deben ser realizadas únicamente por personal de servicio capacitado de fábrica.

CONTENTS

Important Safety Instructions iii

Symbols Used iii

Chapter 1: Introduction 1

How to Use This Manual 1
Introducing the UPJ-1P Compact VariO Loudspeaker 1

Chapter 2: Power Requirements 3

The AC Connectors 3
Wiring AC Power Cables 3
UPJ-1P Current Requirements 4
UPJ-1P Voltage Requirements 4
Powering Up the UPJ-1P 5
Electrical Safety Issues 5

Chapter 3: Amplification and Audio 7

Audio Input Modules 7
Amplifier Cooling System 9

Chapter 4: QuickFly Rigging 11

UPJ-1P Rigging Optional Accessories 12
Basic Eye Bolt Rigging 13
Pole-Mounting the UPJ-1P 13
The MUB-UPJ U-Bracket 14
The MYA-UPJ Mounting Yoke 16
The MAAM-UPJ Array Adapter 16
The MAA-UPJ Array Adapter 19

Chapter 5: RMS Remote Monitoring System 21

Compass RMS Software 21
Resetting the RMS Module 22

Chapter 6: System Design and Integration Tools 23

MAPP System Design Tool 23
Galileo GALAXY Network Platform 24

Appendix A: The VariO Horn 25

Rotating the VariO Horn 25

Appendix B: Installing the Optional Rain Hoods 27

Installing the Vertical Rain Hood 27
Installing the Horizontal Rain Hood 27

Appendix C: UPJ-1P Specifications 29

Acoustical, Electrical, Physical, and Environment Specifications 29
UPJ-1P Compliance 31

UPJ-1P Dimensions 32
MUB-UPJ Dimensions 33
MYA-UPJ Dimensions 34

CHAPTER 1: INTRODUCTION

HOW TO USE THIS MANUAL

Please read these instructions in their entirety before configuring a Meyer Sound loudspeaker system. In particular, pay close attention to material related to safety issues.

As you read these instructions, you will encounter the following icons for notes, tips, and cautions:

NOTE: A note identifies an important or useful piece of information relating to the topic under discussion.

TIP: A tip offers a helpful tip relevant to the topic at hand.

CAUTION: A caution gives notice that an action may have serious consequences and could cause harm to equipment or personnel, or could cause delays or other problems.

Information and specifications are subject to change. Updates and supplementary information are available at meyersound.com.

Meyer Sound Technical Support is available at:

- **Tel:** +1 510 486.1166
  (Monday through Friday 9:00 am to 5:00 pm PST)
- **Tel:** +1 510 486.0657 (after hours support)
- **Web:** meyersound.com/support

INTRODUCING THE UPJ-1P COMPACT VARIO LOUDSPEAKER

The UPJ-1P compact VariO™ loudspeaker combines the advantages of self-powered systems with the placement and arraying flexibility afforded by a rotatable horn. Compact and lightweight, the UPJ-1P produces a linear peak SPL output of 125 dB SPL with M-noise, measured free-field at 4 meters and referred to 1 meter, making it suitable for use as either a primary loudspeaker in small rooms, or as a fill, delay, effects, or under-balcony loudspeaker in large or distributed systems.

The UPJ-1P's low-frequency section employs a 10-inch neodymium magnet cone driver, while the high-frequency section uses a 3-inch diaphragm compression driver. The VariO horn can be easily rotated to provide an 80-degree by 50-degree coverage pattern with either a horizontal or vertical orientation. A two-channel class AB/Bridged power amplifier with complementary MOSFET output stages provides a total output power of 550 W peak. The optional RMS™ module allows comprehensive monitoring of all key system parameters from a Mac® or Windows®-based computer.



UPJ-1P Compact VariO Loudspeaker

The UPJ-1P's end plates — made of heavy-duty, high-strength, corrosion-resistant 6061-T6 aluminum — provide a wide range of mounting, flying, and arraying options. Strategically placed M8 threaded points allow basic eye bolt suspension as well as easy connection to pole-mounting options. QuickFly® rigging options, which include array adapters (also made of 6061-T6 aluminum), a yoke, and a U-bracket, attach easily and securely to the UPJ-1P, allowing it to be mounted or flown as either a single cabinet or within arrays.



UPJ-1P with MYA-UPJ Mounting Yoke



UPJ-1P Pole-Mounted with 35MM Pole Stand Adapter (PN 40.010.971.01)



UPJ-1Ps with MAA-UPJ Array Adapters and Eye bolts

CHAPTER 2: POWER REQUIREMENTS

Self-powered and compact, the UPJ-1P loudspeaker combines advanced loudspeaker technology with equally advanced power capabilities. Understanding power distribution, voltage and current requirements, as well as electrical safety issues, is critical to the safe operation of the UPJ-1P.

THE AC CONNECTORS

The user panel on the back of the UPJ-1P includes the following AC connectors:



Figure 1: UPJ-1P AC Input (left) and AC Loop Output (right) Connectors

The AC Input Connector (Blue)

The blue AC Input connector supplies power to the UPJ-1P. The connector is rated at 20 amps and uses a PowerCon AC mains locking connector that prevents accidental disconnections. A 10-foot AC power cable, rated at 15 amps, is included with each UPJ-1P. If replacing the included AC power cable, make sure to use a cable with the appropriate power plug (on the other end) for the area in which the UPJ-1P will operate.

The AC Input connector also supplies power to any additional loudspeakers connected to the UPJ-1P's gray Loop Output connector.

The AC Loop Output Connector (Gray)

The gray AC Loop Output connector allows multiple UPJ-1Ps to be looped and powered from a single power source. Connect the AC Loop Output of the first UPJ-1P to the AC Input of the second UPJ-1P, and so forth. The AC Loop Output uses a PowerCon AC mains locking connector that prevents accidental disconnections.

The maximum number of UPJ-1Ps that can be looped from the Loop Output connector is determined by the voltage of the power source, the circuit breaker rating, and the rating of the AC power cable connected to the first UPJ-1P.

Table 1: Number of UPJ-1Ps that Can Be Looped with AC Power

Circuit Breaker/ Connector Rating	115 V AC	230 V AC	100 V AC
15 amps	3 looped (4 total)	7 looped (8 total)	2 looped (3 total)
20 amps	4 looped (5 total)	10 looped (11 total)	3 looped (4 total)

NOTE: The current draw for the UPJ-1P is dynamic and fluctuates as operating levels change. The numbers in Table 1 assume that operating levels are normal and not such that the loudspeakers are constantly limiting.

Each UPJ-1P loudspeaker ships with one AC looping connector for making AC looping cables. Assembled AC looping cables are available from Meyer Sound.

CAUTION: Do not exceed the current capability of the UPJ-1P's 20-amp Input Connector. When looping loudspeakers, consider the total current draw for all loudspeakers on the circuit, including the first loudspeaker.

WIRING AC POWER CABLES

UPJ-1P ships with a gray powerCON 20 cable mount connector, rated at 20 A, for assembling AC looping cables (Figure 2). The pins on the powerCON 20 cable mount connector are labeled as follows:

- L (Line)
- N (Neutral)
- PE (Protective Earth or Ground)

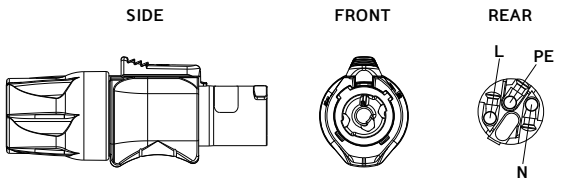

Figure 2: powerCON 20 Cable Mount Connector

How AC power cables are wired is determined by the type of AC power distribution system used. When wiring AC

power cables for single-line systems, use one of the wiring schemes shown in Figure 3 and described in Table 2:

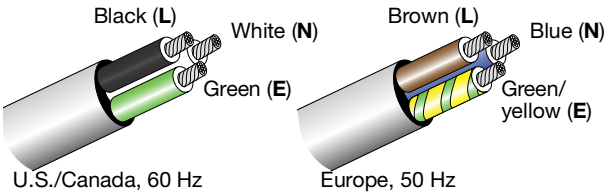

Figure 3: AC Wiring Scheme

Table 2: AC Wiring Scheme

Wire Color		Attach to the Following Terminal
U.S. / Canada 60 Hz	European 50 Hz	
Black	Brown	Hot or live (L)
White	Blue	Neutral (N)
Green	Green and Yellow	Protective earth / ground (E or PE)

CAUTION: When wiring AC power cables and distribution systems, it is important to preserve AC line polarity and connect the earth ground at both ends of the cable.The UPJ-1P requires a grounded connection. Always use a grounded outlet and plug. It is extremely important that the system be properly grounded to operate safely and properly. Do not ground-lift the AC cable.

UPJ-1P CURRENT REQUIREMENTS

The current draw for the UPJ-1P is dynamic and fluctuates as its operating levels change. Because different cables and circuit breakers heat up at varying rates, it is important to understand the following types of current ratings and how they affect circuit breaker and cable specifications.

- **Idle Current** — The maximum rms current during idle periods.
- **Maximum Long-Term Continuous Current** — The maximum rms current during a period of at least 10 seconds. The Maximum Long-Term Continuous Current is used to calculate temperature increases for cables, to ensure that cable size and gauge conform to electrical code standards. The current rating is also used as a rating for slow-reacting thermal breakers. In addition, the Maximum Long-Term Continuous Current can be used to calculate the AC looping capability of the UPJ-1P.
- **Burst Current** — The maximum rms current during a period of around one second. The Burst Current is used as a rating for magnetic breakers. It is also used for calculating the peak voltage drop in long AC cable runs according to the following formula:

  V pk (drop) = I pk x R (cable total)
- **Maximum Instantaneous Peak Current** — A rating for magnetic breakers.
- **Inrush Current** — The spike of initial current presented when powering on.

Use the Table 3 as a guide for selecting cable gauge and circuit breaker ratings for the system's operating voltage.

Table 3: UPJ-1P Current Draw

Current Draw	115 V AC	230 V AC	100 V AC
Idle Current	0.41 A rms	0.33 A rms	0.42 A rms
Maximum Long-Term Continuous Current	3.2 A rms	1.6 A rms	3.7 A rms
Burst Current	5.0 A rms	2.5 A rms	5.8 A rms
Maximum Instantaneous Peak Current	17.0 A peak	8.5 A peak	20.0 A peak
Inrush Current	15.0 A peak	13.0 A peak	15.0 A peak

The minimum electrical service amperage required by a UPJ-1P loudspeaker system is the sum of the Maximum Long-Term Continuous Current for each loudspeaker. An additional 30% above the minimum amperage is recommended to prevent peak voltage drops at the service entry.

NOTE: For best performance, the AC cable voltage drop should not exceed 10 V, or 10 percent at 115 V and 5 percent at 230 V. Make sure that even with AC voltage drops that the AC voltage always remains within the operating window.

UPJ-1P VOLTAGE REQUIREMENTS

UPJ-1P operates as intended when receiving AC voltage within the following range:

- 90–264 V AC, 50–60 Hz

If the voltage drops below 90 V, the loudspeaker uses stored power to continue operating temporarily; the loudspeaker powers off if the voltage does not return to its operating range.

If the voltage rises above 275 V, the power supply could become damaged.

⚠ **CAUTION:** The power source for UPJ-1P should always operate within the required operating range, at least a few volts from the upper and lower limits. This approach ensures that AC voltage variations from the service entry—or peak voltage drops due to cable runs—will not cause the loudspeaker's amplifier to cycle on and off or cause damage to the power supply.

POWERING UP THE UPJ-1P

When AC power is applied to the UPJ-1P, its Intelligent AC™ power supply automatically selects the correct operating voltage, allowing it to be used internationally without manually setting voltage switches. In addition, Intelligent AC also suppresses high-voltage transients up to several kilovolts, filters common mode and differential mode radio frequencies (EMI), and sustains operation temporarily during low-voltage periods.

When powering up the UPJ-1P, the following startup events take place over several seconds.

1. Audio output is muted.
2. Voltage is detected and the power supply mode is automatically adjusted as necessary.
3. The fan turns on and the power supply ramps up.
4. The green On/Temp LED on the user panel lights up, indicating the loudspeaker is ready to output audio.

⚠ **CAUTION:** If the On/Temp LED does not light up, or the UPJ-1P does not output audio after ten seconds, remove AC power immediately and verify that the voltage is within the required range. If the problem persists, contact Meyer Sound Technical Support.

ELECTRICAL SAFETY ISSUES

Pay close attention to these important electrical and safety issues.

- The UPJ-1P requires a grounded outlet. Always use a grounded outlet and plug.

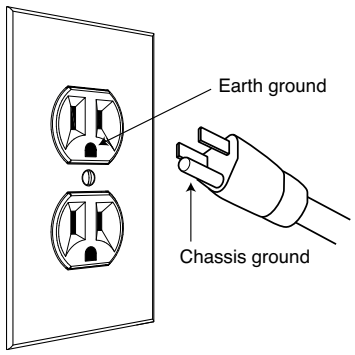

- Do not use a ground-lifting adapter or cut the AC cable ground pin.

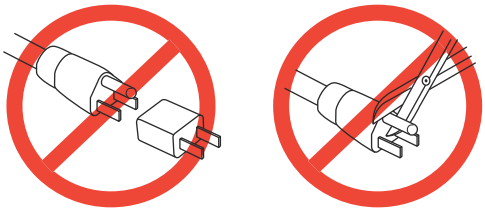

- Do not exceed the current capability of the UPJ-1P's 20-amp AC Input connector. When looping loudspeakers, consider the total current draw for all loudspeakers on the circuit, including the first loudspeaker.
- Make sure the AC power cable for UPJ-1P has the appropriate power plug (on the other end) for the area in which the unit will operate. In addition, the AC power cable must be rated for the total current draw of all loudspeakers looped from the power source.
- Do not operate the unit if the power cable is frayed or broken.
- Keep all liquids away from the UPJ-1P to avoid hazards from electrical shock.

CHAPTER 3: AMPLIFICATION AND AUDIO

The low- and high-frequency drivers in the UPJ-1P are powered by a two-channel proprietary Meyer Sound amplifier with MOSFET output stages. The audio signal is processed with an electronic crossover, correction filters for phase and frequency response, and driver protection circuitry. Each channel has peak and rms limiters that prevent driver over-excursion and regulate the temperature of the voice coil.

The user panel on the back of the UPJ-1P has two slots for modules. The top slot contains an audio input module (described in this chapter). The bottom slot is reserved for the optional RMS module, used for connecting to the RMS remote monitoring system (see “RMS Remote Monitoring System” on page 21).

AUDIO INPUT MODULES

The UPJ-1P can be equipped with either of two audio input modules: The *Looping Audio Input* module or the *Looping, Polarity, and Attenuating Audio Input* module. Both audio input modules have input and looping connectors, and LEDs for monitoring temperature and limiting. In addition, the Looping, Polarity, and Attenuating Audio Input module has a switch for swapping the signal’s polarity, and a knob for attenuating the input signal level to –18 dB.

The Looping Audio Input Module

The Looping Audio Input module includes the connectors and LEDs described below (reference Figure 4).

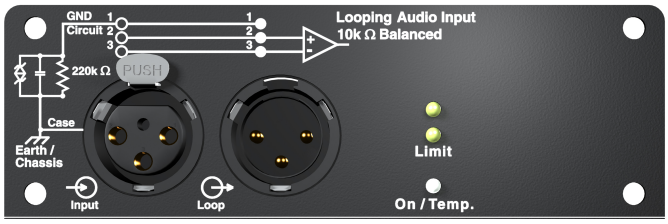

Figure 4: Looping Audio Input Module

Input Connector

The female 3-pin XLR Input connector accepts a balanced audio signal with an input impedance of 10 kOhm. The connector uses the following wiring:

- **Pin 1** — 220 kOhm to chassis and earth ground (ESD clamped)
- **Pin 2** — Signal (+)
- **Pin 3** — Signal (–)
- **Case** — Earth (AC) ground and chassis

Pins 2 and 3 carry the input as a differential signal. Pin 1 is connected to earth through a 220 kOhm, 1000 pF, 15 V clamped network. This circuitry provides virtual ground lift for audio frequencies while allowing unwanted signals to bleed to ground. Make sure to use standard, balanced XLR audio cables with all three pins connected on both ends. Telescopic grounding is not recommended, and shorting an input connector pin to the case may cause a ground loop, resulting in hum.

TIP: If unwanted noise or hiss is produced by the loudspeaker, disconnect its input cable. If the noise stops, there is most likely nothing wrong with the loudspeaker. To locate the source of the noise, check the audio cable, source audio, and AC power.

NOTE: Optional XLR 5-pin connectors that accommodate both balanced audio and RMS signals are available with the following wiring scheme:

- **Pin 1** — 220 kOhm to chassis and earth ground (ESD clamped)
- **Pin 2** — Signal (+)
- **Pin 3** — Signal (–)
- **Pin 4** — RMS (polarity insensitive)
- **Pin 5** — RMS (polarity insensitive)
- **Case** — Earth (AC) ground and chassis

Loop Connector

The male XLR Loop connector allows multiple UPJ-1P loudspeakers to be looped from a single audio source. Connect the Loop output of the first UPJ-1P to the Input of the second UPJ-1P, and so forth. The Loop connector is wired in parallel to the Input connector and transmits the unbuffered source signal even when the UPJ-1P is powered off.

To avoid distortion when looping multiple UPJ-1Ps, make sure the source device can drive the total load impedance of the looped loudspeakers. The source device must be capable of delivering a minimum of 20 dBV (10 V rms into 600 ohms) to yield the maximum peak SPL over the operating bandwidth of the loudspeakers.

To calculate the load impedance for the looped loudspeakers, divide 10 kOhms (the input impedance for a single UPJ-1P) by the number of looped loudspeakers. For example, the load impedance for 10 UPJ-1Ps is 1000 ohms (10 kOhms / 10). To drive this number of looped loudspeakers, the source device should have an output impedance of 100 ohms or less. This same rule applies when looping UPJ-1Ps with other self-powered Meyer Sound loudspeakers and subwoofers.

NOTE: Most source devices are capable of driving loads no smaller than 10 times their output impedance.

NOTE: Make sure that all cabling for looped loudspeakers is wired correctly (Pin 1 to Pin 1, Pin 2 to Pin 2, and so forth) to prevent the polarity from being reversed. If one or more loudspeakers in a system have reversed polarity, frequency response and coverage can be significantly degraded.

Limit LEDs

The low- and high-frequency drivers for the UPJ-1P are powered by separate amplifier channels, each with their own limiter. Limiting activity is indicated with the two yellow Limit LEDs (Figure 5. The top LED indicates limiting for the high-frequency channel and the bottom LED indicates limiting for the low-frequency channel. When engaged, a channel's limiter not only protects the driver, but also prevents signal peaks from causing excessive distortion in the amplifier's channel, thereby preserving headroom and maintaining smooth frequency responses at high levels. When a channel's level returns to normal, below the limiter's threshold, limiting ceases.

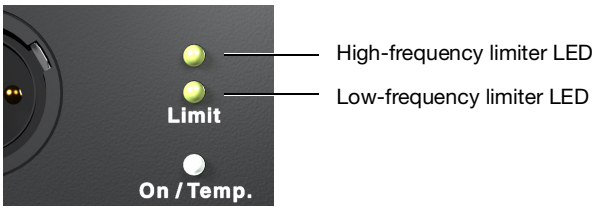

Figure 5: Limit LEDs

The UPJ-1P performs within its acoustical specifications at normal temperatures when the Limit LEDs are unlit, or if the LEDs are lit for two seconds or less and then turn off for at least one second. If an LED remains lit for longer than three seconds, that channel enters hard limiting where:

- Increases to the input level have no effect.
- Distortion increases due to clipping and nonlinear driver operation.
- The driver is subjected to excessive heat and excursion, which will compromise its life span and may eventually lead to damage over time.

NOTE: The Limit LEDs indicate when a safe, optimum level is exceeded. If a UPJ-1P begins to limit before reaching the required SPL, consider adding more loudspeakers to the system.

The Optional Looping, Polarity, and Attenuating Audio Input Module

The Looping, Polarity, and Attenuating Audio Input module has the same input and output connectors and LEDs found on the Looping Audio Input module (see “The Looping Audio Input Module” on page 7). In addition, it also has a Polarity switch and Attenuator knob.

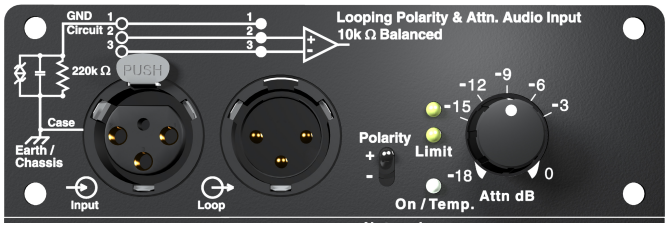

Figure 6: Looping, Polarity, and Attenuating Audio Input Module

Polarity Switch

The Polarity switch enables changing the polarity of the source signal. When the switch is in the up (+) position, pin 2 is hot relative to pin 3, resulting in a positive pressure wave when a positive signal is applied to pin 2. When the switch is in the down (–) position, pin 3 is hot relative to pin 2, resulting in a positive pressure wave when a positive signal is applied to pin 3.

NOTE: The Polarity switch does not affect the signal coming from the Loop connector. The Loop connector is wired in parallel to the Input connector and transmits the unbuffered source signal (even when the loudspeaker is powered off).

Attenuator Knob

The Attenuator knob reduces the source signal level connected to the Input connector. The knob offers an attenuation range of 0 dB (no attenuation), when turned all the way to the right, to –18 db, when turned all the way to the left.

NOTE: The Attenuator knob does not affect the signal coming from the Loop connector. The Loop connector is wired in parallel to the Input connector and transmits the unbuffered source signal (even when the loudspeaker is powered off).

AMPLIFIER COOLING SYSTEM

The amplifier for the UPJ-1P uses natural convection and forced air in its cooling system. The amplifier’s heat sink allows natural convection cooling from the air flowing near its fins. A low-noise fan forces air to the fins, ensuring low temperatures for the amplifier even when the loudspeaker is used under high ambient temperatures, tightly-packed conditions, and at high continuous levels.

On/Temp LED

When the UPJ-1P is initially powered on, its On/Temp LED turns green. The LED turns red when the temperature of the UPJ-1P’s heat sink reaches 75 °C (167 °F), at which point its fan switches to high speed. While the UPJ-1P will continue to operate normally when the On/Temp LED is red, this is an indication that the unit is reaching its maximum dissipation and a reduction in SPL is recommended.

When the heatsink temperature decreases to 65 °C (149 °F), the On/Temp LED changes from red to green.

TIP: When the UPJ-1P is connected to an RMS network, the RMS software provides additional feedback on the loudspeaker’s operating temperature. For more information, see “RMS Remote Monitoring System” on page 21.

CAUTION: The heat sink for the UPJ-1P can reach temperatures of up to 75 °C (167 °F) during normal operation. Use extreme caution when approaching the rear of the loudspeaker.

CAUTION: To keep the UPJ-1P from getting too hot, allow for proper ventilation around the loudspeaker, especially when it is operated in tightly-packed conditions.

CHAPTER 4: QUICKFLY RIGGING

The UPJ-1P is compatible with Meyer Sound's QuickFly system, a comprehensive collection of custom-designed rigging, flying, and mounting options. Comprised of rugged, reliable, and easy-to-configure components, QuickFly enables deployment of UPJ-1Ps as either individual loudspeakers or as arrays at precise angles to take full advantage of their directional components. The UPJ-1P's top and bottom plates are constructed of heavy-duty, high-strength, corrosion-resistant 6061-T6 aluminum and include threaded metric holes (for M8 screws) for easy connection to QuickFly rigging and third-party mounting options.

Important Safety Considerations!

When installing Meyer Sound loudspeakers, the following precautions should always be observed:

- All Meyer Sound products must be used in accordance with local, state, federal, and industry regulations. It is the owner's and user's responsibility to evaluate the reliability of any rigging method for their application. Rigging should only be carried out by experienced professionals.
- Use mounting and rigging hardware that has been rated to meet or exceed the weight being hung.
- Make sure to attach mounting hardware to the building's structural components (studs or joists), and not just to the wall surface. Verify that the building's structure and the anchors used for the installation will safely support the total weight of the mounted loudspeakers.
- Use mounting hardware appropriate for the surface where the loudspeaker will be installed.
- Make sure bolts and eye bolts are tightened securely. Meyer Sound recommends using Loctite® on eye bolt threads and safety cables.
- Inspect mounting and rigging hardware regularly. Immediately replace any worn or damaged components.

UPJ-1P RIGGING OPTIONAL ACCESSORIES

Meyer Sound offers a number of rigging options that facilitate a wide variety of configurations (Table 4).

Table 4: UPJ-1P Rigging Options

Model	Features
MPK-POLE Adjustable Pole Mount Kit (PN 40.010.973.01)	Adjustable length 927–1524 mm (36.5–60 in) pole with assisted lift. Lower shaft fits 35 mm cups or use the removable M20 threaded lug for added stability. Upper shaft includes a PAS-M20 Adapter Sleeve to fit loudspeakers with 35 mm and M20 internal pole mounts onto a 35 mm speaker stand and the PAS-M8 Adapter Sleeve to fit loudspeakers with M8 rigging points. (Can also buy the PAS-M20 and PAS-M8 Adapter Sleeves separately). Additional 35 mm to 38 mm (1.5 in) adapter for bottom of pole included.
PAS-M8 Adapter Sleeve M8 (35 MM Pole) (PN.40.010.975.01)	The PAS-M8 Adapter Sleeve allows the user to connect a 35 mm pole to the ULTRA-X20 M8 rig nuts on the top/bottom of the loudspeaker.
MYA-UPJ Mounting Yoke Kit (PN 40.134.035.01)	The MYA-UPJ Yoke suspends a single UPJ-1P loudspeaker and supports a wide range of horizontal and vertical adjustments. The mounting yoke's bottom bar attaches to the bottom plate of the UPJ-1P with two M8 mounting screws (included). A "C" or "G" hanging clamp and steel safety cable (not included) are required to suspend the MYA-UPJ mounting yoke.
MUB-UPJ U-Bracket Kit (PN 40.134.081.01)	The MUB UPJ-1P U-Bracket allows a single UPJ-1P loudspeaker to be mounted to a wall (in either vertical or horizontal orientations), to the ceiling or onto the floor. The kit includes two M8 bolts/washers and two M8 knobs/washers.
MAAM-UPJ Array Adapter Kit (PN 40.134.030.02)	The MAAM-UPJ Array Adapter provides a solid connection between UPJ-1P loudspeakers to form horizontal and vertical arrays of up to three loudspeakers. The front adjustment slot enables adjustment of the distance between the loudspeakers to achieve splay angles from 20° to 80°. The MAAM-UPJ array adapter kit includes two plates, eight M8 screws and washers, and four M8 knobs (for floor monitor use only). A single kit can create an array of two UPJ-1P loudspeakers; two kits are required for an array of three loudspeakers.
MAA-UPJ Array Adapter Kit (PN 40.134.030.01)	The MAA-UPJ array adapter provides similar capabilities as the MAAM-UPJ array adapter but without the floor monitor functionality. The MAA-UPJ array adapter provides a solid connection between UPJ-1P loudspeakers to form horizontal and vertical arrays of up to three loudspeakers. The front adjustment slot facilitates adjustment of the distance between the loudspeakers to achieve the desired splay angle from 20° to 80°. The MAA-UPJ array adapter kit includes two plates and eight M8 screws and washers. A single kit can create an array of two UPJ-1P loudspeakers; two kits are required for an array of three loudspeakers.

BASIC EYE BOLT RIGGING

The UPJ-1P ships with one M8 threaded, 1.25 X 13 mm eye bolt. The eye bolt attaches to the top or bottom plates of the UPJ-1P and can be used to suspend the loudspeaker.

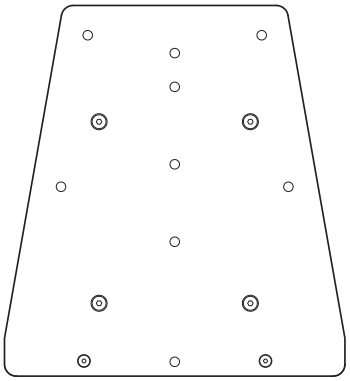

Figure 7: UPJ-1P Top Plate with Threaded Holes for eye bolts

A single UPJ-1P can be suspended with one eye bolt. However, two eye bolts provide more safety and stability, as well the capability of aiming and tilting the UPJ-1P for targeted coverage.

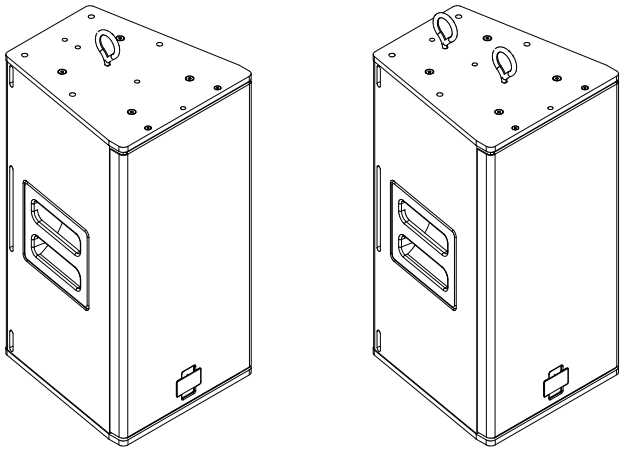

Figure 8: UPJ-1P with One eye bolt (Left) and Two eye bolts (Right)

NOTE: Up to two UPJ-1Ps, oriented vertically, can be suspended with the eye bolts supplied by Meyer Sound at a 7:1 safety factor. For this configuration, the top UPJ-1P would have two eye bolts installed on its top plate and two eye bolts installed on its bottom plate, for connecting to the second UPJ-1P. Additional M8 eye bolts are available from Meyer Sound. (PN 40.134.011.01)

POLE-MOUNTING THE UPJ-1P

A single UPJ-1P may be mounted on a pole with a pole-mount adapter, such as Meyer Sound's 35MM Pole Stand Adapter (PN 40.010.971.01)).

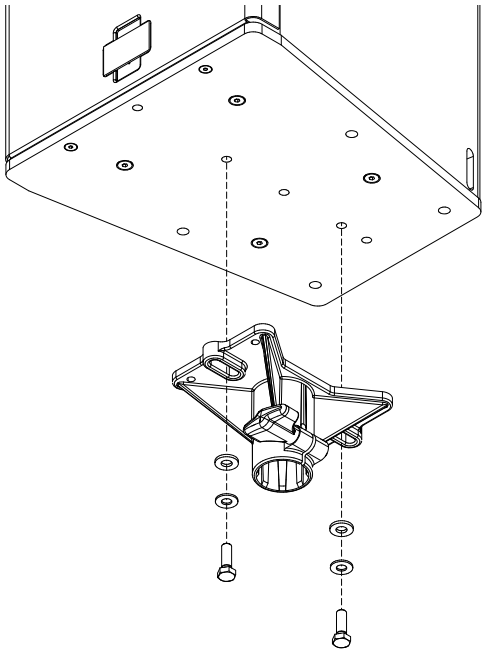

Figure 9: Attaching a Pole Stand Adapter to UPJ-1P Bottom

THE MUB-UPJ U-BRACKET

NOTE: The MUB-UPJ U-Bracket replaces the MLB-UPJ L-Brackets.

Use the MUB-UPJ U-bracket (PN 40.134.081.01) to mount a single UPJ-1P on walls, ceilings, and stage lips, to mount up to two UPJ-1Ps on a tripod, or to mount an array of UPJ-1Ps. The U-bracket's adjustment slot permits adjustment of how close the UPJ-1P is located to the mounting surface and at what angle the loudspeaker will be positioned. The MUB-UPJ U-bracket kit includes two M8, 16 mm bolts.

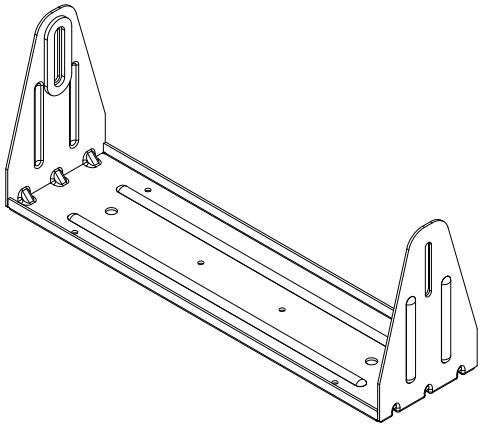

Figure 10: MUB-UPJ U-Bracket

NOTE: When mounting a single UPJ-1P with the MUB-UP U-bracket, the bracket should be fastened to the center holes on the loudspeaker's top and bottom plates. When flying an array of UPJ-1Ps from the MUB-UPJ U-bracket, the bracket should be fastened to the holes toward the rear of the loudspeaker plates to compensate for the shift in center of gravity.

MUB-UPJ U-Bracket Load Ratings for Flown UPJ-1Ps

An array of up to three UPJ-1Ps can be flown with the MUB-UPJ U-bracket at a 7:1 safety factor. When flying any number of UPJ-1Ps with the MUB-UPJ U-bracket, the U bracket must be secured to the mounting surface with either the two 1/2-inch center holes or the four 1/4-inch corner holes.

Table 5: MUB-UPJ U-Bracket Load Ratings

Holes	Safety Factor	Number of Flown UPJ-1Ps
Two 1/2-inch Center Holes	7:1	Up to 2 (with the load evenly distributed on the two points)
Four 1/4-inch Corner Holes	7:1	Up to 2 (with the load evenly distributed on the four points)
Two 1/4-inch Center Holes	–	Not supported for flown applications; use only with pole-mount adapter

CAUTION: The 1/4-inch center holes are not rated for flown loudspeakers. These holes should only be used for pole-mounting with an adapter.

Wall-Mounting with the MUB-UPJ

The MUB-UPJ U-bracket enables mounting of the UPJ-1P either vertically or horizontally on a wall.

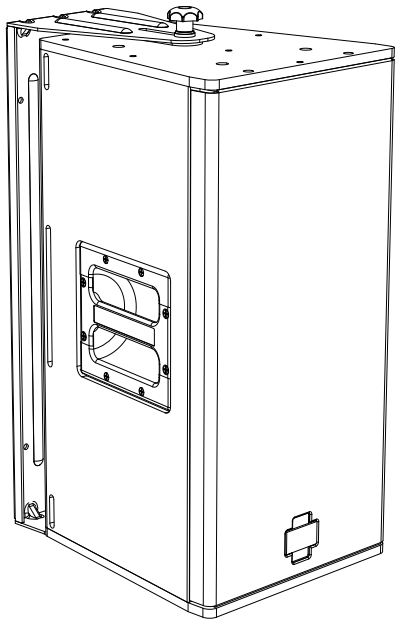

Figure 11: MUB-UPJ, Vertical Wall Mount

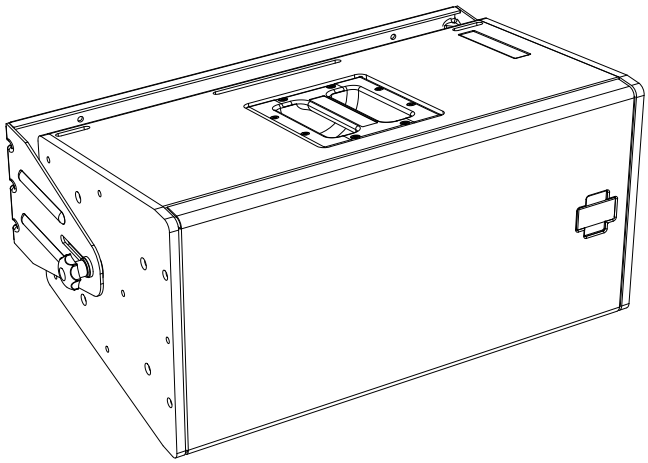

Figure 12: MUB-UPJ, Horizontal Wall Mount

Ceiling-Mounting with the MUB-UPJ

The UPJ-1P can be mounted on a ceiling, underbalcony, or canopy area with the MUB-UPJ U-bracket.

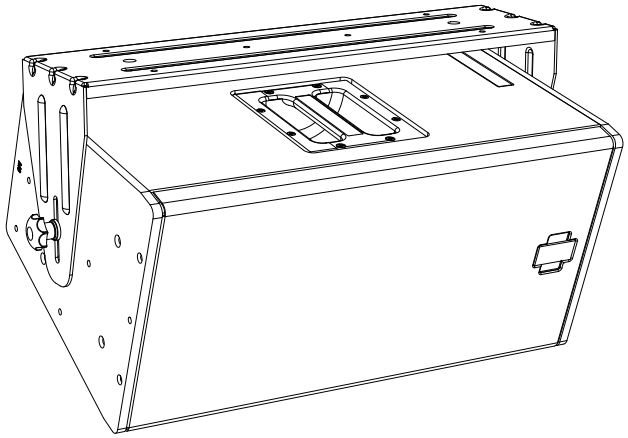

Figure 13: MUB-UPJ, Ceiling-Mounted

Floor-Mounting with the MUB-UPJ

The UPJ-1P can be mounted on a floor or stage lip (for front-fill applications) with the MUB-UPJ U-bracket.

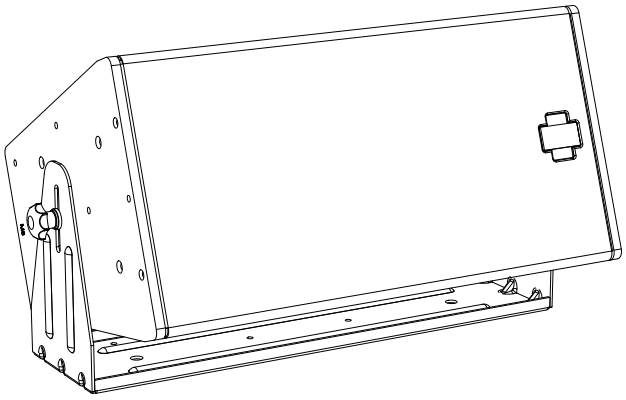

Figure 14: MUB-UPJ, Floor-Mounted

Pole-Mounting with the MUB-UPJ

Use the MUB-UPJ U-bracket to pole-mount a single UPJ-1P with a pole adapter. This combination allows the UPJ-1P's angle to be adjusted. The U-bracket can also be used to pole-mount a vertical array of up to two UPJ-1Ps with array adapters.

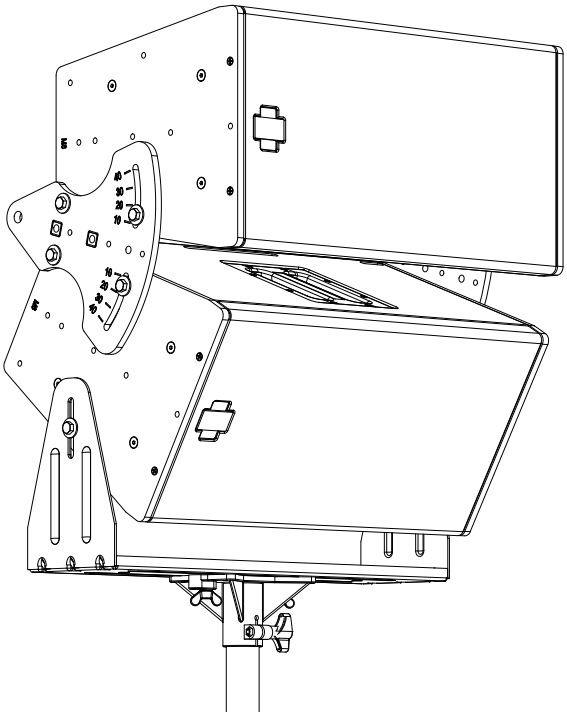

Figure 15: MUB-UPJ with MAAM-UPJ Array, Pole-Mounted

The MUB-UPJ U-bracket should be secured to the pole adapter with the bracket's two 1/4-inch center holes.

⚠ **CAUTION:** When pole-mounting UPJ-1Ps (up to two) with the MUB-UPJ U-bracket, make sure the pole and pole adapter have been rated to support the total weight of the loudspeakers. Observe all safety precautions specified by the manufacturer.

THE MYA-UPJ MOUNTING YOKE

The MYA-UPJ mounting yoke (PN 40.134.035.01) suspends a single UPJ-1P loudspeaker and allows a wide range of horizontal and vertical adjustment. The mounting yoke's bottom bar attaches to the bottom plate of the UPJ-1P with two M8 mounting screws (included). A "C" or "G" hanging clamp and steel safety cable (not included) are required to suspend the MYA-UPJ mounting yoke.

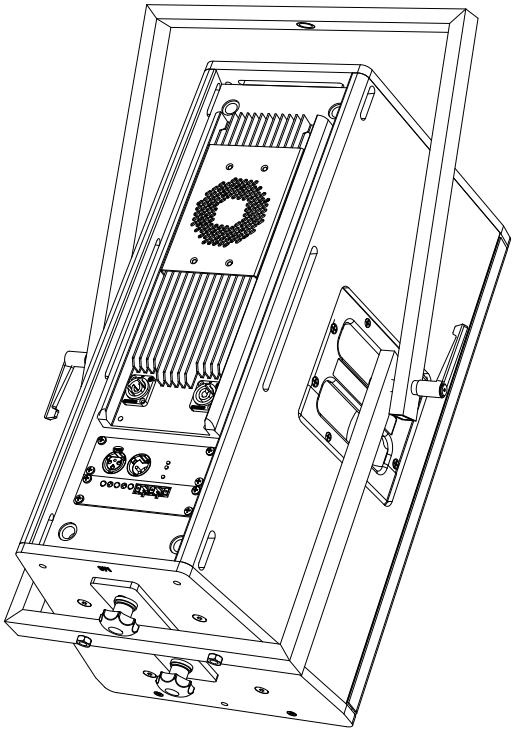

Figure 16: MYA-UPJ Mounting Yoke

NOTE: The top bar of the MYA-UPJ mounting yoke accommodates hanging clamps with standard 1/2-inch or 12 mm bolts.

THE MAAM-UPJ ARRAY ADAPTER

The MAAM-UPJ array adapter (PN 40.134.030.02) provides a solid connection between UPJ-1P loudspeakers to form horizontal and vertical arrays of up to three loudspeakers. The front adjustment slot is used to adjust the distance between the loudspeakers to achieve the desired splay angle (from 20 degrees to 80 degrees) and coverage. The MAAM-UPJ array adapter kit includes two plates, eight M8 screws and washers, and four M8 knobs (for floor monitor use only). A single kit can create an array of two UPJ-1P loudspeakers; two kits are required for an array of three loudspeakers.

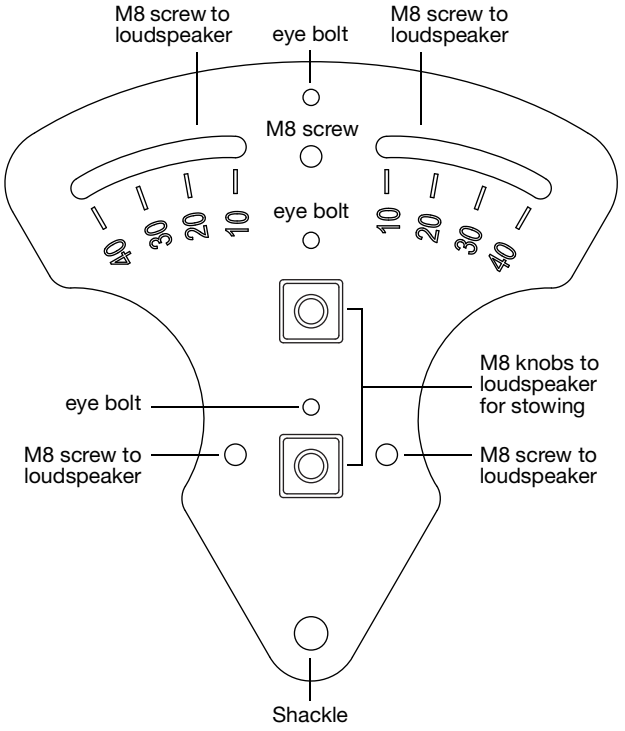

Figure 17: MAAM-UPJ Array Adapter Plate

Arrays are assembled by attaching the array adapter plates to the top and bottom plates of the UPJ-1Ps and securing them with the included M8 screws and washers.

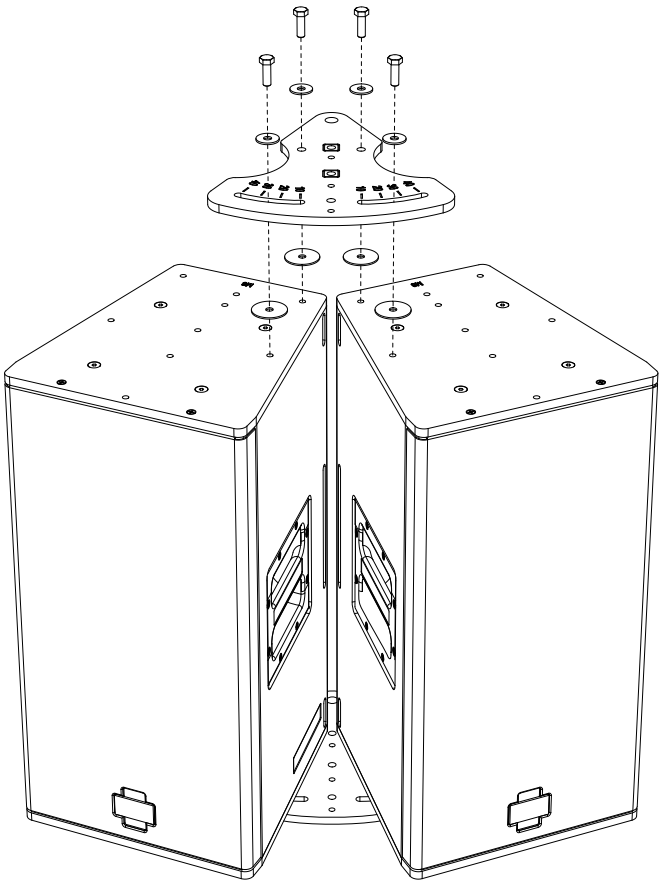

Figure 18: Attaching an Array Adapter Plate

The MAAM-UPJ array adapter can also be used to position a UPJ-1P as a floor monitor with adjustable angles. When positioning the UPJ-1P as a floor monitor, the array adapter plates attach to the UPJ-1P with the included M8 knobs.

CAUTION: The MAAM-UPJ array adapters support a maximum of three UPJ-1Ps in an array.

CAUTION: The M8 knobs included with the MAAM-UPJ array adapter should only be used to secure the plates to the UPJ-1P when positioning it as a floor monitor. The M8 knobs should not be used for flown applications.

Horizontal Arrays with the MAAM-UPJ

Horizontal arrays with the MAAM-UPJ array adapter can be flown by attaching eye bolts to the UPJ-1P plates or directly to the array adapter plates. Shackles can also be attached to the adapter plate's rear pickup holes for additional support or to provide control over the array's vertical tilt.

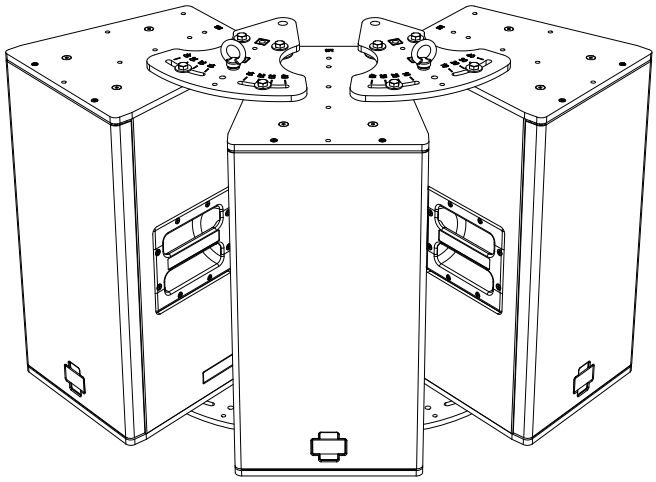

Figure 19: MAAM-UPJ, Horizontal Array

TIP: To create optimum coverage in a horizontal array, the splay angle between UPJ-1P loudspeakers should be 50 degrees when the VariO horns are in the 80-degrees horizontal by 50-degrees vertical position (this yields a horizontal coverage of 130 degrees). Angles less than 50 degrees between the loudspeakers can cause too much interaction between the loudspeakers, while angles greater than 50 degrees can yield holes in the coverage.

Vertical Arrays with the MAAM-UPJ

Vertical arrays with the MAAM-UPJ array adapter can be flown by attaching eye bolts to the UPJ-1P plates or directly to the array adapter plates. Shackles can also be attached to the adapter plate's rear pickup holes for additional support or to provide control over the vertical tilt.

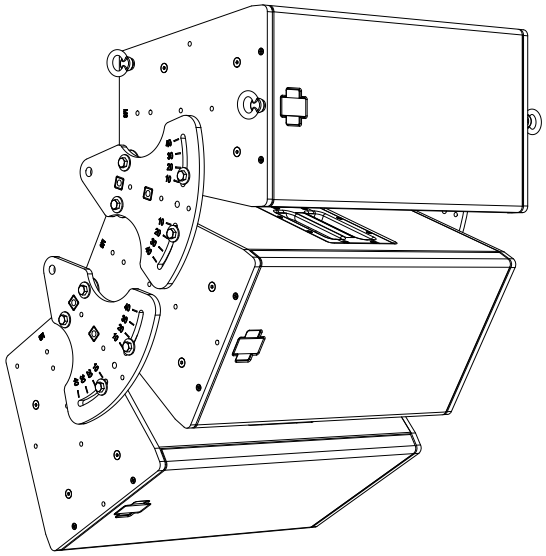

Figure 20: MAAM-UPJ, Vertical Array with eye bolts

Vertical arrays of up to three UPJ-1Ps with the MAAM-UPJ array adapter can be ceiling mounted by attaching an MUB-UPJ U-bracket to the top UPJ-1P.

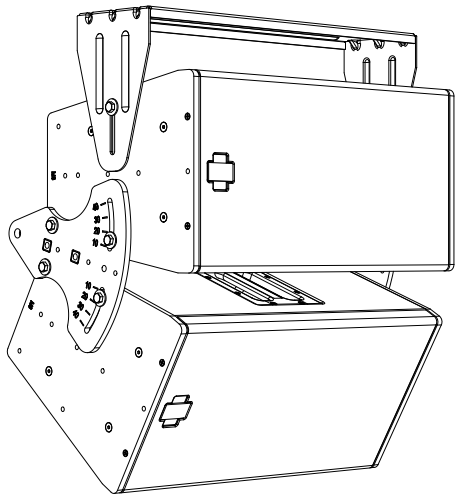

Figure 21: MAAM-UPJ, Vertical Array Ceiling-Mounted

NOTE: When flying an array of UPJ-1Ps from the MUB-UPJ U-bracket, the bracket should be fastened to the holes toward the rear of the loudspeaker plates, to compensate for the shift in center of gravity. In addition, shackles can be attached to the array adapter plate's rear pickup holes for additional support or to provide control over the vertical tilt.

TIP: To create optimum coverage in a vertical array, the splay angle between UPJ-1P loudspeakers should be 30 degrees when the VariO horns are in the 80-degrees horizontal by 50-degrees vertical position (this yields a vertical coverage of 80 degrees). Angles less than 30 degrees between the loudspeakers can cause too much interaction between the loudspeakers, while angles greater than 30 degrees can yield holes in the coverage.

Floor Monitoring with the MAAM-UPJ

The MAAM-UPJ array adapter can be used for positioning the UPJ-1P as a floor monitor, with the front adjustment slot being used to adjust the angle of the loudspeaker. The following illustrations show the stowed position for when the UPJ-1P is not in use (Figure 22), as well as some of the more common angle configurations.

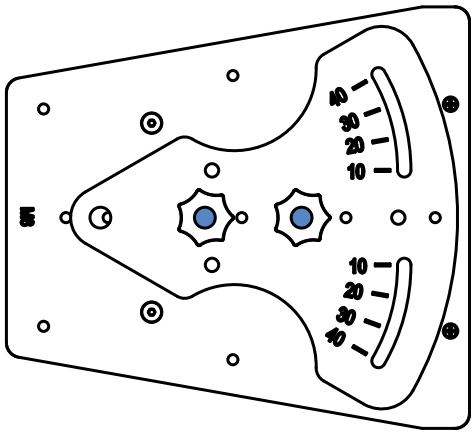

Figure 22: MAAM-UPJ with UPJ-1P Stowed

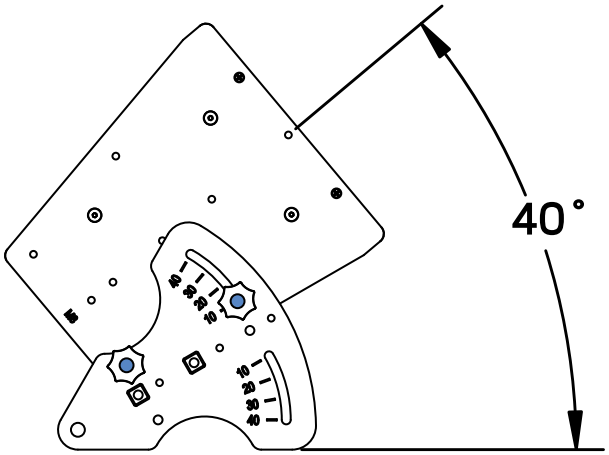

Figure 23: MAAM-UPJ with UPJ-1P at 40 Degrees

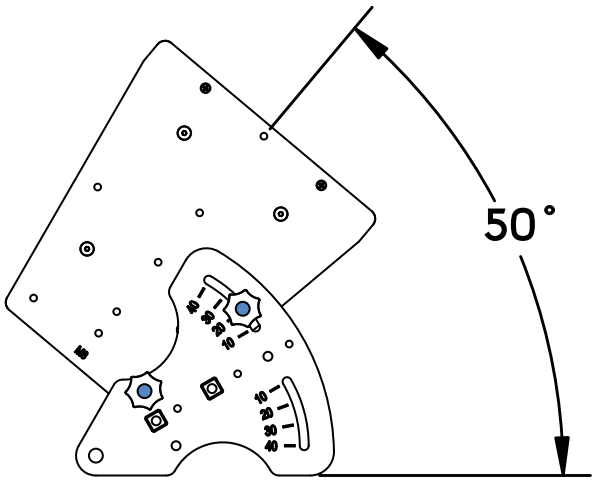

Figure 24: MAAM-UPJ with UPJ-1P at 50 Degrees

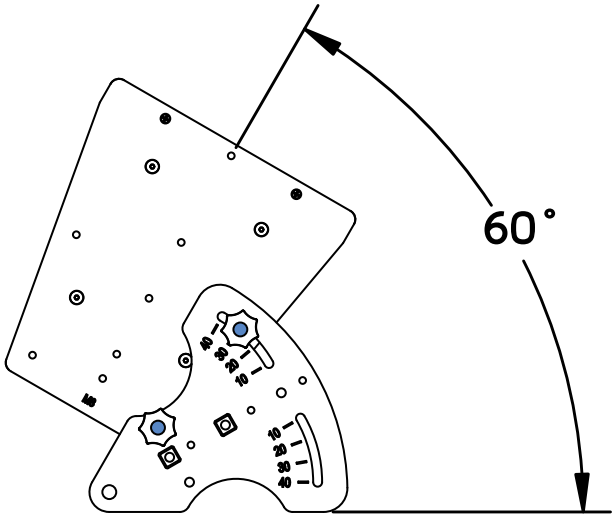

Figure 25: MAAM-UPJ with UPJ-1P at 60 Degrees

THE MAA-UPJ ARRAY ADAPTER

The MAA-UPJ array adapter (PN 40.134.030.01) provides similar capabilities as the MAAM-UPJ array adapter but without the floor monitor functionality. The MAA-UPJ array adapter provides a solid connection between UPJ-1P loudspeakers to form horizontal and vertical arrays of up to three loudspeakers. The front adjustment slot is used to adjust the distance between the loudspeakers to achieve the desired splay angle (from 20 degrees to 80 degrees) and coverage. The MAA-UPJ array adapter kit includes two plates and eight M8 screws and washers. A single kit can create an array of two UPJ-1P loudspeakers; two kits are required for an array of three loudspeakers.

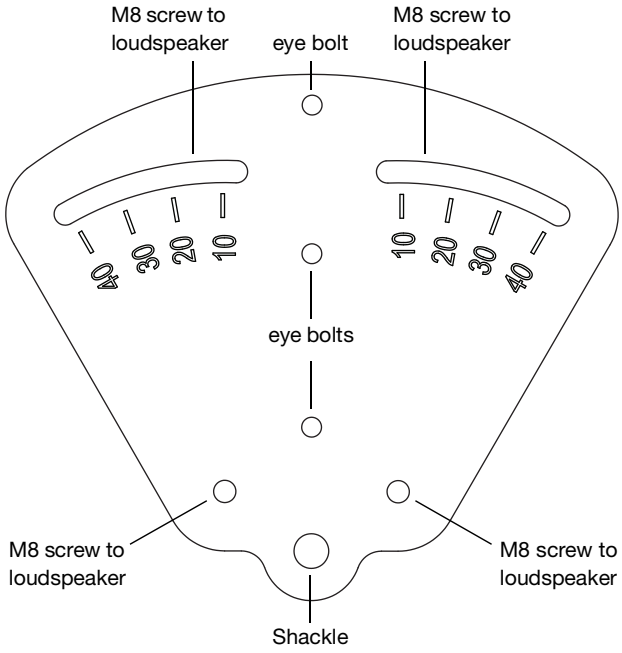

Figure 26: MAA-UPJ Array Adapter Plate

Arrays are assembled by attaching the array adapter plates to the top and bottom plates of the UPJ-1Ps and securing them with the included M8 screws and washers.

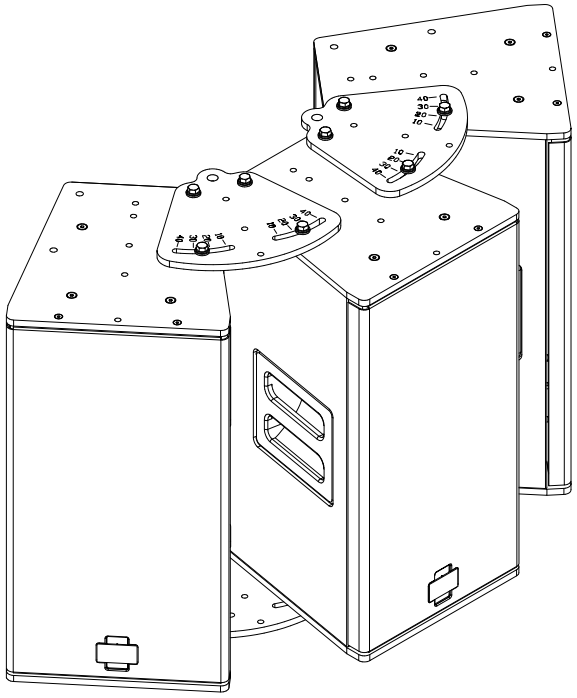

Figure 27: MAA-UPJ, Horizontal Array

CHAPTER 5: RMS REMOTE MONITORING SYSTEM

UPJ-1P optionally includes an RMS remote monitoring system module, allowing the loudspeaker to be connected to an RMS network. RMS reports, in real time, the status and power usage of multiple Meyer Sound loudspeakers from a Mac or Windows-based computer. The RMServer™ communicates with Meyer Sound loudspeakers equipped with RMS modules. RMServer is a compact, Ethernet-based hardware unit with two FT-10 RMS data ports. RMServer stores system configurations internally, eliminating most manual data entry. Systems can be monitored from a computer at front-of-house or backstage, or from a laptop anywhere within the venue over WiFi.

NOTE: For the latest RMS system requirements, visit meyersound.com.

NOTE: RMS does not control AC power.

COMPASS RMS SOFTWARE

Compass RMS™ software provides extensive system status and performance data for each loudspeaker, including amplifier voltage, limiting activity, power output, fan and driver status, as well as mute and solo capability. Loudspeakers are added to the RMS network and assigned a node name during a one-time discovery procedure. Once loudspeakers are identified on the RMS network, they appear in Compass RMS as icons that can be customized (Figure 28).



Figure 28: Compass RMS Window

Individual loudspeakers can be physically identified with the Wink option in RMS, which lights the Wink LED on the RMS module of that particular loudspeaker. Conversely, a loudspeaker can be identified in Compass RMS by pressing the Identify button on the loudspeaker's RMS module.

Loudspeaker icons can be arranged in Compass RMS and saved as pages to represent how the loudspeakers have been deployed in the system. Multiple pages can be saved and recalled for specific performances and venues.

THE RMS MODULE

The RMS module is installed in the bottom slot of the user panel on the back of the Meyer Sound loudspeaker. The RMS user panel has three LEDs, two buttons, and two Network connectors.

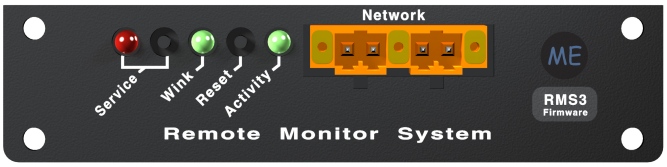

Figure 29: RMS Module

NOTE: The LEDs and buttons on the RMS user panel are used exclusively by RMS and have no effect on the acoustical or electrical activity of the UPJ-1P.

Service LED (Red)

The red Service LED provides the following feedback:

- When unlit, the loudspeaker is successfully connected to the network and commissioned.
- When blinking once every two seconds, the loudspeaker is connected to the network but not yet commissioned in the RMS software.
- When lit continuously, the loudspeaker's RMS hardware has failed and may indicate that the module has been damaged (contact Meyer Sound Technical Support).

Service Button

Pressing the Service button identifies the loudspeaker on the RMS network and notifies the RMS software that the loudspeaker is connected. Simultaneously press the Reset and Service buttons to reset the RMS module and decommission the loudspeaker from the network (see “Resetting the RMS Module” on page 22).

Wink LED (Green)

The green Wink LED lights when a signal is sent from the RMS software by clicking the Wink button on the loudspeaker’s icon or on its Text view. This is useful for identifying the physical loudspeaker corresponding to a loudspeaker icon in the RMS software.

Reset Button

Pressing the Reset button causes the RMS module’s firmware to reboot; this will not affect whether the loudspeaker is commissioned (which is stored in flash memory). Simultaneously press the Reset and Service buttons to reset the RMS module and decommission the loudspeaker from the network (see “Resetting the RMS Module” on page 22).

Activity LED (Green)

The green Activity LED flashes continuously when the loudspeaker has been successfully commissioned.

Network Connectors

The two bi-directional Weidmuller locking connectors transfer data to and from the RMS network. Two connectors are provided to allow for easy connection of multiple (daisy-chained) loudspeakers on the network.

RESETTING THE RMS MODULE

Use the Reset and Service buttons to reset the RMS module, which will cause the module to be decommissioned from the network.

To reset the RMS module:

1. Press and hold the Service button for 10 seconds.
2. While continuing to hold down the Service button, press and hold the Reset button for 5 seconds.
3. After releasing the Reset button, continue holding down the Service button for 5 seconds. The RMS module is reset and the loudspeaker is decommissioned. The RMS module’s red Service LED blinks.

CHAPTER 6: SYSTEM DESIGN AND INTEGRATION TOOLS

This chapter introduces MAPP, Meyer Sound's patented system design tool and the Galileo GALAXY Network Platform.

MAPP SYSTEM DESIGN TOOL

The MAPP System Design Tool (Figure 30) is a powerful, cross-platform application for accurately predicting the coverage pattern, frequency response, phase response, impulse response, and SPL capability of individual or arrayed Meyer Sound loudspeakers.

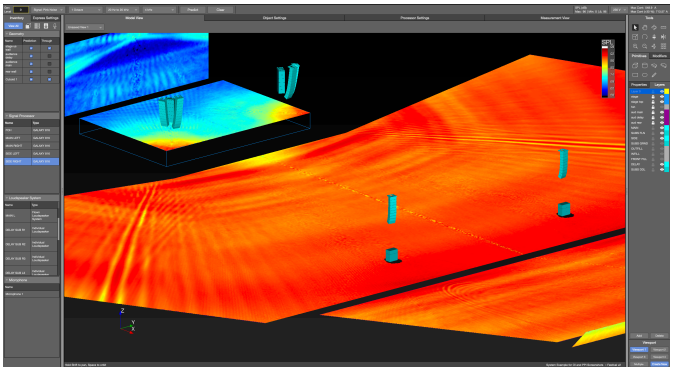

Figure 30: MAPP System Design Tool

Whether planning for fixed installations or for tours with multiple venues, use MAPP to accurately predict the appropriate loudspeaker deployment for each job, complete with coverage data, system delay and equalization settings, rigging information, and detailed design illustrations. MAPP's accurate, high-resolution predictions ensure that systems will perform as intended, thereby eliminating unexpected coverage problems and minimizing onsite adjustments.

The key to the accuracy of MAPP's predictions is Meyer Sound's exhaustive database of loudspeaker measurements. Performance predictions for each loudspeaker are based on 3-dimensional, 65,000+ 1/48th-octave-band measurements taken in the Meyer Sound anechoic chamber. The extraordinary consistency between Meyer Sound loudspeakers guarantees that predictions from MAPP will closely match their actual performance.

MAPP software allows for configuration of Meyer Sound loudspeaker systems and definition of the environment in which they operate, including air temperature, pressure, humidity, and the location of prediction surfaces. Importing both CAD (.DXF) and Sketchup (.SKP) files containing detailed venue information to act as an anchor model to the prediction surfaces and a visual aid to facilitate prediction data interpretation is also possible.

TIP: See meyersound.com for support and more information about MAPP.

MAPP Capabilities

With MAPP, the user can:

- Simulate different loudspeaker configurations to refine system designs and determine the best coverage for intended audience areas
- Model loudspeaker interactions to locate constructive and destructive interferences so that loudspeakers can be re-aimed and repositioned as necessary
- Place microphones anywhere in the Model View space and predict loudspeaker frequency response, phase response, and sound pressure levels at each microphone position
- Determine delay settings for fill loudspeakers using the Inverse Fast Fourier Transform and phase response feature
- Preview the results of signal processing to determine optimum settings for the best system response
- Automatically calculate load information for arrays to determine necessary minimum rigging capacity, front-to-back weight distribution, and center of gravity location
- Generate and export system images and system PDF reports for client presentations
- Synchronize GALAXY processor output channel settings in real time with virtual or real GALAXY units, allowing in-the-field changes to be predicted during system alignments.

GALILEO GALAXY NETWORK PLATFORM

The Galileo GALAXY Network Platform is a sophisticated loudspeaker management tool for controlling all Meyer Sound speaker types. The GALAXY loudspeaker processor extends a high level of audio control in driving and aligning loudspeaker systems with multiple zones. It provides a powerful tool set for corrective equalization (EQ) and creative fine-tuning for a full range of applications from touring to cinema.

Users can readily program the GALAXY processor using Compass software running on a host computer or via the Compass Go application for the iPad. Connecting MAPP to the GALAXY processor will also allow the user to push output channel settings created in MAPP as a starting point. Compass Control Software includes custom-designed settings for each family of speakers, as well as to integrate families together. For example, the Product Integration feature matches the phase characteristics between Meyer speaker families to ensure the most coherent summation.

Processing tools for inputs and outputs include delay, parametric EQ and U-Shaping EQ. Output processing also includes polarity reversal, Low-Mid Beam Control (LMBC), atmospheric correction, and All Pass filters.

The built-in summing and delay matrices allow a user to easily assign gain and delay values, respectively, at each cross point. This capability greatly facilitates using one loudspeaker to satisfy multiple purposes.

Front panel controls let a user intuitively and quickly operate a GALAXY processor without a computer during live use.

The GALAXY 408, GALAXY 816 and GALAXY 816-AES3 processor versions have the same audio processing capability with different I/O. See www.meyersound.com to locate their datasheets for more information.

APPENDIX A: THE VARIO HORN

ROTATING THE VARIO HORN

The UPJ-1P has a VariO horn that can be easily rotated to deliver either wide or narrow coverage, whether the loudspeaker is oriented vertically or horizontally. The VariO horn is factory installed with a wide coverage of 80° horizontal by 50° vertical (when the loudspeaker is oriented vertically). The horn can be rotated to provide a narrow, targeted coverage of 50° horizontal by 80° vertical (when the loudspeaker is oriented vertically).

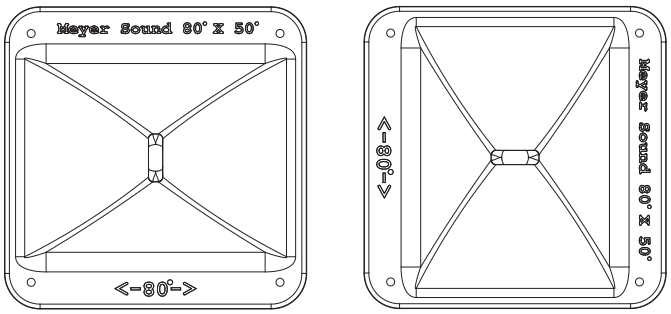

Figure 31: VariO Horn at 80° Horizontal by 50° Vertical (Left) and 50° Horizontal by 80° Vertical (Right)

To rotate the UPJ-1P's VariO horn from wide coverage to narrow coverage:

1. Remove the four 10-32 x 5/8-inch screws from the grille cover (two from the top and two from the bottom, Figure 32).
2. Carefully remove the grille cover.
3. Remove the four 10-32 x 1-inch flange screws from the horn.
4. Carefully remove the horn from the cabinet, making sure not to place any stress on its wiring.
5. Rotate the horn 90° clockwise, so its orientation is 80° horizontal by 50° vertical, with the horn's wide flange situated near the sides of the cabinet instead of the top and bottom.

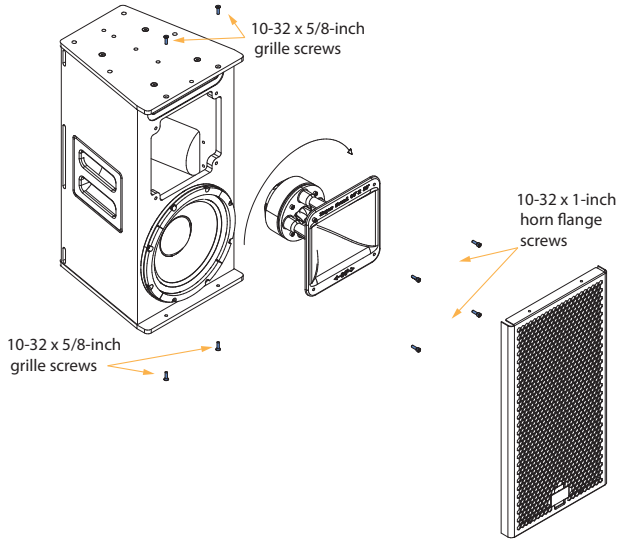

Figure 32: Rotating the Horn

6. Place the horn back in the cabinet (it should fit comfortably snug) and secure it with the four 10-32 x 1-inch flange screws.

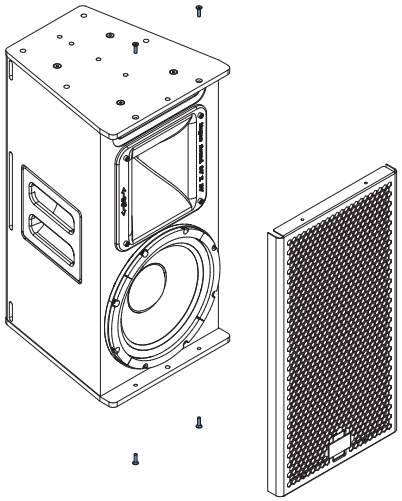

Figure 33: Reassembling the Grille after Rotating Horn

7. Reattach the grille cover and secure it with the four 10 32 x 5/8-inch screws.

TIP: To rotate the Meyer Sound logo on the UPJ-1P grille frame, pull up on the logo, rotate it to the desired position, and release.

APPENDIX B: INSTALLING THE OPTIONAL RAIN HOODS

The optional UPJ-1P rain hoods provide all-weather protection for its heat sink, user panel, and connectors in fixed, outdoor installations. The rain hood is available in both vertical (PN 40.134.020.01) and horizontal (PN 40.134.020.02) versions.

NOTE: When using rain hoods with UPJ-1P loudspeaker arrays, the maximum splay angle between loudspeakers is 40 degrees.

INSTALLING THE VERTICAL RAIN HOOD

To install the UPJ-1P vertical rain hood (Figure 34):

1. Attach any required cables to the UPJ-1P and orient the loudspeaker vertically.
2. If the rain hood's gasket material is not attached, firmly attach it to the rain hood's inner edges. Do not attach the gasket directly to the user panel.
3. Attach the rain hood by slipping it under the flange at the top of the loudspeaker and placing it flush against the user panel, aligning the rain hood's holes with those in the panel.

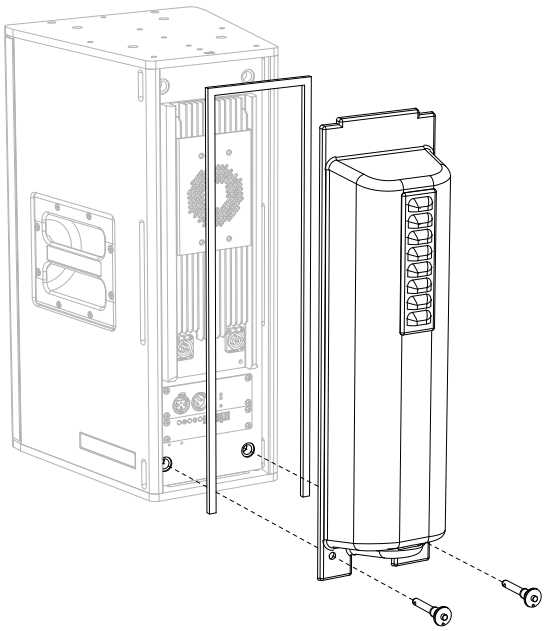

Figure 34: UPJ-1P Vertical Rain Hood

4. Secure the rain hood to the user panel by inserting the lock pins in the two bottom holes. Insert the pins all the way so they lock.

INSTALLING THE HORIZONTAL RAIN HOOD

To install the UPJ-1P horizontal rain hood (Figure 35):

1. Attach any required cables to the UPJ-1P and orient the loudspeaker horizontally.
2. If the rain hood's gasket material is not attached, firmly attach it to the rain hood's inner edges. Do not attach the gasket directly to the user panel.
3. Attach the rain hood by slipping it under the flange at the top of the loudspeaker and placing it flush against the user panel, aligning the rain hood's holes with those in the panel.

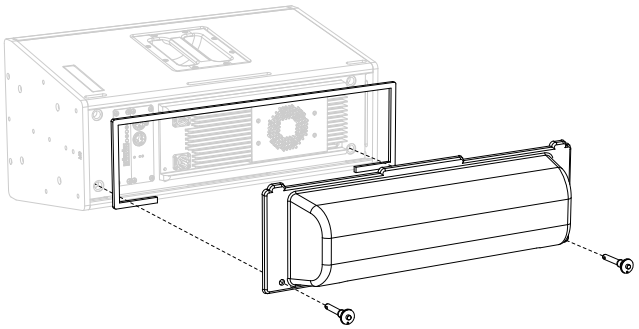

Figure 35: UPJ-1P Horizontal Rain Hood

4. Secure the rain hood to the user panel by inserting the lock pins in the two bottom holes. Insert the pins all the way so they lock.

APPENDIX C: UPJ-1P SPECIFICATIONS

ACOUSTICAL, ELECTRICAL, PHYSICAL, AND ENVIRONMENT SPECIFICATIONS

ACOUSTICAL	
Operating Frequency Range	55 Hz – 20 kHz **Note:** Recommended maximum operating frequency range. Response depends on loading conditions and room acoustics.
Frequency Response	66 Hz – 18 kHz ±4 dB **Note:** Free field, measured with 1/3 octave frequency resolution at 4 meters.
Phase Response	750 Hz to 18 kHz ±45°
Linear Peak SPL	**125 dB with 18 dB crest factor (M-noise)**; 122.5 dB (Pink noise), 125 dB (B-noise) **Note:** Linear Peak SPL is measured in free-field at 4 m referred to 1 m. Loudspeaker SPL compression measured with M-noise at the onset of limiting, 2-hour duration, and 50 °C ambient temperature is < 2 dB. **M-noise** is a full bandwidth (10 Hz–22.5 kHz) test signal developed by Meyer Sound to better measure the loudspeaker's music performance. It has a constant instantaneous peak level in octave bands, a crest factor that increases with frequency, and a full bandwidth Peak to RMS ratio of 18 dB. **Pink noise** is a full bandwidth test signal with Peak to RMS ratio of 12.5 dB. **B-noise** is a Meyer Sound test signal used to ensure measurements reflect system behavior when reproducing the most common input spectrum, and to verify there is still headroom over pink noise.
Coverage	80° x 50° **Note:** The UPJ-1P horn can be rotated to provide an 80° x 50° coverage pattern in either the horizontal or vertical plane.
TRANSDUCERS	
Low Frequency	One 10-inch cone driver with neodymium magnet; 4 Ω nominal impedance
High Frequency	One 3-inch compression driver; 16 Ω nominal impedance **Note:** High frequency driver is coupled to an 80° x 50° constant-directivity rotatable horn.
AUDIO INPUT	
Type	Differential, electronically balanced
Maximum Common Mode Range	±15 V DC, clamped to earth for voltage transient protection
Connectors	Female 3-pin XLR input with male 3-pin XLR loop output; optional 5-pin XLR connectors accommodate both balanced audio and RMS signals
Input Impedance	10 kΩ differential between pins 2 and 3
Wiring	Pin 1: Chassis/earth through 220 kΩ, 1000 pF, 15 V clamp network to provide virtual ground lift at audio frequencies Pin 2: Signal + Pin 3: Signal – (optional polarity reversal switch) Case: Earth ground and chassis **Note:** An optional input module is available that includes a polarity reversal switch and attenuator (0–18 dB).
Nominal Input Sensitivity	0 dBV (1.0 V rms) continuous average is typically the onset of limiting for noise and music
Input Level	Audio source must be capable of producing +20 dBV (10 V rms) into 600 Ω to produce maximum peak SPL over the operating bandwidth of the loudspeaker

AMPLIFIER	
Type	Two-channel complementary MOSFET output stages (class AB/bridged)
Total Output Power	550 W peak **Note:** Wattage rating based on the maximum unclipped burst sine-wave rms voltage the amplifier will produce into the nominal load impedance.
THD, IM TIM	<.02%
Cooling	Forced air cooling over amplifier heat sink
AC POWER	
Connectors	PowerCON 20 with looping output
Automatic Voltage Selection	90–264 V AC; 50–60 Hz
Safety Agency Rated Operating Voltage	100–240 V AC; 50–60 Hz
Turn On/Turn Off Points	90 V AC turn-on, no turn-off; internal fuse-protection above 265 V AC **Note:** No automatic turn-off voltages. Voltages above 265 V AC are fuse protected but may cause permanent damage to the power supply. Voltages below 90 V AC may result in intermittent operation.
Current Draw	
Idle Current	0.41 A rms (115 V AC); 0.33 A rms (230 V AC); 0.42 A rms (100 V AC)
Maximum Long-Term Continuous Current	3.2 A rms (115 V AC); 1.6 A rms (230 V AC); 3.7 A rms (100 V AC)
Burst Current	5.0 A rms (115 V AC); 2.5 A rms (230 V AC); 5.8 A rms (100 V AC)
Maximum Instantaneous Peak Current	17.0 A peak (115 V AC); 8.5 A peak (230 V AC); 20.0 A peak (100 V AC)
Inrush Current	15.0 A peak (115 V AC); 13.0 A peak (230 V AC); 15.0 A peak (100 V AC)
Note: Current draw values for a single loudspeaker. Loop output not used.	
RMS NETWORK (OPTIONAL)	
	Two-conductor twisted-pair network that reports all operating parameters of amplifiers to system operator's host computer
PHYSICAL	
Enclosure	Premium birch plywood
Finish	Slightly textured black
Protective Grille	Powder-coated, hex-stamped steel with black mesh
Rigging	Aluminum end plates for mounting/flying cabinets with QuickFly and standard rigging options; metric M8 threaded points are used in all UPJ-1P rigging hardware.
Dimensions	W: 11.15 in (283 mm) x H: 22.47 in (571 mm) x D: 12.23 in (311 mm)
Weight	46 lb (20.87 kg)

ENVIRONMENTAL	
Operating Temperature	0° C to +45° C
Non Operating Temperature	–40° C to +75° C
Humidity	To 95% at 35° C
Operating Altitude	To 4600 m (15,000 ft)
Non operating Altitude	To 6300 m (25,000 ft)
Shock	30 g 11 msec half-sine on each of 6 sides
Vibration	10 Hz – 55 Hz (0.010 peak-to-peak excursion)
IP Rating	IP44 for weather-protected version with properly installed rain hood (see “Installing the Optional Rain Hoods” on page 27).

UPJ-1P COMPLIANCE





UPJ-1P DIMENSIONS

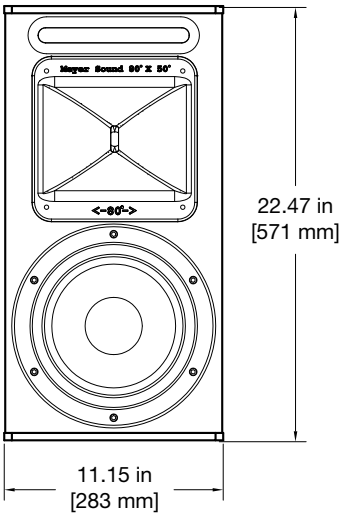

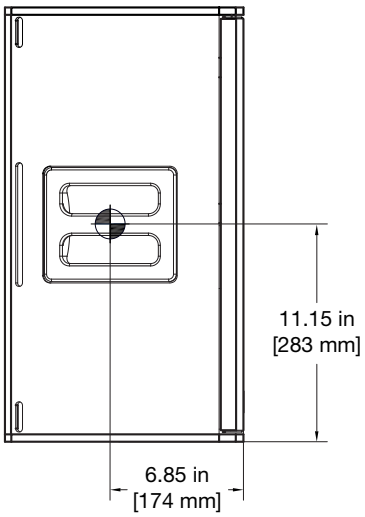

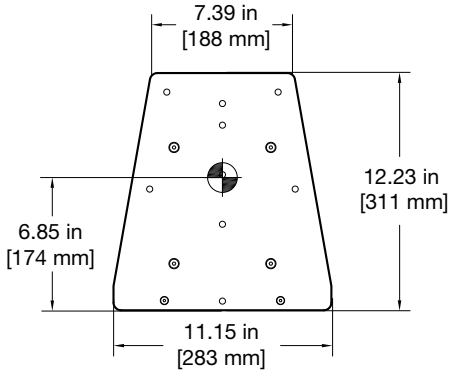

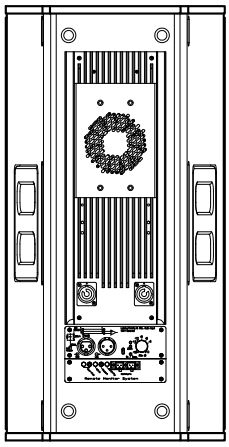

MUB-UPJ DIMENSIONS

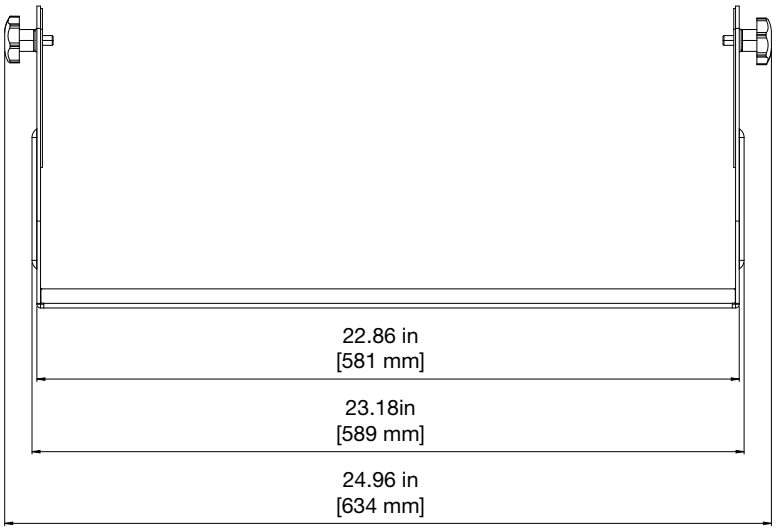

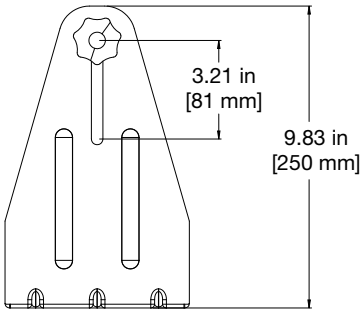

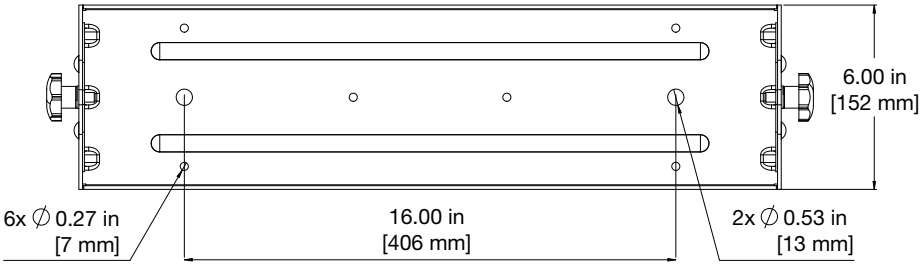

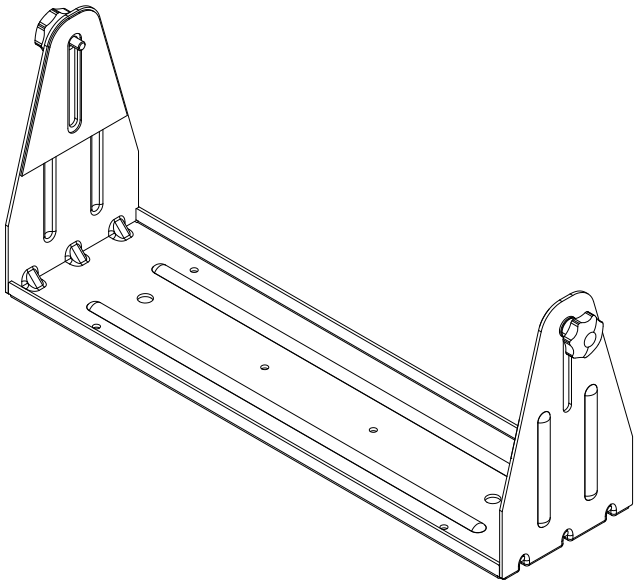

MYA-UPJ DIMENSIONS

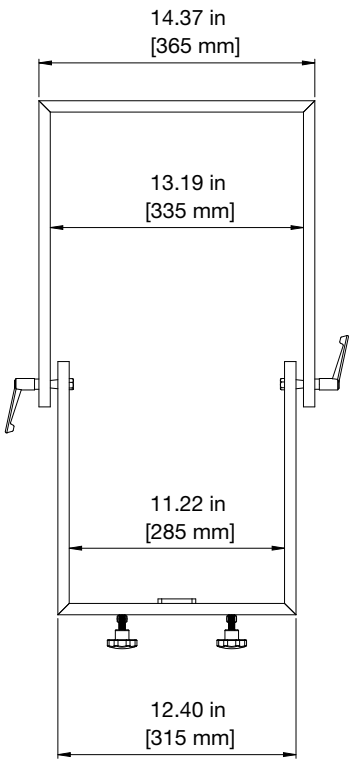

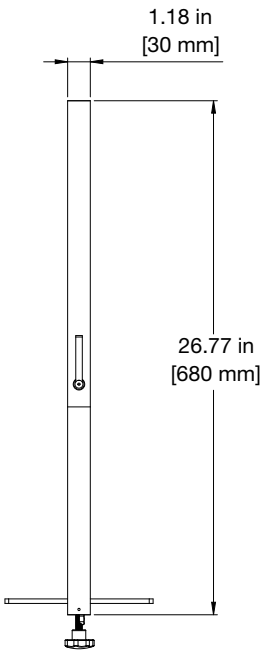

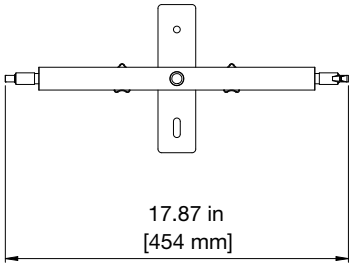

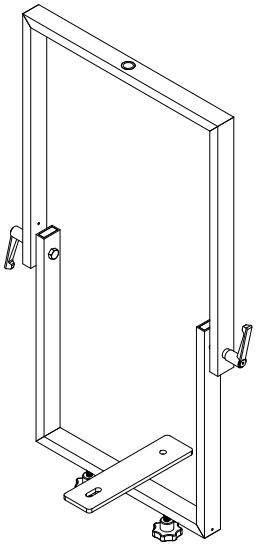

Meyer Sound Laboratories, Incorporated.
2832 San Pablo Avenue
Berkeley, CA 94702

meyersound.com
T: +1 510 486.1166

© 2003–2021
Meyer Sound Laboratories, Incorporated. All rights reserved
UPJ-1P Operating Instructions PN 05.134.400.01 C