Stella-4 Constellation Installation Loudspeaker
Stella-4C Constellation Installation Ceiling-Mount Loudspeaker
Stella-8C Constellation Installation Ceiling-Mount Loudspeaker
Stella-188 Power Supply

thinking sound Meyer® Sound



Keep these important operating instructions.
Check www.meyersound.com for updates.

© 2011, 2015
Meyer Sound. All rights reserved.
Stella Operating Instructions, PN 05.161.005.01 B3

The contents of this manual are furnished for informational purposes only, are subject to change without notice, and should not be construed as a commitment by Meyer Sound Laboratories Inc. Meyer Sound assumes no responsibility or liability for any errors or inaccuracies that may appear in this manual. Except as permitted by applicable copyright law, no part of this publication may be reproduced, stored in a retrieval system, or transmitted, in any form or by any means, electronic, mechanical, recording or otherwise, without prior written permission from Meyer Sound.

Stella and all alpha-numeric designations for Meyer Sound products and accessories are trademarks of Meyer Sound. Constellation, Meyer Sound, and the Meyer Sound wave logo are registered trademarks of Meyer Sound Laboratories Inc. (Reg. U.S. Pat. & Tm. Off.). All third-party trademarks mentioned herein are the property of their respective trademark holders.

FEDERAL COMMUNICATIONS COMMISSION (FCC) STATEMENT

This equipment has been tested and found to comply with the limits for a Class A digital device, pursuant to part 15 of the FCC Rules. These limits are designed to provide reasonable protection against harmful interference when the equipment is operated in a commercial environment. This equipment generates, uses, and can radiate radio frequency energy and, if not installed and used in accordance with the instruction manual, may cause harmful interference to radio communications. Operation of this equipment in a residential area is likely to cause harmful interference in which case the user will be required to correct the interference at their own expense.

This device complies with Part 15 of the FCC rules. Operation is subject to the following two conditions: (1) this device may not cause harmful interference, and (2) this device must accept any interference received, including interference that may cause undesired operation.

INDUSTRY CANADA COMPLIANCE STATEMENT

This Class A digital apparatus complies with Canadian ICES-003.

AVIS DE CONFORMITÉ À LA RÉGLEMENTATION D'INDUSTRIE CANADA

Cet appareil numérique de la classe A est conforme à la norme NMB-003 du Canada.

EN 55032 (CISPR 32) STATEMENT

Warning: This equipment is compliant with Class A of CISPR 32. In a residential environment this equipment may cause radio interference.

CONTENTS

Chapter 1: Introduction 7

How to Use this Manual 7
Stella Loudspeakers 7
Stella Installation Loudspeaker 7
Stella-4C Installation Loudspeaker 8
Stella-8C Installation Loudspeaker 8
Stella-188 Power Supply 8

Chapter 2: Connecting Stella Loudspeakers 9

Stella Connector 9
Wiring Stella Loudspeaker Cables with Belden 1502 Cable (or Equivalent) 9
Stella-188 Power Supply 10
Stella-188 Front Panel 10
Stella-188 Rear Panel 10
Connecting Stella Loudspeakers to the Stella-188 14

Chapter 3: Stella Mounting Options 17

Important Safety Considerations 17
Using a Safety Cable with the Stella-4 17
Mounting the Stella-4 17
Mounting the Stella-4 with the MMB Bracket 18
Mounting the Stella-4 with the MMB Bracket and OmniMount 20.5 ST 18
Mounting the Stella-4 with the MAMB Adjustable Bracket 18
Mounting the Stella-4C 19
Installing the Stella-4C in a Backbox 19
Mounting the Stella-8C 20
Installing the Stella-8C in a Backbox 20

Appendix A: Stella Specifications 21

CHAPTER 1: INTRODUCTION

HOW TO USE THIS MANUAL

Make sure to read these operating instructions in their entirety before configuring a system with Stella™ loudspeakers. In particular, pay close attention to material related to safety issues.

As you read these operating instructions, you will encounter the following icons for notes, tips, and cautions:

NOTE: A note identifies an important or useful piece of information relating to the topic under discussion.

TIP: A tip offers a helpful tip relevant to the topic at hand.

CAUTION: A caution gives notice that an action may have serious consequences and could cause harm to equipment or personnel, and could cause delays or other problems.

Information and specifications are subject to change. Updates and supplementary information are available at www.meyersound.com.

Meyer Sound Technical Support is available at:

- **Tel:** +1 510 486.1166
- **Tel:** +1 510 486.0657 (after hours support)
- **Web:** www.meyersound.com/support
- **Email:** techsupport@meyersound.com

STELLA LOUDSPEAKERS

The Stella family of loudspeakers was engineered primarily for use in Meyer Sound's Constellation® electroacoustic architecture. The compact, self-powered loudspeakers are ideally suited for applications requiring exceptional audio performance, uniform directional control, low-profile mounting solutions, and remote power supplies.

Stella loudspeakers include onboard amplification and processing and exhibit the same high intelligibility, low distortion, and flat frequency and phase responses as other Meyer Sound loudspeakers.

Stella Installation Loudspeaker

The Stella-4 installation loudspeaker is comprised of a 4-inch cone transducer housed in a compact aluminum die cast enclosure. It delivers an impressive frequency range of 100 Hz to 18 kHz and a maximum peak SPL of 108 dB at 1 meter.



Stella-4 Loudspeaker Mounted with MAMB Adjustable Bracket

The Stella-4 can be easily mounted on ceilings or walls with mounting accessories available from Meyer Sound and third-party manufacturers.

Stella-4C Installation Loudspeaker

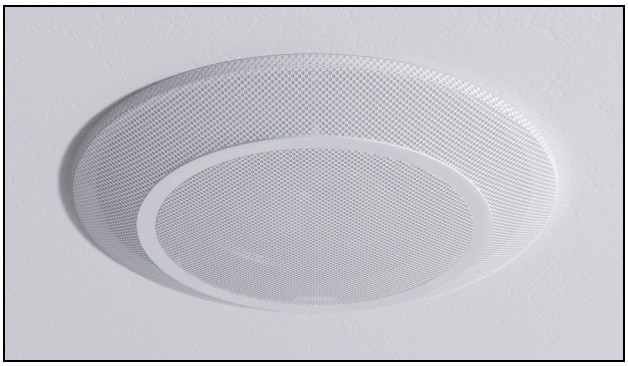

Stella-4C Ceiling Mount Installation Loudspeaker

The Stella-4C ceiling mount installation loudspeaker offers the same sonic capabilities as the Stella-4 in a package specifically designed for flushmount ceiling and wall applications, where it can be mounted in standard backboxes for 8-inch drivers (with a minimum depth of 6.5 inches). The Stella-4C is housed in an aluminum die cast enclosure with a rear heat sink.

Stella-8C Installation Loudspeaker

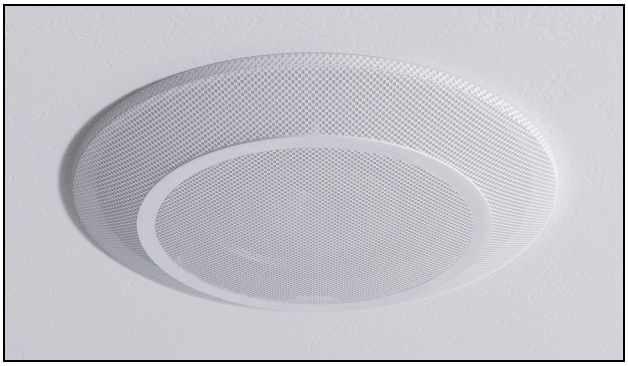

Stella-8C Ceiling Mount Installation Loudspeaker

The Stella-8C ceiling mount installation loudspeaker delivers similar acoustical performance as the Stella-4 and Stella-4C but with expanded output capability and wider coverage. The unit's 8-inch coaxial cone and 0.75-inch tweeter transducers produce a maximum peak SPL of 117 dB at 1 meter over a wide frequency range of 100 Hz to 18 kHz. Housed in an aluminum, die cast enclosure with a rear heat sink, the Stella-8C can be flush-mounted in ceilings and walls with standard backboxes for 8-inch drivers (with a minimum depth of 6.5 inches).

Stella-188 Power Supply



Stella-188 Power Supply

The required method of delivering DC power and balanced audio to Stella loudspeakers is with the Stella-188 power supply. The single-space rack unit can power up to 16 Stella-4 or Stella-4C loudspeakers, or up to eight Stella-8C loudspeakers. The Stella-188 receives eight channels of balanced audio from its 25-pin D-sub connector and outputs the audio, along with 18 V of DC power, to its five-pin Phoenix connectors. Each Channel Output can drive up to two Stella-4/Stella-4C loudspeakers (or one Stella-8C loudspeaker). The Stella-188 front panel has LEDs for monitoring voltage output and connectivity to the Stella loudspeakers.

Stella loudspeakers receive balanced audio and DC power from a five-pin Phoenix-style connector on their rear panel. Meyer Sound's patented Iso-Input™ transformer-isolated differential inputs yield a high common-mode signal rejection ratio (CMRR). Because Stella loudspeakers have been optimized to tolerate voltage drops of up to 30 percent, they can accommodate light-gauge cables and long cable runs.

CHAPTER 2: CONNECTING STELLA LOUDSPEAKERS

STELLA CONNECTOR

Stella loudspeakers receive DC power and balanced audio from a five-pin Phoenix connector on their rear panel. The connector's five pins include two for DC power (negative and positive) and three for balanced audio (shield, negative, and positive). These pins are clearly labeled on the Stella rear panel. The connector accepts conductors up to 12 AWG (American Wire Gauge) or 2.5 mm^2. To function properly, Stella loudspeakers require DC power in the range of 12–18 V DC.



Stella Connector

A single composite cable (such as Belden 1502R) wired for both DC power and balanced audio can connect each Stella loudspeakers to one of the Stella-188's eight Channel Outputs.

Each Stella loudspeaker comes with one Phoenix cable connector for making loudspeaker cables. For information on cable requirements, see "Cable Lengths and Cable Gauges for Stella Loudspeakers" on page 14.

CAUTION: Do not connect Stella loudspeakers to voltages above 18 V DC. Receiving voltages above 18 V DC will permanently damage Stella loudspeakers.

CAUTION: For installations comprising both Stella loudspeakers and 48 V DC loudspeakers, make sure that Stella loudspeakers are *only* connected to a Stella-188 power supply. Connecting Stella loudspeakers to a 48 V DC power supply will permanently damage the Stella loudspeakers.

CAUTION: When wiring Stella loudspeaker cables, make sure each pin in the connector is wired correctly to avoid damage to the loudspeaker and polarity reversal, which can affect system performance.

Wiring Stella Loudspeaker Cables with Belden 1502 Cable (or Equivalent)

The most convenient method of wiring Stella loudspeaker cables is with a multiconductor cable such as Belden 1502, which has dedicated conductors for DC power and balanced audio in a single jacket. When wiring Stella loudspeaker cables with Belden 1502, use the conventions in Table 1. The red and black wires are 18 AWG, thicker than the other three wires, and should be used for DC power (for maximum cable lengths, see "Cable Lengths and Cable Gauges for Stella Loudspeakers" on page 14). The blue, white, and shield drain wires are shielded together and should be used for audio.

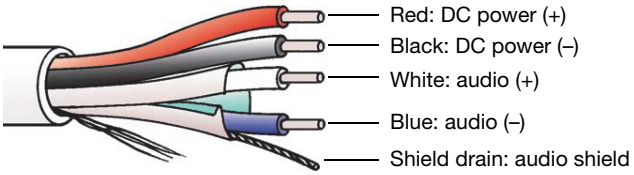

Belden 1502 Composite Cable

Table 1: Wiring Stella Loudspeaker Cables with Belden 1502R

Wire	Signal	Gauge
Red	DC power, positive (+)	18 AWG
Black	DC power, negative (–)	18 AWG
White	Balanced audio, positive (+)	22 AWG
Blue	Balanced audio, negative (–)	22 AWG
Shield drain	Balanced audio, shield	24 AWG

CAUTION: When wiring Stella loudspeaker cables, it is extremely important that each pin be wired correctly. Make sure the DC from the external power supply is wired directly (and only) to the DC pins on the Stella loudspeaker connector, and that the polarity is observed (negative to negative, positive to positive) to avoid damage to the loudspeaker. In addition, make sure that audio pins are wired correctly; polarity reversals for audio signals affect system performance.

STELLA-188 POWER SUPPLY

The Stella-188 was designed to deliver eight channels of balanced audio and DC power to up to 16 Stella-4/Stella-4C loudspeakers (or to up to eight Stella-8C loudspeakers). The Stella-188 is a switched-mode, regulated power supply that occupies one space in a standard 19-inch rack.

Stella-188 Front Panel

The Stella-188 front panel includes a power switch, LEDs for monitoring each of the eight loudspeaker channels, and a fuse for each channel.



Stella-188 Power Supply Front Panel

AC Power

The Stella-188 is powered on and off with the AC Power switch.

Voltage and Load Current LEDs (1–8)

The Voltage and Load Current LEDs are useful for verifying whether each of the eight Channel Outputs have voltage and whether their connected loudspeakers are receiving DC power and audio.

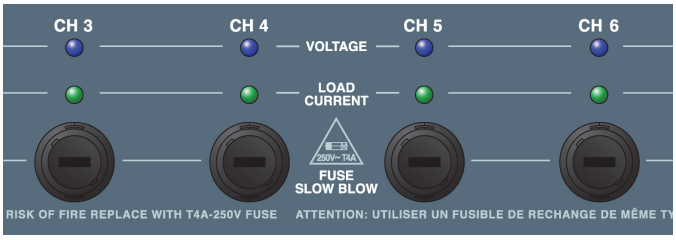

Stella-188 Channel LEDs and Fuses

Voltage LEDs (1–8)

The blue Voltage LEDs indicate whether voltage is present for each of the eight loudspeaker channels. These LEDs should be lit when the Stella-188 is powered on. If a channel is not lit, its fuse may need to be replaced. If a group of four Voltage LEDs is not lit (either 1–4 or 5–9), one of the Stella-188's two internal power supplies may have failed.

Load Current LEDs (1–8)

The green Load Current LEDs indicate whether a loudspeaker is connected to the channel and receiving power. As a channel's audio signal increases, its LED becomes brighter. If an LED is not lit, check that the channel's Voltage LED is lit (the fuse is working) and verify the cable connection to the loudspeaker.

Fuse Slow Blow (1–8)

Each loudspeaker channel is protected by its own fuse. A maximum of two Stella-4/Stella-4C loudspeakers (or one Stella-8C loudspeaker) can be connected per channel; connecting more than that could cause the fuse to blow. When replacing a fuse, make sure to use a 4-amp, 250-volt slow-blow fuse (T4A-250V). These fuses are available from Meyer Sound (PN 420.022).

Stella-188 Rear Panel

The Stella-188 rear panel includes an AC connector, an Audio Input connector for receiving up to eight channels of source audio, and eight Channel Output connectors that can deliver DC power and balanced audio to up to 16 Stella-4/Stella-4C loudspeakers (or to up to eight Stella-8C loudspeakers).



Stella-188 Power Supply Back Panel

AC Input

The Stella-188 has an international standard IEC-320 AC inlet (line, neutral/line, earth). The inlet can accept different power cord types for outlets used throughout the world. Make sure to use the correct power cord for the AC power in your area. The Stella-188 operates at an AC voltage range of 100–240 V at 50–60 Hz.

Stella-188 Current Draw

The current draw for the Stella-188 is dynamic and fluctuates as operating levels change for the connected loudspeakers. Since different cables and circuit breakers heat up at varying rates, it is important to understand the following types of current ratings and how they affect circuit breaker and cable specifications.

- **Idle Current** — The maximum rms current during idle periods.
- **Maximum Long-Term Continuous Current** — The maximum rms current during a period of at least 10 seconds. The Maximum Long-Term Continuous Current is used to calculate temperature increases for cables, to ensure that cable sizes and gauges conform to electrical code standards. It is also used as a rating for slow-reacting thermal breakers.
- **Burst Current** — The maximum rms current during a period of around one second. The Burst Current is used as a rating for magnetic breakers. It is also used for calculating the peak voltage drop in long AC cable runs, according to the following formula:

  V pk (drop) = I pk x R (cable total)
- **Ultimate Short-Term Peak Current** — A rating for fast-reacting magnetic breakers.
- **Inrush Current** — The spike of initial current encountered when powering on.

You can use the following tables as a guide for selecting circuit breaker ratings for the system's operating voltage.

Current Draw for Stella-188 with Eight Stella-4s/Stella-4Cs

Current Draw (Eight Stella-4s)	115 V AC	230 V AC	100 V AC
Idle Current	0.583 A rms	0.550 A rms	0.659 A rms
Maximum Long-Term Continuous Current	2.20 A rms	1.20 A rms	2.50 A rms
Burst Current	2.40 A rms	1.40 A rms	2.80 A rms
Ultimate Short-Term Current	6.80 A peak	3.50 A peak	7.60 A peak
Inrush Current	17.2 A peak	17.0 A peak	18.4 A peak

Current Draw for Stella-188 with 16 Stella-4s/Stella-4Cs

Current Draw (16 Stella-4s)	115 V AC	230 V AC	100 V AC
Idle Current	0.943 A rms	0.751 A rms	1.078 A rms
Maximum Long-Term Continuous Current	4.50 A rms	2.15 A rms	5.50 A rms
Burst Current	5.20 A rms	3.0 0A rms	6.70 A rms
Ultimate Short-Term Current	13.0 A peak	9.0 A peak	15.0 A peak
Inrush Current	17.2 A peak	17.0 A peak	18.4 A peak

Current Draw for Stella-188 with Eight Stella-8Cs

Current Draw (Eight Stella-8Cs)	115 V AC	230 V AC	100 V AC
Idle Current	0.943 A rms	0.751 A rms	1.078 A rms
Maximum Long-Term Continuous Current	4.50 A rms	2.15 A rms	5.50 A rms
Burst Current	5.20 A rms	3.00 A rms	6.70 A rms
Ultimate Short-Term Current	13.0 A peak	9.0 A peak	15.0 A peak
Inrush Current	17.2 A peak	17.0 A peak	18.4 A peak

The minimum electrical service amperage required by the Stella-188 is the sum of the Maximum Long-Term Continuous Current for all loudspeakers connected to the Stella-188. An additional 30 percent above the minimum amperage is recommended to prevent peak voltage drops at the service entry.

NOTE: For best performance, the AC cable voltage drop should not exceed 10 V, or 10 percent at 115 V and 5 percent at 230 V. Make sure that even with AC voltage drops that the AC voltage always remains within the operating window.

Safety Issues

Pay close attention to these important electrical and safety issues.

- The Stella-188 requires a grounded outlet.

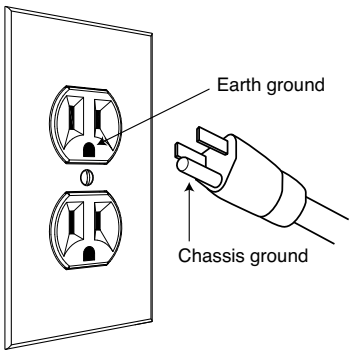

- Do not use a ground-lifting adapter or cut the AC cable ground pin.

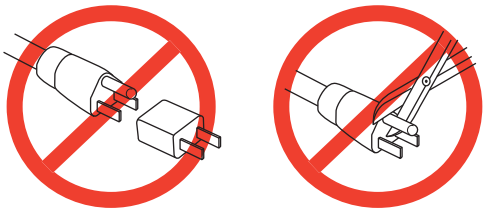

- Keep all liquids away from the Stella-188 to avoid hazards from electrical shock.
- Do not operate the unit if the power cables are frayed or broken.

Audio Input

Up to eight channels of balanced audio are received via the Stella-188's Audio Input connector. Each of the eight audio channels is hard-wired to the corresponding Stella-188 Channel Outputs, thereby allowing for easy distribution of discrete audio channels for Constellation installations.



Stella-188 Audio Input

The Audio Input connector requires either a 25-pin D-sub to 8-channel audio snake, or 25-pin D-sub to D-sub cable for connecting directly to audio processors.

Meyer Sound manufactures the following cables that can be used with the Stella-188 Audio Input connector (for more information, contact Meyer Sound).

- D-sub male to D-sub male cable, 0.5 meters (PN 28.167.012.01)
- D-sub male to D-sub male cable, 1 meter (PN 28.167.012.02)
- D-sub male to D-sub male cable, 2 meters (PN 28.167.012.03)
- D-sub male to XLR female cable, 10 feet (PN 28.139.009.01)

You can also make your own audio cables for connecting to the Stella-188. The Audio Input connector uses the following Tascam DA-88 wiring scheme.

Table 2: Pin Outputs for Stella-188 Audio Input Connector

Channel Number	XLR Pin 1 (Chassis)	XLR Pin 2 (Hot)	XLR Pin 3 (Cold)
1	D-sub 25	D-sub 24	D-sub 12
2	D-sub 11	D-sub 10	D-sub 23
3	D-sub 22	D-sub 21	D-sub 9
4	D-sub 8	D-sub 7	D-sub 20
5	D-sub 19	D-sub 18	D-sub 6
6	D-sub 5	D-sub 4	D-sub 17
7	D-sub 16	D-sub 15	D-sub 3
8	D-sub 2	D-sub 1	D-sub 14

Channel Outputs (1–8)

The eight Channel Outputs deliver DC power (18 V DC) and balanced audio to up to eight loudspeaker channels. Each Channel Output can drive up to two Stella-4/Stella-4C loudspeakers (or one Stella-8C loudspeaker). The Channel Outputs use five-pin Phoenix connectors with three pins for balanced audio (positive, negative, and shield) and two for DC Power (positive and negative). These pins are clearly labeled on the Stella-188 back panel.

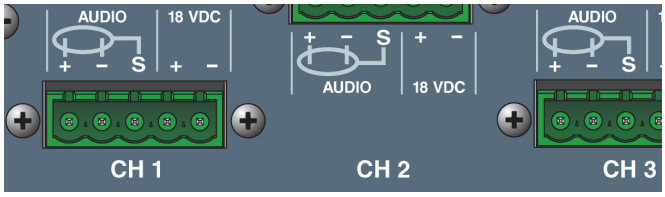

Stella-188 Channel Outputs

A single composite cable (such as the Belden 1502R) wired for both DC power and balanced audio can be used to connect to loudspeakers. Each Stella-188 comes with Phoenix cable connectors for creating Stella loudspeaker cables. For information on cable requirements, see “Cable Lengths and Cable Gauges for Stella Loudspeakers” on page 14.

CAUTION: When wiring cable connections for the Stella-188 Channel Outputs, make sure each pin in the connector is wired correctly to avoid damage to the loudspeaker and polarity reversal, which can affect system performance.

Number of Stella Loudspeakers per Stella-188 Channel Output

Each Stella-188 Channel Output can drive the following Stella loudspeaker configurations:

- One or two Stella-4 loudspeakers
- One or two Stella-4C loudspeakers
- One Stella-4 loudspeaker and one Stella-4C loudspeaker
- One Stella-8C loudspeaker

TIP: To connect two Stella-4s or two Stella-4Cs to a single Stella-188 Channel Output, daisy-chain the cable of the first Stella loudspeaker to the second. Wire the cable connector plugged into the first Stella with both the cable connected to the Stella-188 and the cable connected to the second Stella (see Figure 2 on page 15).

Current Draw for Stella-4 and Stella-4C Loudspeakers

The Stella-4 and Stella-4C draw a maximum current of 1.5 A rms and 3.3 A peak. Their current draw is dynamic and fluctuates as volume levels change. The cabling between the Stella loudspeakers and the Stella-188 adds resistance and hence causes a voltage drop at the loudspeakers. Because lower voltages compromise peak SPL, and in some cases frequency response, cable resistance should be minimized.

NOTE: When connecting a single Stella-4 or Stella-4C to a Stella-188 Channel Output, the total cable resistance should not exceed 4 ohms. When connecting two Stella-4s or two Stella-4Cs to a Stella-188 Channel Output, the total cable resistance should not exceed 2 ohms.

Current Draw for Stella-8C Loudspeakers

The Stella-8C draws a maximum current of 3.1 A rms and 6.3 A peak. Its current draw is dynamic and fluctuates as volume levels change. The cabling between the Stella-8C Stella-188 adds resistance and hence causes a voltage drop at the loudspeaker. Because lower voltages compromise peak SPL, and in some cases frequency response, cable resistance should be minimized.

NOTE: When connecting the Stella-8C to a Stella-188 Channel Output, the total cable resistance should not exceed 2 ohms.

Cable Lengths and Cable Gauges for Stella Loudspeakers

When connecting a single Stella-4 or Stella-4C to a Stella-188 Channel Output, you can use cable lengths up to 300 feet with only 1 dB of peak SPL loss with 18 AWG wire. When connecting two Stella-4s or Stella-4Cs (or one Stella-8C), equivalent lengths are possible with heavier wire gauges (see Table 3 and Table 4).

Table 3: Stella Loudspeaker Cable Lengths (AWG)

Cable Gauge	Cable Resistance (Ω/ft)	Approximate Maximum Cable Length		
		1 Stella-4 / Stella-4C per Chan.	2 Stella-4s / Stella-4Cs per Chan.	1 Stella-8C per Chan.
12 AWG	0.0016	1200 ft	600 ft	600 ft
14 AWG	0.00253	750 ft	375 ft	375 ft
16 AWG	0.00402	475 ft	237 ft	237 ft
18 AWG	0.00636	300 ft	150 ft	150 ft
20 AWG	0.01008	175 ft	87 ft	87 ft

Table 4: Stella Loudspeaker Cable Lengths (European)

Cable Gauge	Cable Resistance (Ω/m)	Approximate Maximum Length		
		1 Stella-4 / Stella-4C per Chan.	2 Stella-4s / Stella-4Cs per Chan.	1 Stella-8C per Chan.
2.50 mm^2	0.0052	365 m	157 m	157 m
1.50 mm^2	0.01076	175 m	87 m	87 m
1.00 mm^2	0.02087	90 m	45 m	45 m
0.75 mm^2	0.03307	55 m	27 m	27 m

The maximum cable length for a single Stella-4 or Stella-4C can be calculated with the following formula:

maximum length = 4 ohms / 2 * cable resistance

For example, the maximum length for 18 AWG cable with a resistance of 0.00636 ohms/ft is 314.4 feet (4 / 2 * 0.00636). If you are using two Stella-4s or two Stella-4Cs (or one Stella-8C), the distance is reduced by half to 157.2 feet, since the maximum cable resistance for two Stella-4s/ Stella-4Cs (or one Stella-8C) is 2 ohms.

NOTE: For long cable runs, you can use large cable gauges for most of the run and then terminate with the appropriate gauge (see Table 3 and Table 4) at the connector.

CONNECTING STELLA LOUDSPEAKERS TO THE STELLA-188

To connect Stella loudspeakers to the Stella-188:

1. Power off the Stella-188.
2. Attach a 25-pin D-sub audio cable or snake to the Stella-188 Audio Input connector. This cable should use the Tascam DA-88 wiring scheme (see Table 2 on page 12).



3. Connect audio sources (from a mixer or processor) to the other end of the audio cable or snake.
4. Connect Stella loudspeakers to the Stella-188 Channel Outputs. Use composite cables (such as Belden 1502R) wired for both DC power and balanced audio outfitted with five-pin Phoenix connectors.

- Connect up to 16 Stella-4s or Stella-4Cs to the Stella-188.
- Connect up to eight Stella-8Cs to the Stella-188.

NOTE: For maximum cable lengths for the Stella loudspeakers, refer to Table 3 on page 14 and Table 4 on page 14.

5. Enable output from the audio sources (from a mixer or processor) connected to the Stella-188.
6. Power on the Stella-188 and monitor the LEDs on its front panel to verify connections.

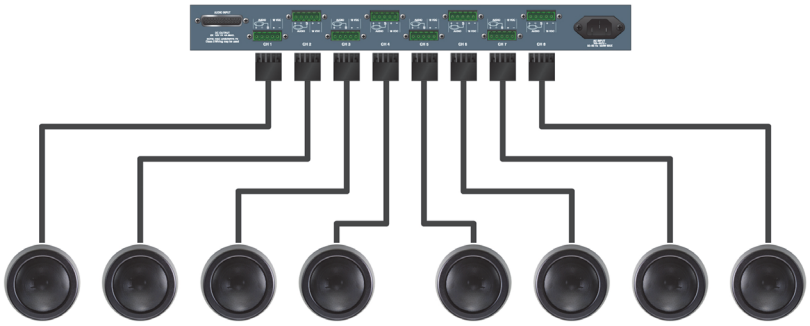

Figure 1: Stella-188 with Eight Stella-4s (One Unit Connected to Each Channel Output)

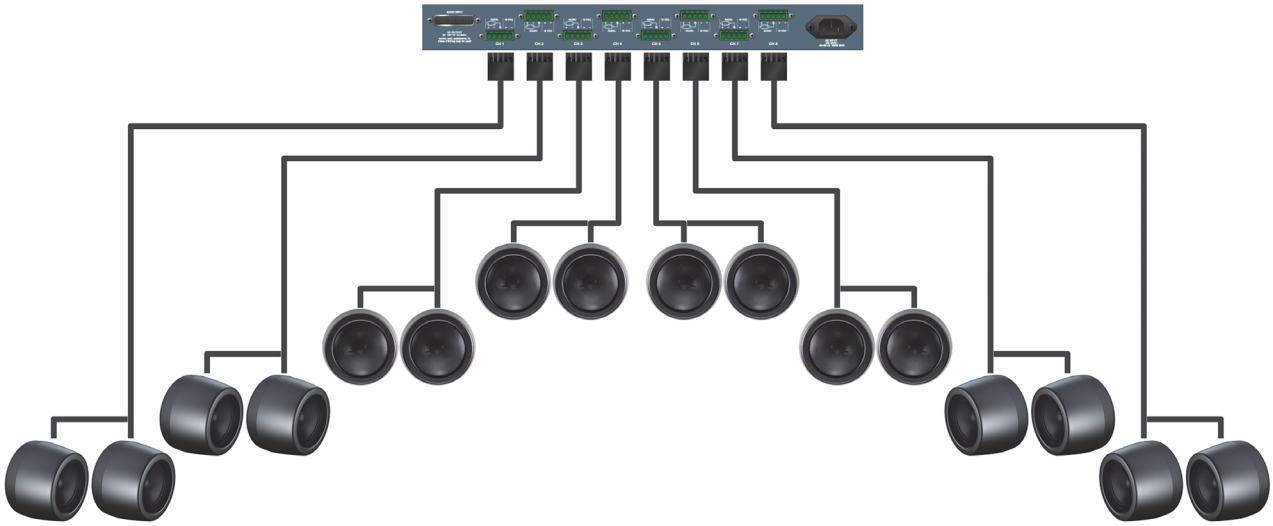

Figure 2: Stella-188 with 16 Stella-4s (Two Units Connected to Each Channel Output)

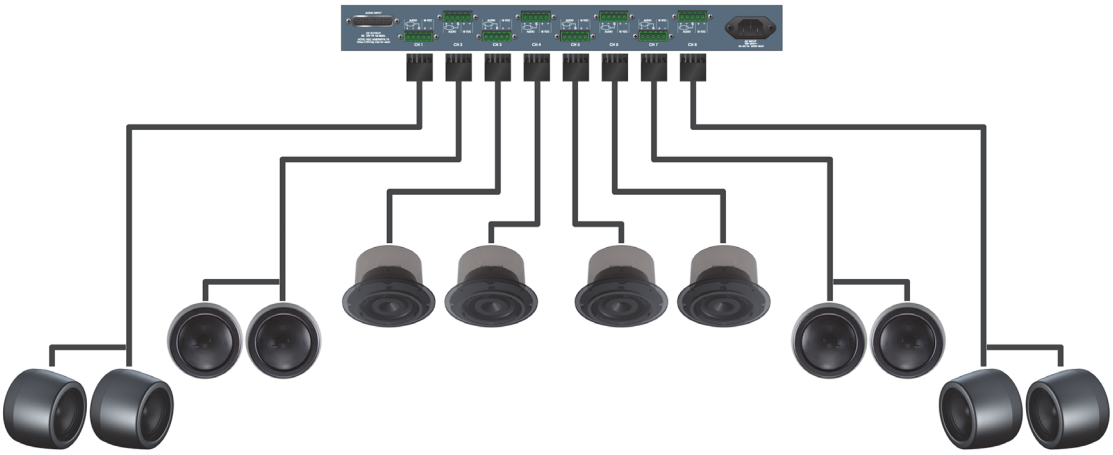

Figure 3: Stella-188 with Eight Stella-4s (Two Units Connected to Outputs 1, 2, 7, and 8) and Four Stella-8Cs (One Unit Connected to Outputs 3–6)

CHAPTER 3: STELLA MOUNTING OPTIONS

IMPORTANT SAFETY CONSIDERATIONS

When installing Meyer Sound loudspeakers, the following precautions should always be observed:

- All Meyer Sound products must be used in accordance with local, state, federal, and industry regulations. It is the owner's and user's responsibility to evaluate the reliability of any rigging method for their application. Rigging should only be carried out by experienced professionals.
- Use mounting and rigging hardware that has been rated to meet or exceed the weight being hung.
- Use mounting hardware appropriate for the surface where the loudspeaker will be installed.
- Make sure bolts and eyebolts are tightened securely. Meyer Sound recommends using Loctite® on eyebolt threads and safety cables.
- Inspect rigging hardware regularly and immediately replace worn or damaged components.

Using a Safety Cable with the Stella-4

Meyer Sound recommends attaching a safety cable to the Stella-4 before installation. This ensures the loudspeaker will not accidentally fall during installation, and it provides additional safeguards for the loudspeaker if for some reason its mounting hardware fails.

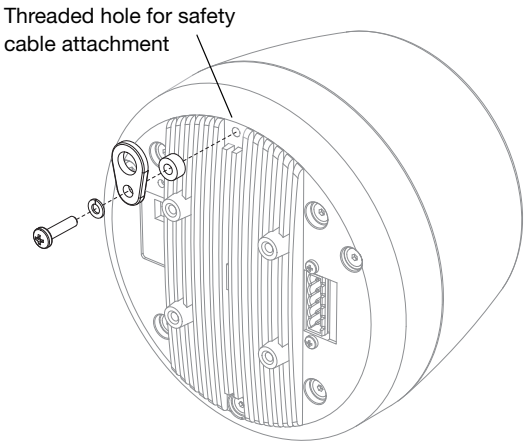

Stella-4 Safety Cable Attachment

A safety cable attachment is included with the Stella-4. The attachment includes a metal loop, screw, and two washers that screw into the back of the Stella-4. Once the safety cable attachment is securely installed, a safety cable (not included) can be attached to it.

MOUNTING THE STELLA-4

The Stella-4 can be mounted with the following bracketing options:

- The MMB bracket mounts the Stella-4 on a wall, ceiling, or single-gang electrical back box. You can also use the MMB to mount the Stella-4 with other third-party options like the OmniMount 20.5 ST.



Stella-4 MMB Bracket

- The MAMB adjustable bracket mounts the Stella-4 on a wall, ceiling, or single-gang electrical back box. In addition, the MAMB allows the Stella-4's position to be adjusted up to 45 degrees in any direction.



Stella-4 MAMB Adjustable Bracket

NOTE: Both the MMB and MAMB brackets ship with grommets installed in the four corner holes of the loudspeaker plates. These grommets absorb vibrations between the mounting surface and the Stella-4 loudspeaker and should not be removed.

Mounting the Stella-4 with the MMB Bracket

To mount the Stella-4 with the MMB bracket:

1. Separate the MMB wall plate from the MMB loudspeaker plate by unscrewing the thumbscrew.
2. Mount the MMB wall plate to the wall with one of the following options. Position the wall plate so its hinges are pointing up.

- Mount directly to the wall surface using screws in the four corner holes. Use fastening hardware appropriate for the mounting surface.
- Mount on a single-gang electrical back box using screws in the two center holes (top and bottom).

3. Attach the MMB loudspeaker plate to the back of the Stella-4 using screws in the four corner holes. The loudspeaker plate should be positioned parallel to the heat sink grooves on the back of the Stella-4 (so the Stella-4's Phoenix connector is *not* covered).

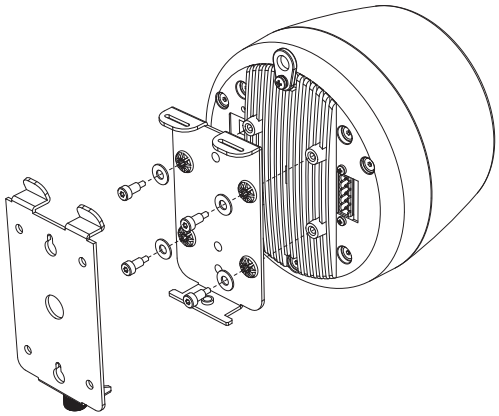

4. Attach the loudspeaker plate to the wall mount using the hinges and tighten the thumbscrew with a screwdriver (but don't over-tighten it).

Mounting the Stella-4 with the MMB Bracket and OmniMount 20.5 ST

To mount the Stella-4 with an MMB bracket and OmniMount 20.5 ST:

1. Separate the MMB wall plate from the MMB loudspeaker plate by unscrewing the thumbscrew.
2. Attach the MMB loudspeaker plate to the back of the Stella-4 using screws in the four corner holes. The loudspeaker plate should be positioned parallel to the heat sink grooves on the back of the Stella-4 (so the Stella-4's Phoenix connector is *not* covered).
3. Attach the OmniMount mounting plate to the MMB loudspeaker plate using screws in the two center holes (top and bottom).
4. Attach the mounting plate to the OmniMount ball-clamp assembly according to the manufacturer's instructions.

Mounting the Stella-4 with the MAMB Adjustable Bracket

To mount the Stella-4 with an MAMB adjustable bracket:

1. Separate the MAMB wall plate from the pivot plate assembly by removing the center screw and washers.

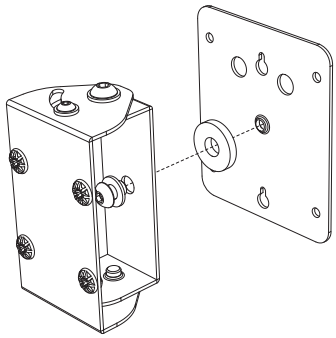

2. Mount the MAMB wall plate to the wall with one of the following options.

- Mount directly to the wall surface using screws in the four corner holes. Use fastening hardware appropriate for the mounting surface.
- Mount on a single-gang electrical back box using screws in the two center holes (top and bottom).

3. Attach the MAMB pivot plate assembly to the Stella-4 using screws in the four corner holes. The pivot plate assembly should be positioned parallel to the heat sink grooves on the back of the Stella-4 (so the Stella-4's Phoenix connector is *not* covered).

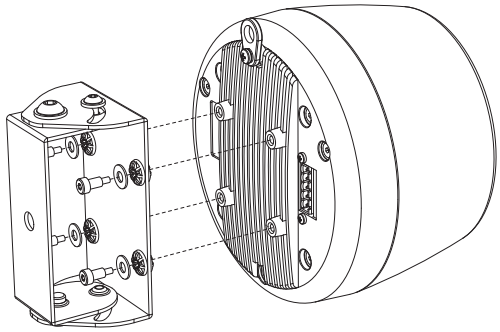

4. Attach the pivot plate assembly to the wall plate using the screw and washers previously removed. Tighten the screw.

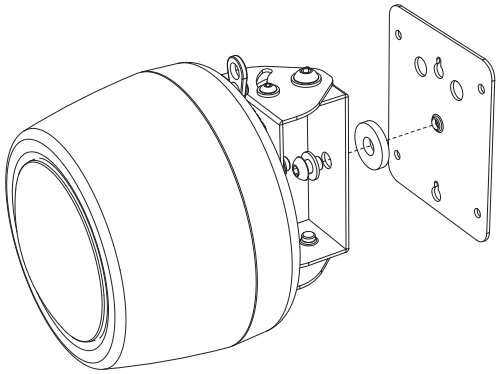

5. To adjust the position of the Stella-4, loosen the four pivot plate screws and position the Stella-4 as necessary. Tighten the pivot plate screws to secure the Stella-4.

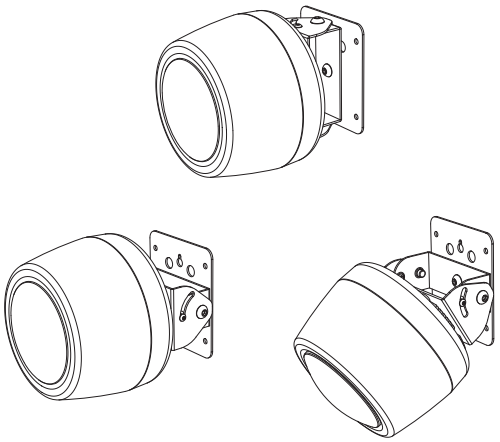

MOUNTING THE STELLA-4C

The Stella-4C can be mounted flush in ceilings and walls with any standard 8-inch backbox (such as the Atlas BMT95-8-7, Lowell CP-87 or XCP-87) with a minimum depth of 6.5 inches.

Installing the Stella-4C in a Backbox

To install the Stella-4C in a standard 8-inch backbox:

1. Mount the backbox in the ceiling or wall according to the manufacturer's instructions.
2. Place the Stella-4C in the backbox and secure it with the 8-32 screws included with the Stella-4C.

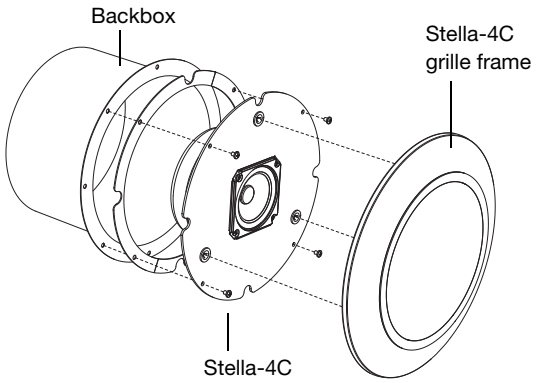

3. Attach the Stella-4C grille frame:

- Screw the three threaded studs (included with the Stella-4C) into the Stella-4C grille frame.
- Attach the grille frame to the Stella-4C by inserting the other ends of threaded studs into the three nylon latches in the Stella-4C.
- Gently push the grille frame in until it locks in place flush with the wall or ceiling.

NOTE: The Stella-4C's grille frame is held in place with three nylon latches. To remove the grille frame, gently pull it, evenly, until it releases from the latches.

MOUNTING THE STELLA-8C

The Stella-8C can be mounted flush in ceilings and walls with any standard 8-inch backbox (such as the Atlas BMT95-8-7, Lowell CP-87 or XCP-87) with a minimum depth of 6.5 inches.



Stella-8C Mounted in Third-Party Backbox

Installing the Stella-8C in a Backbox

To install the Stella-8C in a standard 8-inch backbox:

1. Mount the backbox in the ceiling or wall according the manufacturer's instructions.
2. Place the Stella-8C in the backbox and secure it with the 8-32 screws included with the Stella-8C.

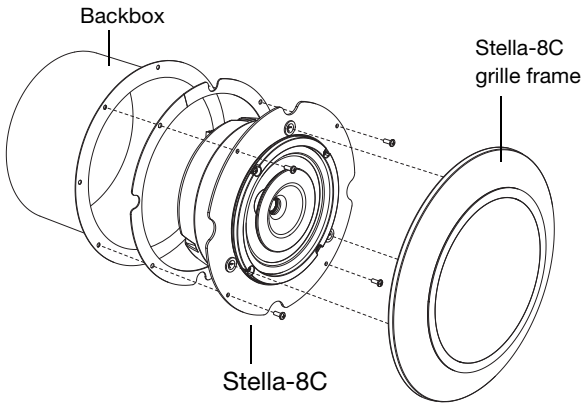

3. Attach the Stella-8C grille frame:

- Screw the three threaded studs (included with the Stella-8C) into the Stella-8C grille frame.
- Attach the grille frame to the Stella-8C by inserting the other ends of threaded studs into the three nylon latches in the Stella-8C.
- Gently push the grille frame in until it locks in place flush with the wall or ceiling.

NOTE: The Stella-8C's grille frame is held in place with three nylon latches. To remove the grille frame, gently pull it, evenly, until it releases from the latches.

APPENDIX A: STELLA SPECIFICATIONS

STELLA-4 SPECIFICATIONS

Operating Frequency Range	100 Hz – 18 kHz **Note:** Recommended maximum operating frequency range. Response depends on loading conditions and room acoustics.
Frequency Response	115 Hz – 16 kHz ±4 dB **Note:** Measured free-field with pink noise at 1 meter, 1/3rd octave resolution.
Maximum Peak SPL	108 dB (free field, measured with music referred to 1 meter) **Note:** Measured free-field with music and referred to 1 meter.
Phase Response	250 Hz – 18 kHz ±30°
Coverage	60° (3 kHz – 13 kHz ±10°); 120° (below 2 kHz)
Transducer	One 4” cone driver
Voltage Requirement	12–18 V DC
Audio/Power Connector	Single 5-pin Phoenix (3 pins for balanced audio, 2 pins for DC power)
Input Impedance	20 kΩ balanced internal isolation (Iso-Input) transformer
Nominal Input Sensitivity	+6 dBV (2.0 V rms, 2.8 V peak) continuous average is typically the onset of limiting for noise and music
Input Level	Audio source must be capable of delivering +15 dBV (5.6 V rms, 8.0 V peak) into 600 Ω to produce the maximum peak SPL over the loudspeaker’s operating bandwidth
Current Draw	1.5 A average; 3.3 A peak
Noise Floor	< 20 dB A weighted
Dimensions	5.39” (front OD) x 6.33” (max OD) x 5.32” D 137 mm (front OD) x 161 mm (max OD) x 135 mm D
Weight	5.0 lbs (2.27 kg)

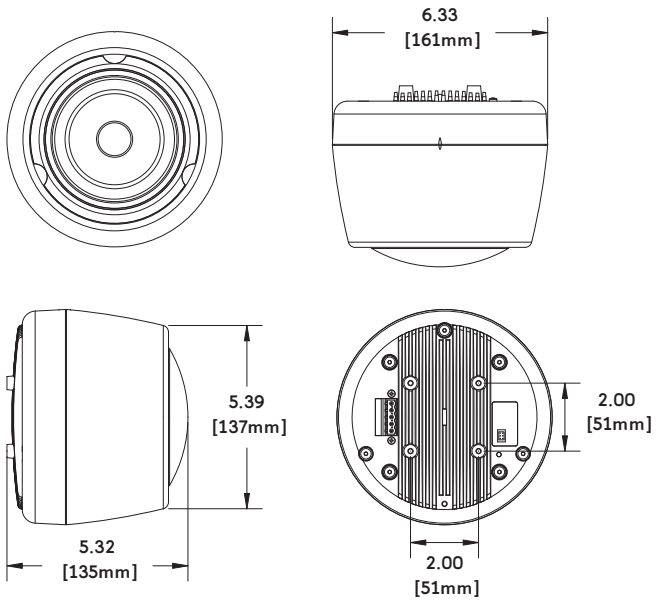

Stella-4 Dimensions

STELLA-4C SPECIFICATIONS

Operating Frequency Range	100 Hz – 18 kHz **Note:** Recommended maximum operating frequency range. Response depends on loading conditions and room acoustics.
Frequency Response	115 Hz – 16 kHz ±4 dB **Note:** Measured free-field with pink noise at 1 meter, 1/3rd octave resolution.
Maximum Peak SPL	108 dB **Note:** Measured free-field with music and referred to 1 meter.
Phase Response	250 Hz – 18 kHz ±30°
Coverage	60° (3 kHz – 13 kHz ±10°); 120° (below 2 kHz)
Transducer	One 4” cone driver
Voltage Requirement	12–18 V DC
Audio/Power Connector	Single 5-pin Phoenix (3 pins for balanced audio, 2 pins for DC power)
Input Impedance	20 kΩ balanced internal isolation (Iso-Input) transformer
Nominal Input Sensitivity	+6 dBV (2.0 V rms, 2.8 V peak) continuous average is typically the onset of limiting for noise and music
Input Level	Audio source must be capable of delivering +15 dBV (5.6 V rms, 8.0 V peak) into 600 Ω to produce the maximum peak SPL over the loudspeaker’s operating bandwidth
Current Draw	1.5 A average; 3.3 A peak
Noise Floor	< 20 dB A weighted
Dimensions	11.75” (front OD) x 4.00” (depth without grille) 298.42 mm (front OD) x 101.60 mm (depth without grille)
Weight	6.0 lbs (2.72 kg) without backbox

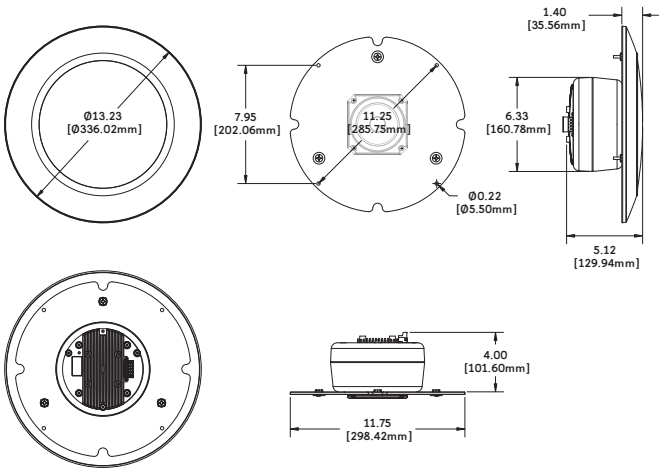

Stella-4C Dimensions

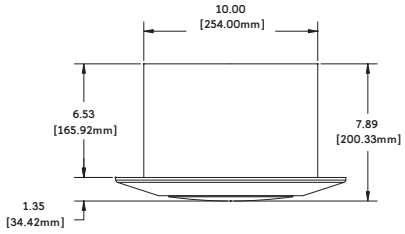

Stella-4C with Typical Third-Party Backcan Dimensions

STELLA-8C SPECIFICATIONS

Operating Frequency Range	100 Hz – 18 kHz **Note:** Recommended maximum operating frequency range. Response depends on loading conditions and room acoustics.
Frequency Response	115 Hz – 16 kHz ±4 dB **Note:** Measured free-field with pink noise at 1 meter, 1/3rd octave resolution.
Maximum Peak SPL	117 dB **Note:** Measured free-field with music and referred to 1 meter.
Phase Response	2 kHz – 18 kHz ±45°
Coverage	100°
Transducer	One 8” coaxial cone driver; one 0.75” metal dome tweeter
Voltage Requirement	12–18 V DC
Audio/Power Connector	Single 5-pin Phoenix (3 pins for balanced audio, 2 pins for DC power)
Input Impedance	20 kΩ balanced internal isolation (Iso-Input) transformer
Nominal Input Sensitivity	+6 dBV (2.0 V rms, 2.8 V peak) continuous average is typically the onset of limiting for noise and music
Input Level	Audio source must be capable of delivering +15 dBV (5.6 V rms, 8.0 V peak) into 600 Ω to produce the maximum peak SPL over the loudspeaker’s operating bandwidth
Current Draw	3.1 A average; 6.3 A peak
Noise Floor	<20 dB A weighted
Dimensions	11.66” (front OD) x 5.47” (depth without grille) 296.16 mm (front OD) x 138.86 mm (depth without grille)
Weight	9.0 lbs (4.1 kg) without backbox

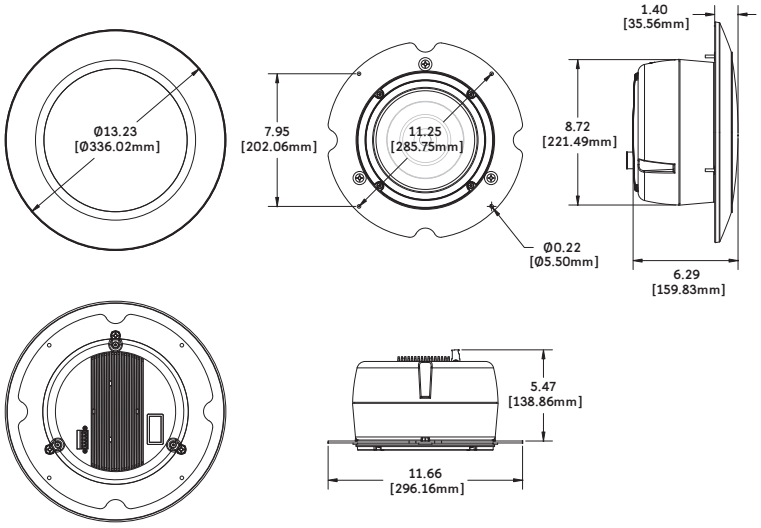

Stella-8C Dimensions

STELLA-188 SPECIFICATIONS

Audio Input	8-channel 25-pin D-sub connector (Tascam Mulitrack format)	
Outputs	8 channels of 5-pin Phoenix connectors (3 pins for balanced audio hard-wired to the D-sub input connector, 2 pins for DC power)	
Output Voltage	8 outputs of 18 V DC (4.0 A, fuse protected)	
Front Panel	On-off switch 8 LEDs to indicate output voltage 8 LEDs to indicate current	
AC Connector	Detachable IEC 320 (line, neutral/line, earth)	
Current Draw		
Idle Current	8 Stella-4s/Stella-4Cs (1 per channel)	0.583 A rms (115 V AC); 0.550 A rms (230 V AC); 0.659 A rms (100 V AC)
	16 Stella-4s/Stella-4Cs (2 per channel)	0.943 A rms (115 V AC); 0.751 A rms (230 V AC); 1.078 A rms (100 V AC)
	8 Stella-8Cs (1 per channel)	0.943 A rms (115 V AC); 0.751 A rms (230 V AC); 1.078 A rms (100 V AC)
Maximum Long-Term Continuous Current	8 Stella-4s/Stella-4Cs (1 per channel)	2.20 A rms (115 V AC); 1.20 A rms (230 V AC); 2.50 A rms (100 V AC)
	16 Stella-4s/Stella-4Cs (2 per channel)	4.50 A rms (115 V AC); 2.15 A rms (230 V AC); 5.50 A rms (100 V AC)
	8 Stella-8Cs (1 per channel)	4.50 A rms (115 V AC); 2.15 A rms (230 V AC); 5.50 A rms (100 V AC)
Burst Current	8 Stella-4s/Stella-4Cs (1 per channel)	2.40 A rms (115 V AC); 1.40 A rms (230 V AC); 2.80 A rms (100 V AC)
	16 Stella-4s/Stella-4Cs (2 per channel)	5.20 A rms (115 V AC); 3.00 A rms (230 V AC); 6.70 A rms (100 V AC)
	8 Stella-8Cs (1 per channel)	5.20 A rms (115 V AC); 3.00 A rms (230 V AC); 6.70 A rms (100 V AC)
Ultimate Short-Term Peak Current	8 Stella-4s/Stella-4Cs (1 per channel)	6.80 A peak (115 V AC); 3.50 A peak (230 V AC); 7.60 A peak (100 V AC)
	16 Stella-4s/Stella-4Cs (2 per channel)	13.0 A peak (115 V AC); 9.0 A peak (230 V AC); 15.0 A peak (100 V AC)
	8 Stella-8Cs (1 per channel)	13.0 A peak (115 V AC); 9.0 A peak (230 V AC); 15.0 A peak (100 V AC)
Inrush Current	17.2 A peak (115 V AC); 17.0 A peak (230 V AC); 18.4 A peak (100 V AC)	
Dimensions	1RU high 19.00" W x 1.73" H x 13.57" D (482.60 mm x 43.94 mm x 348.78 mm)	
Weight	13.0 lbs (5.9 kg)	

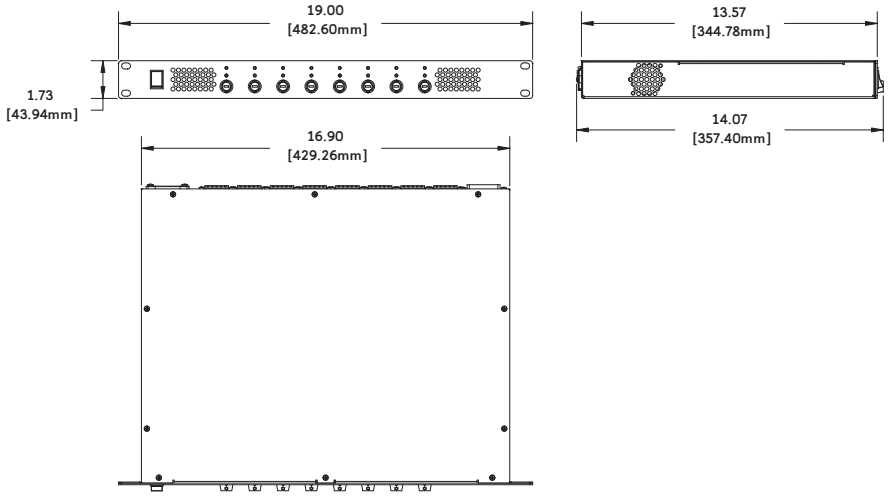

Stella-188 Dimensions



Meyer Sound Laboratories Inc.
2832 San Pablo Avenue
Berkeley, CA 94702
+1 510 486.1166
www.meyersound.com

© 2011, 2015
Meyer Sound Laboratories Inc.
Stella Operating Instructions, PN 05.161.005.01 B3