OPERATING INSTRUCTIONS

QuickFly™

Rigging and Mounting System

OPERATING MANUAL

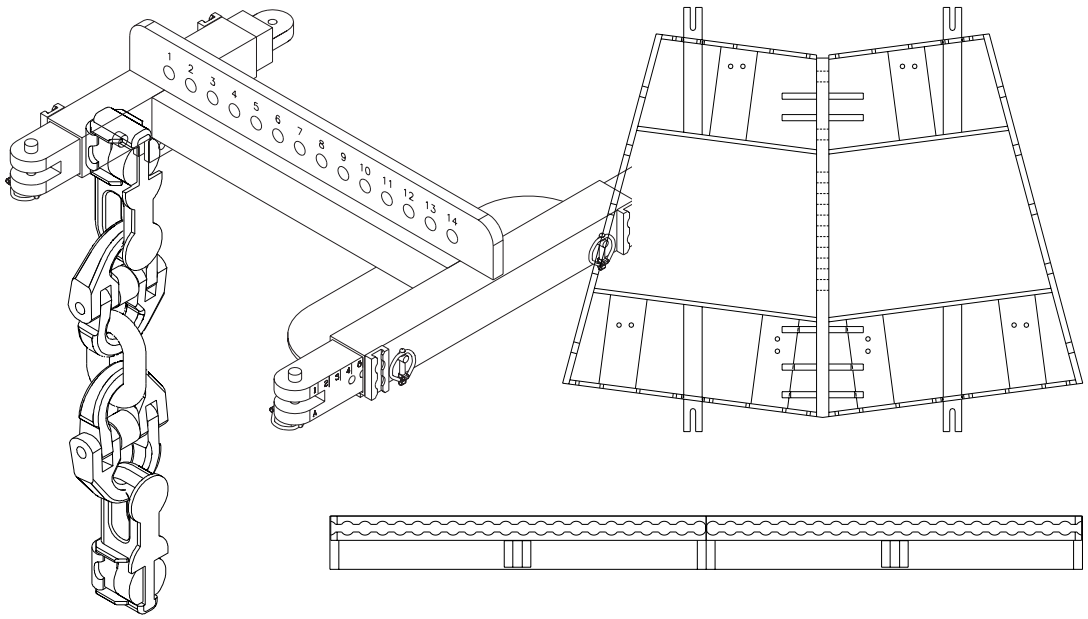

Superior engineering for the art and science of sound.

Meyer® Sound

Keep these important operating instructions.

CONTENTS

Safety Symbols Used	2
Introduction	3
Description and Advantages	3
Rigging Overview and Safety Issues	4
3.1 Important Notice ot QuickFly Owners and Users	4
3.2 Scope of This Manual	4
3.3 Load Ratings and Specifications	4
3.4 Regulatory Compliance	4
3.5 Advisory Note: Responsibilities Open to Interpretation	5
3.6 Inspection and Maintenance	5
3.7 Replacement Parts	5
3.8 Training	5
3.9 Owner Responsibility and Liability Exposure	6
3.10 Summary of Do's and Don'ts	6
MRF-6 Rigging Frame	6
MRFCB-6 Connecting Bar Kit	10
MTG-4 Top Grid	11
TGSB-4 Top Grid Spreader Bar	14
RCL-1 Rear Connection Link	14
MCC Series Front Connecting Chains	14
MCC-009, MCC-007, MCC-015	
SCL-1 Single Link Connection Chain	14
RFK-1 Retrofit Kit	15
Appendix	16
MTG-4 L-Track Rigging Grid	16
Array Examples	16
Care, Use, and Inspection	23
The Optional L-Track Rigging System	24
Contact Information	25

SYMBOLS USED

These symbols indicate important safety or operating features in this booklet and on the chassis.



Important operating instructions
Pour indequer important instructions
Zu wichtige betriebs-anweisung und unter-haltsanweisung zeigen
Para indicar importante funcionar y mantenimiento instrucciones



Frame or chassis
Masse, châssis
Rahmen oder chassis
Armadura o chassis

NOTE:
All Meyer Sound products must be used in accordance with local, state, federal, and industry regulations. It is the owner's and/or user's responsibility to evaluate the reliability of any mounting (rigging) method for their application. Mounting (rigging) should be done only by experienced professionals.

1. INTRODUCTION

Welcome to the Meyer Sound QuickFly™ rigging system manual. This document will give you a brief overview of important aspects of rigging and flying in general, as well as detailed information on the Meyer Sound QuickFly system. This manual includes instructions on how to configure, maintain and safely fly Meyer Sound loudspeakers with the QuickFly system.

PLEASE READ THIS ENTIRE MANUAL CAREFULLY BEFORE CONFIGURING AND DEPLOYING SYSTEMS USING QUICKFLY RIGGING. IN PARTICULAR, PLEASE PAY CAREFUL ATTENTION TO SECTIONS DEALING WITH SAFETY-RELATED ISSUES. THESE SECTIONS ARE UNDERSCORED. FOR CONVENIENT REFERENCE WE HAVE ALSO PROVIDED A SUMMARY OF DO'S AND DON'TS AT THE END OF THESE SECTIONS.

Information and specifications are applicable as of the date of printing. Updates and supplementary information will be posted on the Meyer Sound web site, or you may call Meyer Sound Technical Support and have updated information faxed, emailed, or mailed to you.

For the sake of simplicity in this manual we have grouped our loudspeaker products into two types. Each type shares the same basic footprint. These are:

Type 4 Products - This refers to MSL-3/4, DS-2/4, and PSW-2/4 loudspeaker systems

Type 6 Products - This refers to MSL-6, MSL-5 and PSW-6 loudspeaker systems.

2. THE MEYER SOUND QUICKFLY SYSTEM: DESCRIPTION AND ADVANTAGES

From the outset, Meyer Sound loudspeakers have offered a variety of rigging and fittings to allow configuration into larger multi-cabinet systems for either fixed installation or touring rental applications. To provide further flexibility and improved ease of set-up, Meyer Sound has introduced the QuickFly system. QuickFly provides sound reinforcement professionals with a rigging/arraying system that is safe, cost-effective and remarkably easy to use. QuickFly can dramatically reduce system set-up and breakdown times, and in some circumstances QuickFly's enhanced arraying capability can improve overall system performance. The Meyer QuickFly system is currently designed to integrate those Meyer Sound products most often used in larger flown arrays. Further expansion of the QuickFly system's availability to incorporate other Meyer Sound products is anticipated in the near future.

As a flying system, Meyer Sound's QuickFly rigging is both ingeniously simple and supremely flexible. It offers the ability to integrate a number of different Meyer Sound loudspeakers into accurate arrays and clusters ideally suited to the vast majority of fixed or touring requirements. With QuickFly, arrays may be assembled quickly and configured at angles that take full advantage of the controlled directional characteristics of Meyer Sound products. Exceptional flexibility in vertical angling usually eliminates the need for any pull-up points or strapping. QuickFly also accommodates multiple horizontal splay angles, from tight pack to optimum wide dispersion. The QuickFly system is based on the standardized L-Track hardware system. L-Track is widely employed in other situations, most notably in aircraft manufacture, but also in many other situations calling for adjustable mechanical mounting systems with a very high degree of tensile strength and secure, fail-safe fitting mechanisms. In addition to the L-Track hardware affixed to the loudspeakers, L-Track is an integral component of the various rigging frames and grids that comprise the complete QuickFly system. Meyer Sound supplies a number of pre-configured attachment devices that link directly to the loudspeakers or that are custom-designed for determining specific arraying characteristics. Many other attachment clips, locks and other accessories for L-Track are supplied as part of the system. Alternates are also widely available from other suppliers; however, care should be taken that only appropriate parts from reputable suppliers and are used. (See Section 3.7)

Three primary design goals behind Meyer Sound's QuickFly rigging system are based on safety and simplicity.

1. To transmit all load stresses through the metal rigging structures and not through the wood cabinet panels. This allows taller arrays of cabinets and adds confidence to those using the system (See Figure 1 on the following page).

2. To eliminate the need to place a worker's hands between cabinets when assembling a flown system. This speeds up the rigging process greatly reduces the possibility of worker injury.

3. To create a system that is safe.

MSL-4 and DS-4P cabinets equipped with the L-Track option utilize four full length pieces of stainless steel as load-bearing elements. We also offer a retrofit kit for cabinets not equipped with the L-Track option.

All Meyer Sound loudspeaker cabinets have internal, metal-fabricated bracing structures to which flying points (in this case the external L-Track strips) are secured. When loudspeakers are flown, all forces are carried through the track and the internal bracing structure keeping strain

away from the wooden cabinet. L-Track-equipped cabinets, in use with an MTG-4 top grid or MRF-6 rigging frame, ensure that an almost straight pull exists through the L-Track and connection fittings in a column of flown loudspeakers. An MTG-4-based system is illustrated in the following figure (Figure 1).

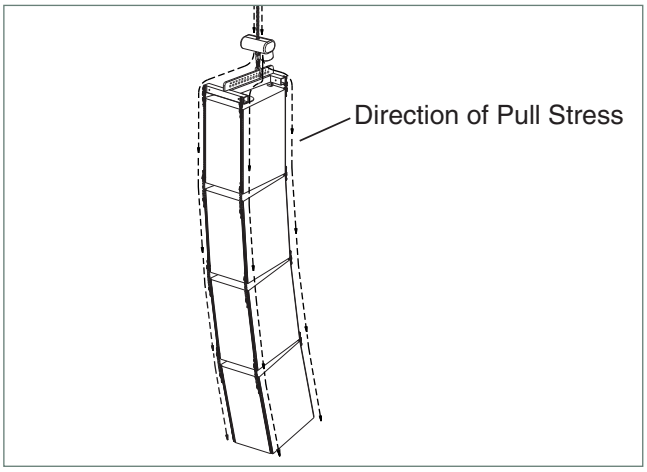

Figure 1

The same principle applies to an MRF-6 rigging frame when mounted onto a Type 6 loudspeaker: the load stresses travel through the internal steel framework of the loudspeaker, bypassing the wood panels of the cabinets. The MRF-6 is bolted directly onto the steel frame (both top and bottom) of the Type 6 cabinet.

In addition, QuickFly is designed to allow assembly of arrays without placing hands between the cabinets. All L-Track connections made between frames and/or Type 6 and Type 4 cabinets are accomplished in front of or behind the loudspeaker. The only exception is when an MTG-4 Rigging grid is attached to the bottom of a Type 6 array. However, in these cases, a greater space between cabinets will provide an increased safety margin.

Please review the operating instructions that accompanied the particular loudspeaker cabinets used in the system for information on enclosure dimensions and rigging track locations.

3. RIGGING OVERVIEW AND SAFETY ISSUES

3.1 Important Notice to QuickFly Owners and Users

PLEASE READ THIS SECTION CAREFULLY AND IN ITS ENTIRETY. IT CONTAINS CRITICAL INFORMATION REGARDING SAFETY ISSUES, INCLUDING GUIDELINES FOR GENERAL SAFE USE OF RIGGING SYSTEMS AS WELL AS ADVISORIES ON GOVERNMENT REGULATIONS AND LIABILITY LAWS. MEYER SOUND CANNOT BE HELD RESPONSIBLE FOR CONSEQUENCES THAT MAY ENSUE DUE TO FAILURE TO READ AND COMPLY WITH INFORMATION IN THIS SECTION.

3.2 Scope of this Manual

Although this manual contains much useful information on rigging in general, it does not claim to be a comprehensive resource on the subject. This manual assumes that the owners and/or users of a QuickFly system are knowledgeable and experienced in the areas of rigging and flying loudspeaker systems. Many issues of crucial concern, such as the determination of appropriateness and condition of venue rigging points, cannot be addressed here. Therefore, the user must assume all responsibility as to the appropriate use of the QuickFly system in any particular location or circumstance.

The suspension of large, heavy objects in public places is subject to numerous laws and regulations at the national/federal, state/provincial and local levels. This manual does not address the specifics of any such applicable laws and government regulations. This manual details procedures and practices consistent with those generally acknowledged as allowable and safe in the United States. However, the user must assume responsibility for making sure that use of the QuickFly system and its components in any particular circumstance or venue conforms to all applicable laws and regulations in force at the time.

3.3 Load Ratings and Specifications

Long-term safe operation is a central concern in the design and manufacture of any rigging/flying system. Meyer Sound has taken great care in material selection and component design. In all critical cases, load points are redundant, with a safety margin that allows one or more load points to fail and still maintain system integrity. After manufacture, all load-critical system components are individually inspected.

All load ratings and other specifications given in this manual are the result of accepted engineering practice and careful testing. However, such specifications and ratings are subject to change. Users are advised to check the QuickFly section of the Meyer Sound web site (or contact Meyer Sound Technical Support) at regular intervals to check for updated or revised information.

3.4 Regulatory Compliance

The engineering practices and Safe Working Load (SWL) ratings of the QuickFly system are in full compliance with all known regulatory statutes currently applicable in the

United States. All working loads are based on a 5:1 safety factor.

However, as noted above, there are wide variations internationally in the regulations and practices applying to suspension of sound systems in public places. Although regulations in the USA are generally among the most stringent, safety codes may be even stricter in a few localities (such as those highly prone to earthquakes). In addition, applicable safety codes are open to interpretation: government officials in one location may have a stricter interpretation than officials in other locations, even when operating under the same regulations and in the same legal jurisdiction.

Consequently, users of QuickFly should be prepared to take additional safety assurance measures beyond those outlined in this manual. In all cases, it is the sole and express responsibility of the user to make certain that any Meyer Sound loudspeaker system is suspended in accordance with all applicable national, state/provincial and local regulations.

3.5 Advisory Note: Safety Responsibilities Open to Interpretation

In most touring applications of rigging systems, the touring sound provider is normally responsible only for ensuring the safety of the suspension system below the attachment point. The safety and suitability of the attachment point is generally seen as the responsibility of the venue owner or operator. However, this distinction ("above the hook" versus "below the hook") may be open to interpretation. Touring system operators would be well advised to double check to make certain that attachment points are approved and suitably load rated, and that the points used are those identified as such by the venue owner or operator. As an extra precaution, careful inspection of the attachment points is advised before flying, particularly in older venues or those hosting frequent events using large sound and lighting systems. In any case, Meyer Sound QuickFly systems are intended only for suspension from approved rigging points, each known to have ample SWL margins for the system components suspended below them.

3.6 Inspection and Maintenance

The Meyer Sound QuickFly system is an assembly of mechanical devices, and is therefore subject to wear and tear over prolonged use, as well as damage from corrosive agents, extreme impact or inappropriate use.

Because of the safety issues involved, users must adopt and adhere to a schedule of regular inspection and maintenance. In touring applications, key components must be inspected before each use. Such inspection will include examination of all load-bearing components for any sign of undue wear, twisting, buckling, cracking, rusting or other corrosion. In regard to rust and corrosion, all main components of the QuickFly system are either protected by an exterior coating or are made from stainless steel, which is impervious to rust and resistant to most corrosive fluids. Nevertheless, normal use and shipping vibrations can wear through the protective coatings, and extremely corrosive fluids (such as battery acid) can cause severe damage with prolonged exposure even to protected parts. Particular attention should be given to screws, bolts and other fasteners to make certain the fittings are tight and secure. Metal seams and welds should be examined for any sign of separation or deformation. Meyer Sound strongly recommends that written documentation be maintained on each QuickFly system, noting date of inspection, name of inspector, points of system checked, and any anomalies discovered.

In addition to routine checks on the road for touring systems, Meyer Sound also recommends a careful, comprehensive system examination and testing "at home" in the warehouse or other appropriate location at regular intervals. At this time, each component should be carefully inspected under ideal lighting conditions, and then the entire system should be flown as used for a final comprehensive check.

If any anomalies or defects are discovered that could possibly affect the safety or integrity of the system, any affected parts or subsystems should be replaced in their entirety before that part of the system is flown again. (See 3.7 below.)

3.7 Replacement Parts

Any component found to be defective, or any safety-related component you even suspect might be defective, should be replaced with the equivalent, approved part. In the case of parts specific to the QuickFly system, these parts should be ordered directly from Meyer Sound. No attempt should be made to substitute what appear to be equivalent or "mostly the same" generic replacements.

Many other parts used in a QuickFly system will be identical to those used in other L-Track applications. To the best of our knowledge, all suppliers of L-Track components are reputable and their products reliable. However, Meyer Sound has no way of assuring the quality of products made by these various suppliers. Therefore, Meyer Sound cannot be held responsible for any problems caused by components that were not supplied by Meyer Sound.

3.8 Training

Considering its sophistication and flexibility, the QuickFly system is relatively straightforward and easy to use. Nevertheless, there are key points of assembly, rigging and flying that must be fully mastered before a system is flown. Users should read this manual in its entirety before attempting to deploy a QuickFly system. (You may make additional photocopies of this manual as necessary for in-house training purposes only; please do not distribute outside your company.)

3.9 Owner Responsibility and Liability Exposure

Flying and rigging systems are unique in the sound reinforcement industry in that misuse, improper deployment or failure of key components could lead to significant property damage, injury or loss of life.

At Meyer Sound, we have gone to great lengths to preclude any possibility of critical component failure under normal use and within a reasonable program of preventive maintenance. All QuickFly system parts are engineered to provide ample safety margins for load bearing, torsional stress and impact. Suggested system configurations have been thoroughly tested for stability and balance using computer modeling and extensive field-testing. Each production component is carefully inspected before shipment to the customer, and each crucial part is identified to trace and isolate any potential problems.

Nevertheless, the Meyer Sound QuickFly system is not, if you will pardon the expression, "idiot proof." Although we have tried to account for oversight in the field (improper or incomplete assembly) and possible misuse (flying too many loudspeakers from a frame), it is unreasonable to assume that a key component failure will never occur under any circumstances.

Consequently, is it the express responsibility of the user to ensure that the QuickFly system is deployed in strict accordance with the strength ratings, rigging techniques and other precautionary advisories given in this manual and in any manual updates. Additionally, the user is also solely responsible for ensuring that the Meyer Sound QuickFly system is deployed in accordance with all applicable government safety regulations.

3.10 Summary of Do's and Don'ts

The Do's:

- Inspect all components of your QuickFly rigging system before each use.
- Follow local, state/provincial, and national safety regulations for all installations.
- Suspend the QuickFly rigging system only from rigging points as directed.
- Use trained personnel who have read and have a reference copy of this manual.

The Don'ts:

- Don't install a Meyer Sound QuickFly rigging system before careful review of this manual.
- Don't use untrained personnel to install your QuickFly rigging system.
- Don't (as in never) load a rigging system beyond its rated capacity.
- Don't use QuickFly replacement parts other than genuine Meyer Sound parts.
- Don't use a QuickFly rigging system with a damaged or excessively worn component.
- Don't use shortcuts or otherwise compromise safety.

4.0 MRF-6 RIGGING FRAME PART NO. 40.053.048.01

4.1 Overview

The MRF-6 is primarily used for horizontal and vertical arraying of Type 6 products. Additionally, the MRF-6 incorporates L-Track horizontally mounted on the frame for suspension below of L-Track equipped cabinets (or those utilizing the RFK-1 retrofit kit). Using the MRFCB-6 connecting bar kit, multiple MRF-6 frames can be vertically arrayed with splay angles from 0° to 10°. Horn coupled long throw arraying can easily be achieved (Figure 2) to allow for variations in narrow coverage control. The MRF-6 also accommodates basic horn up/horn up arraying as well as attachment of MSL-6s to PSW-6 subwoofers. The MRF-6 easily retrofits to new or existing products.

4.2 Kit Contents

The MRF-6 kit contains the welded frame assembly and all the hardware necessary to attach the frame to a cabinet and to secure two frames side-by-side. The frame itself is a welded 6061-T6-aluminum construction. Four sections of heavy-duty aluminum L-Track are attached to the frame. Grade 8 bolts and washers are provided to attach the frame to the Type 6 loudspeaker cabinet. Split ring lock washers and sealant are included as well. Two 3/4" bolts with nuts and washers are provided for securing two frames together horizontally by bolting through the side plates of the frame assembly.

Meyer Sound Part Numbers are included below to assist you in ordering replacement components from the factory.

Front L-Track *(MSPN 61.053.047.01)*
Rear L-Track *(MSPN 61.053.047.02)*
12x Grade 8 5/16" Bolts *(MSPN 102.170)*
12x Grade 8 5/16" Washers *(MSPN 114.028)*
12x Split ring lock washers *(MSPN 115.526)*
2x 3/4" SS Bolts *(MSPN 101.171)*
4x 3/4" SS Washers *(MSPN 113.025)*
2x 3/4" SS Nuts *(MSPN 109.012)*
1 x Tube of Silicone Sealant (GE IS800 Series) *(MSPN 645.002)*

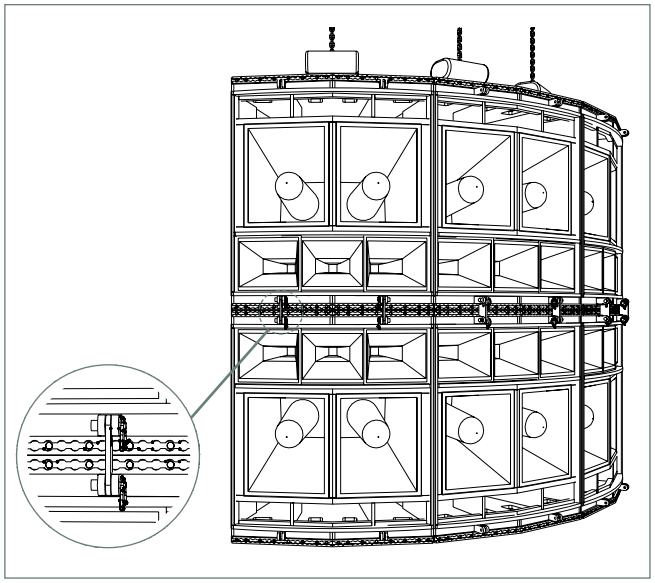

Figure 2

Note: Short connecting bars can be used in front in horn coupled configurations (no vertical splay). See the Appendix **for more examples.**

4.3 Simple System Examples

Figure 2, above, shows four MSL-6 cabinets flown in a configuration that will give 60 degrees horizontal coverage by 13 degrees vertical coverage. Figures 7 and 8 on Page 8 show two Type 4 loudspeakers attached to the Type 6 MSL-6 via 8 SLC-1 connecting chains. Each MSL-6 is fitted with an MRF-6 rigging frame on its top and bottom. The MRF-6 is attached to the lifting motor set via a 5/8" (or larger) shackle through one of the lifting points located along its central structural member.

4.4 Attaching the MRF-6 to a Type 6 product

The MRF-6 rigging frame attaches to a Type 6 loudspeaker's internal steel rigging structure (See **Section 4.5**) through the cabinet's existing rigging attachment points. Tools required are a ratchet with a 1/4" allen bit and a 1/2" socket, and a caulking gun. This procedure takes 20 to 30 minutes. Using the 1/4" allen bit, remove all six of the existing pivoting lifting rings from the cabinet. (Figure 3) The rings will be replaced; set them nearby.

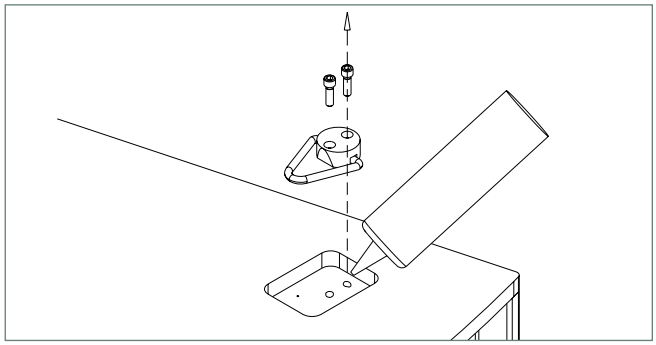

Figure 3

Using a caulking gun, place a small amount of silicone evenly over each hole just prior to positioning the frame onto the cabinet (Figure 3).

Note: The holes must be resealed using the included silicone sealant (GE IS800 series) to avoid creating air leaks from the cabinet's airtight chambers.

Immediately after applying the silicone, return the triangle rings and the round blocks to their proper places on the cabinet. Be careful to position them over the mounting holes so that the thread path of each mounting bolt remains unobstructed. Place the MRF-6 aluminum frame on the cabinet, positioning it over the mounting holes (Figure 4). Be careful not to change the position of the rings and round blocks.

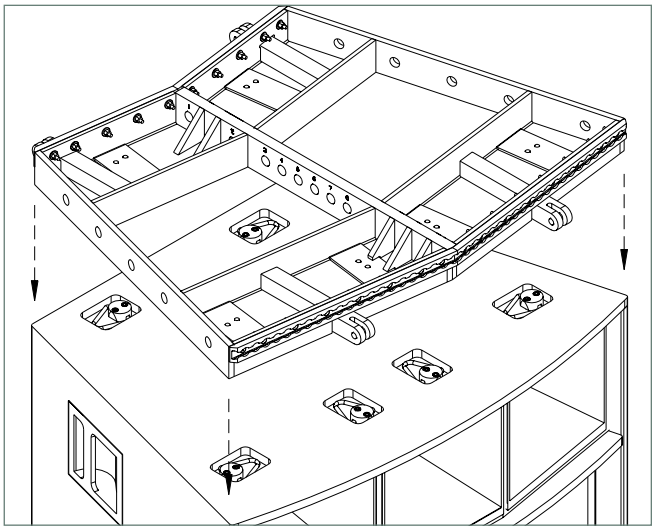

Figure 4

Using a 1/2" socket and the hardware provided, attach the MRF-6 to the cabinet (Figure 5).

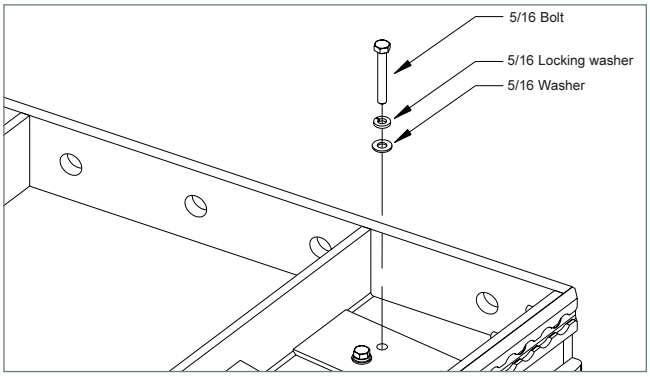

Figure 5

Alignment with all twelve holes on the cabinet is easiest if you start by first hand-tightening the bolts through the front inner lifting rings, proceeding next to the rear lifting ring locations and finish with the front outer locations. Once the bolts are hand-tightened, torque each of them down as evenly as possible to avoid any possible damage to the cabinet. The bolts should be torqued to 10-20 ft-lbs. Care should be taken to avoid cross threading or over-tightening the bolts. Although locking washers are used, the bolts always should be inspected prior to use in a flown system. Ensure that all bolts are properly tightened and evenly secure the frame to the cabinet.

An MRF-6 may be fitted only on the top of the enclosure if other loudspeaker systems will be suspended below using the standard pivoting lifting rings (Figure 6).

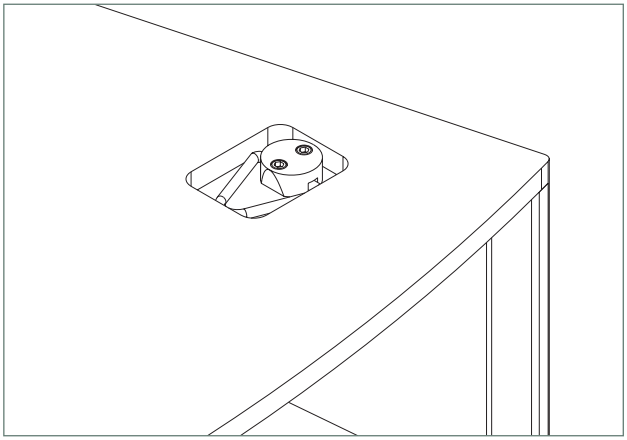

Figure 6

Frames should be fitted to both the top and bottom of the enclosure in all configurations where loudspeakers will be suspended below using the front and rear horizontally mounted L-Track. Further Type 6 loudspeaker systems may be mounted in this manner, or you may transition to Type 4 enclosures via a directly mounted MTG-4 or the TGSB-4 Spreader Bar transitioning to two MTG-4 top grids.

4.5 The cabinet's internal frame and structure

All Type 6 loudspeaker cabinets are designed to be flown. The internal bracing contained within makes them extremely strong structurally.

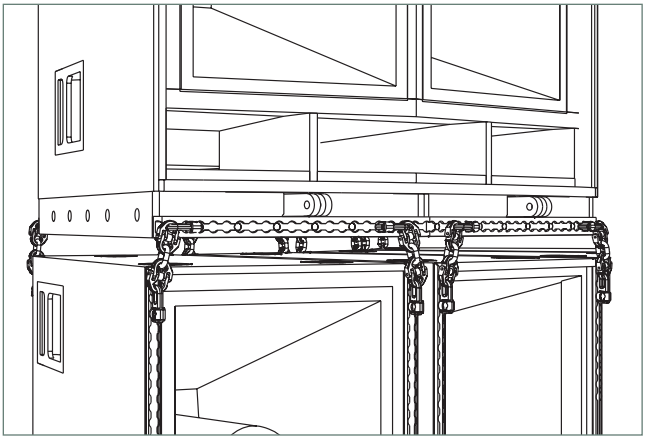

Figure 7 Front-Mounted L-Track

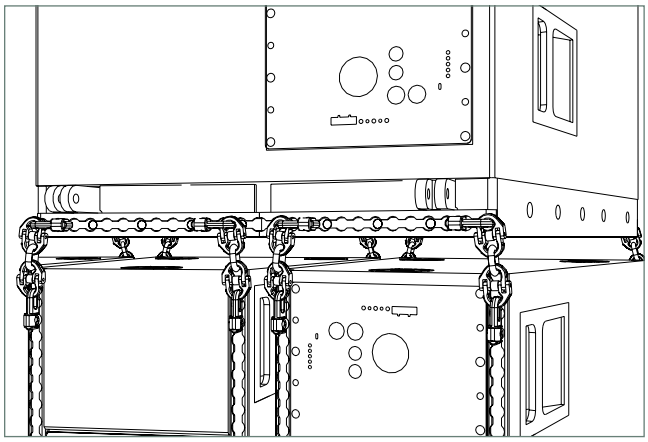

Figure 8 Rear-Mounted L-Track

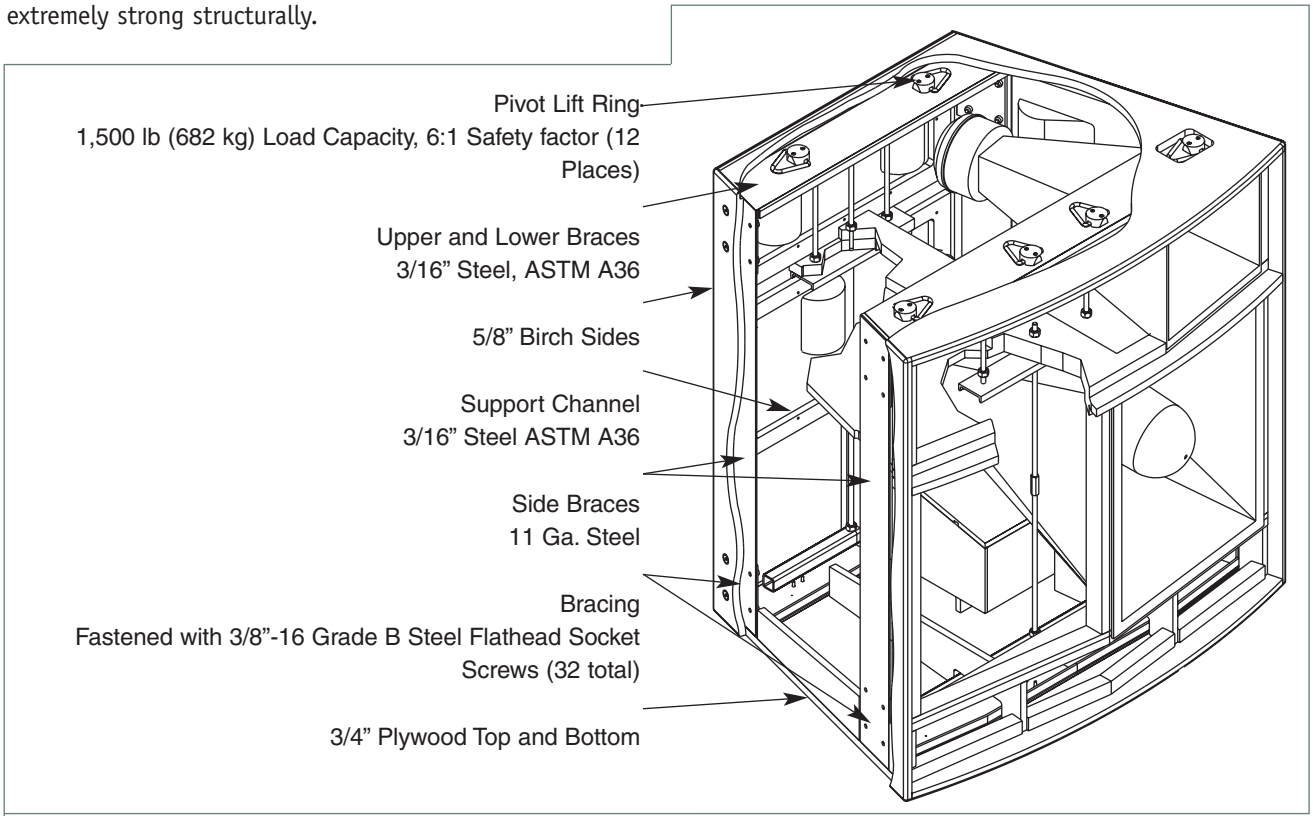

Figure 9 The internal bracing of a Type 6 loudspeaker cabinet

Ratings for the cabinets themselves are detailed in the operating instructions supplied with that particular product. Please note that the pivoting lifting ring flying points are rated for a **single point**. Although the MRF-6 is attached using multiple points, this does not mean the ratings can be summed to calculate the frame's safe working load. The frame provides distribution of the load over multiple points on the cabinet, which increases the strength beyond a single point, but it is still less than the sum of all of points of attachment. This is due to the limitations of the cabinet as well as the frame itself (Figure 10).

4.6 Transitioning to L-Track-equipped cabinets (or those fitted with the RFK-1 retrofit frame)

L-Track is provided along the full width of the front and back of each MRF-6 rigging frame to allow L-Track equipped cabinets (or those equipped with the RFK-1 retrofit frame) to be hung underneath MRF-equipped cabinets. Each L-Track location on an MRF-6 frame is rated at 973 lbs (442 kg). Each L-Track fitting (New Haven NH47556-12 no ring) is rated at the manufacturer's recommended safe working load. Refer to the **Working Load Limits** section on Page 24 of the **Appendix** for their ratings.

Warning: L-Track connections must not be used to connect MRF-6s frame-to-frame. Only MRFCB-6 Connecting Bars should be used.

4.7 Building an Array

For easy flying, as well as for adjusting for an array's center of gravity and setting of tilt angles, a series of pick-up points is arranged along the center structural member of the MRF-6 (Figure 10). Each point is differently rated to allow for variations in stress created by the different possible orientations. Each point can accept a 5/8" (3.25 US Ton) shackle and this in turn is offered up to a chain motor.

Warning: A single rigging point per column must be used when flying MRF-6-equipped louspeakers.

To build an array, place Type 6 loudspeakers (equipped with MRF-6 frames) on a flat surface or wheel dolly. Attach the rigging shackle to the desired rigging point on the central structural member. A column always must be raised from the center structural member of the MRF-6. Figure 10 shows a comprehensive illustration of load limits for each of the MRF-6's pick-up holes. Be aware that the pick-up holes are not equally rated.

The MRF-6 frames are primarily designed to be attached vertically to one another. Horizontal attachment is possible, but is provided for the sole purpose of keeping loudspeakers in good acoustic alignment and not provided for picking up an adjacent cabinet unsupported by its own rigging point. If frames are horizontally bolted together,

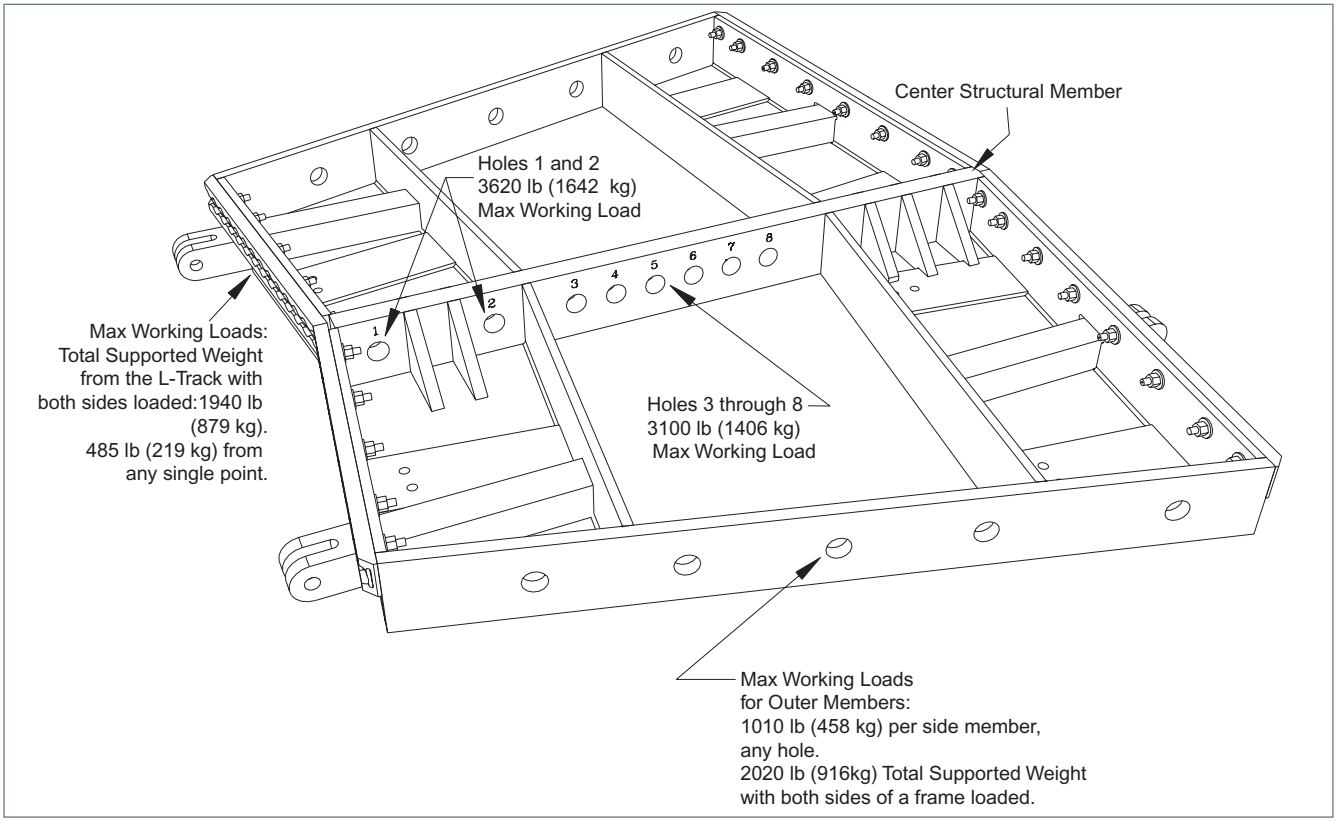

Figure 10

attachments must be made at both the top and bottom of the columns being aligned. Also, care must be taken to keep the points at the top of each row equally loaded. Both requirements are accomplished easily if all the bolts are installed at one time while the cabinets are hanging one to two feet above the ground and have been aligned vertically. Failure to follow these precautions may result in damage to the MRF-6 and/or the alignment bolts. If vertical offset beyond 0 degrees is required between two or more rows of cabinets, the frames cannot be bolted together horizontally. In such cases, each vertical column of loudspeakers must be hung independently. Care must be taken when setting the rigging points to keep the cabinets in proper acoustic alignment to one another (Figure 10a, below).

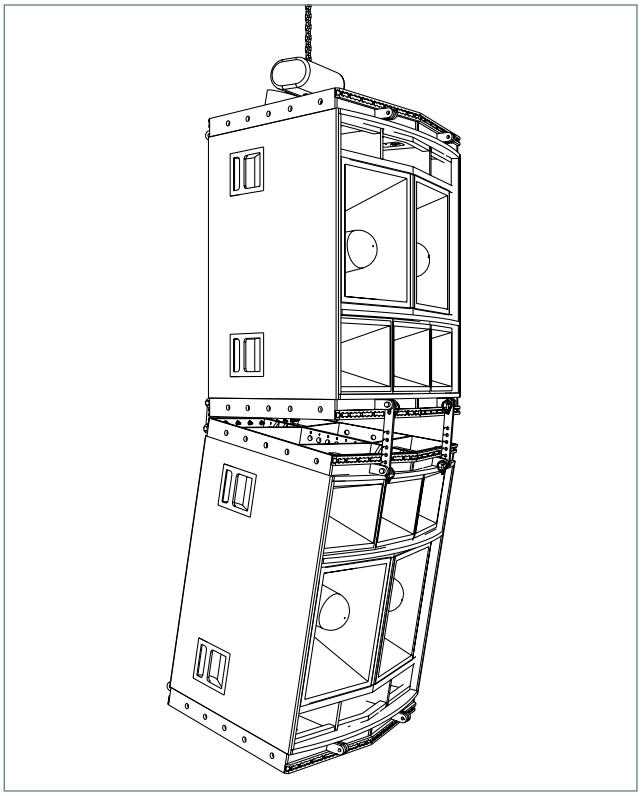

Figure 10a MSL-6s in acoustic alignment

4.8 Transition to L-Track-Equipped Type 4 Loudspeakers

Transitioning between the MRF-6 and an L-Track equipped Type 4 loudspeaker can be achieved in two ways. The first option is to use the RCL-1 Connection Link at both front and rear corners of a Type 4 loudspeaker. This will keep the cabinets in horizontal alignment with no vertical splay. Other Type 4 cabinets can be attached to create the desired horizontal coverage (See the **Appendix**) Figure 10b shows this type of transition. Note that the L-Track clips are attached to the MRF-6's horizontal L-Track in opposing orientation: the L-Track clip is attached to the L-Track with the hammerlock to the left on the left hand side attachment and to the right on the right hand side attachment. This produces a neat and secure transition.

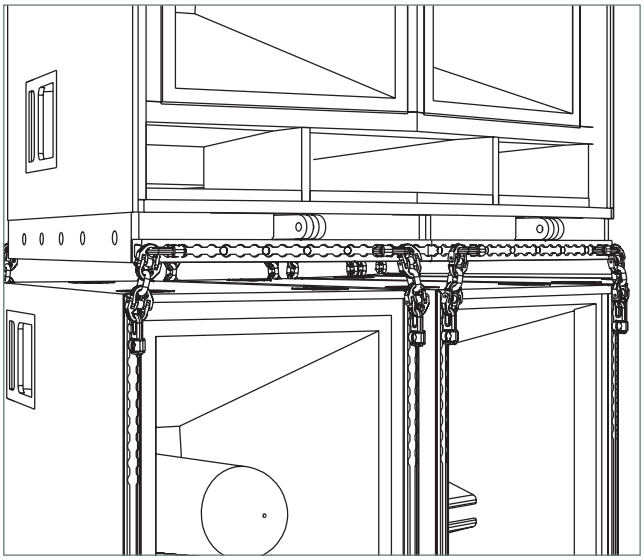

Figure 10b

The second option is to use RCL-1 Connection Links at the rear corners of the Type 4 cabinet but substitute one of the MCC- Series Front Connection Chains for front attachment to allow vertical splay. See the **Appendix** for a table of recommended splay angles.

5.0 MRFCB-6 CONNECTING BAR KIT PART NO. 40.053.049.01

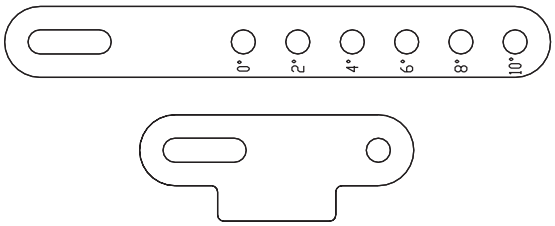

Figure 11 The Long and Short MRFCB-6 Connecting Bar

5.1 Overview

The MRFCB-6 connecting bar kit consists of two short and two front connecting bars along with all set pins and linchpins for joining two MRF-6 frames together vertically. The front connecting bars provide multiple holes for adjusting vertical offset from 0° to 10°.

5.2 Kit Contents

2 x Part No. Short connecting bars
(MSPN 61.053.046.01)
2 x Part No. Long connecting bars
(MSPN 61.053.046.02)
8 x Part No. Set pins *(MSPN 61.053.054.01)*
8 x Part No. linchpins *(MSPN 124.049)*

Cabinets can be attached to one another vertically using the optional connecting bar kits (MRFCB-6). These front bars allow adjustment of the vertical splay between cabinets, in two-degree increments, up to ten degrees (Figures

11a and 11b). The set of short connecting bars acts as a "hinge" and attaches the rear of the frames together leaving minimal space between the MRF-6-equipped Type 6 loudspeakers. The short bars should be mounted with the tab inward. This tab helps the Type 6 loudspeakers maintain alignment when vertical splay is applied. These bars are secured using the set pins and linchpins provided in the kit.

In applications where two MSL-6 cabinets are joined in a horn up/horn down configuration with no splay (Figure 2), it may be preferable to use the short connecting bars on the front and the longer bars on the rear, as the long connecting bars may protrude into the high frequency horn pattern.

Four connecting bars must always be used when attaching MRF-6-equipped cabinets together.

Note: Figures 11a and 11b show different views of the MSL-6 array shown in Figure 10a.

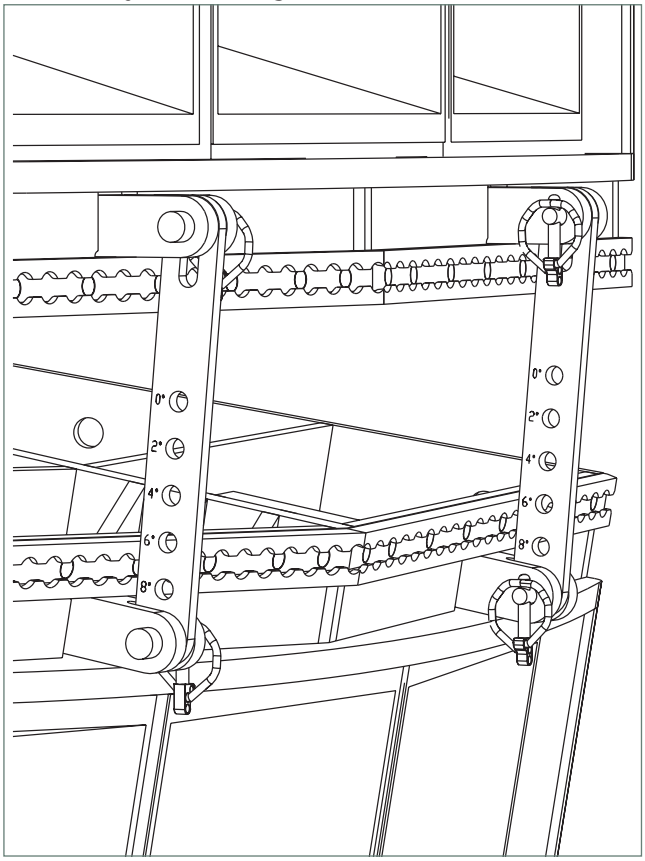

Figure 11a MSL-6 at 10 degrees, Front View

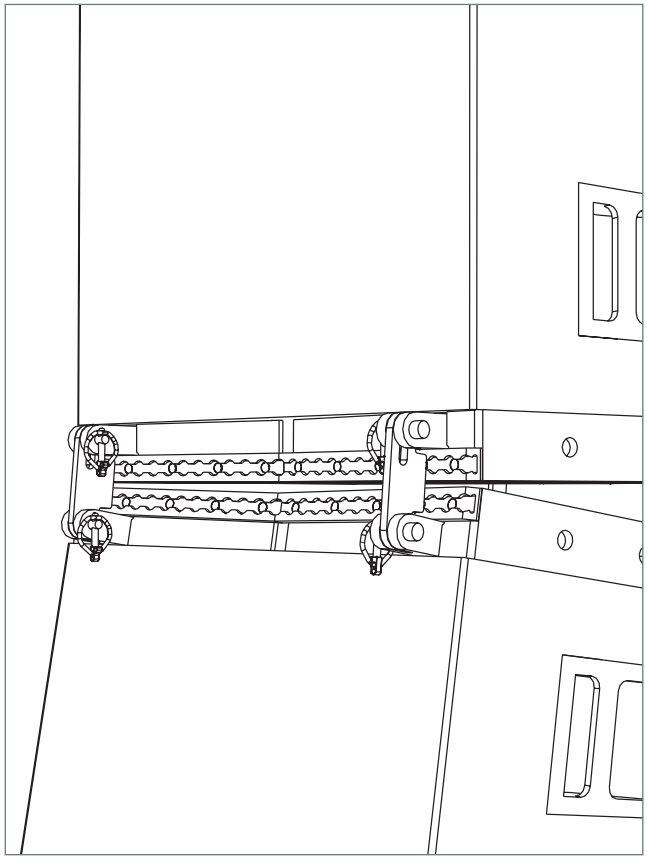

Figure 11b MSL-6 at 10 degrees, Rear View

6.0 MTG-4 TOP GRID PART NO. 40.031.121.03

6.1 Overview

The MTG-4 is designed to quickly and safely lift and array Type 4 loudspeakers. The MTG-4 allows Type 4 loudspeakers to be picked up in vertical columns. One MTG-4 is required per column of cabinets in an array. Multiple MTG-4 Top Grids can be locked together using the MTG-4's retractable arms. These arms are designed to horizontally splay loudspeakers at 15°, 18.75°, 22.5°, 26.25° and 30° angles. See the **Appendix** for examples of recommended settings for typical configurations. The arms adjust outward to create required space between grids when vertically arraying lower cabinets.

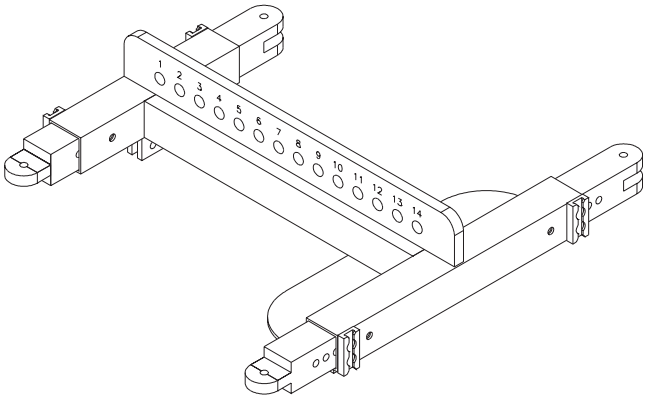

Figure 12 The Meyer Sound MTG-4 Top Grid

6.2 Kit Contents

1x Top Grid *(MSPN 45.031.115.01)*
2x Rear arms (1x male/1x female)
2x Front arms (1x male/1x female)
6x Set pins *(MSPN 61.031.123.01)*
6x Linchpins *(MSPN 124.049)*

6.3 System Examples

Figure 13, below, illustrates the integration of QuickFly rigging hardware in an an array of DS-4Ps flown using the MTG-4. Each of the featured components can be found on Page 14.

Please see the **Appendix** for further examples.

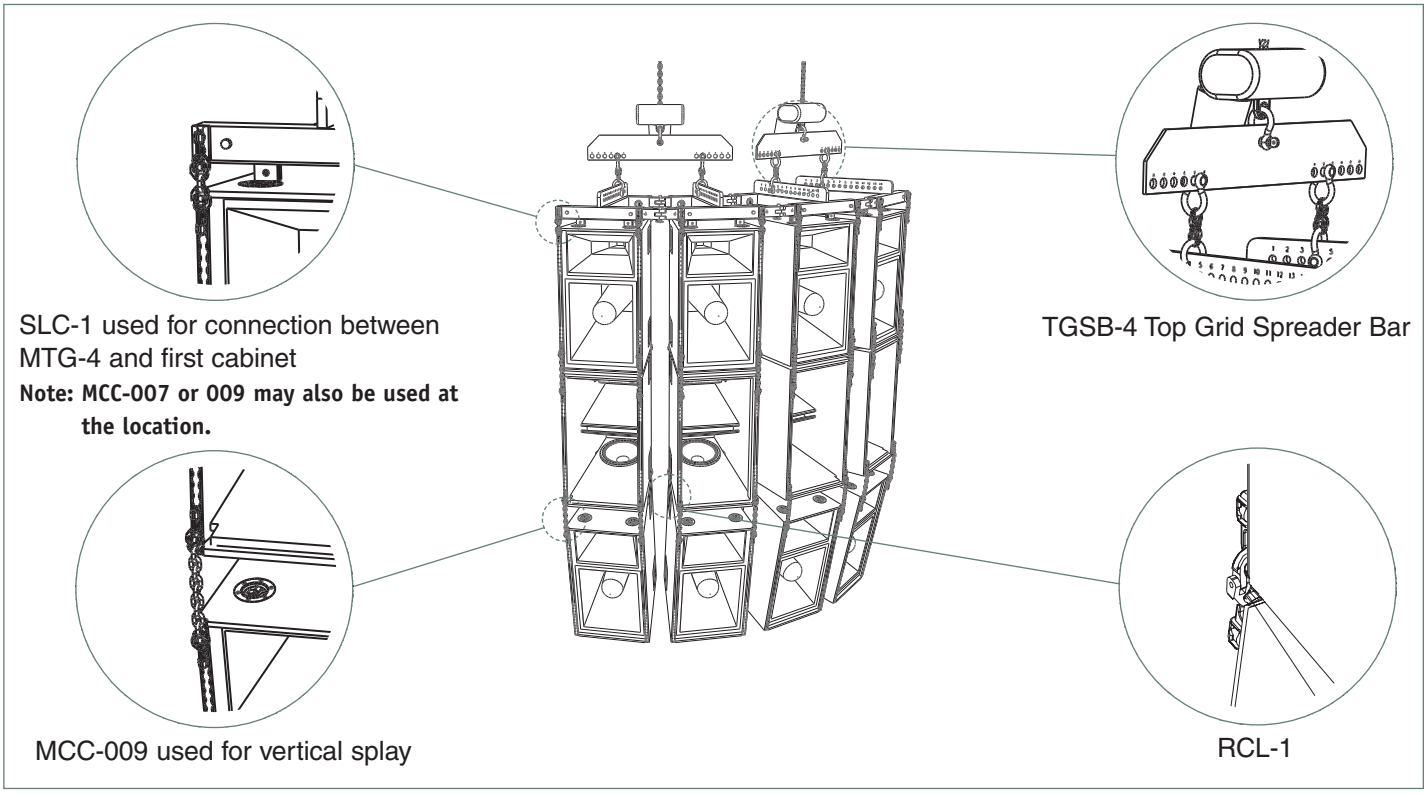

Figure 13

6.4 Ring/Stud Flying Option

Three sets of tabs are provided on each MTG-4 for the purpose of flying a non L-Track-equipped Type 4 cabinet. The tabs use the ring of the ring/stud to fly the cabinet.

Be aware that you must follow the weight limitations of the ring/stud, which are much less than using the L-Track option. Refer to the individual Type 4 loudspeaker's operating instructions for its ring/stud weight limitations before proceeding to use this option.

Fold the loudspeaker's three rings on either the top or bottom of the Type 4 cabinet out and stand the rings straight up, perpendicular to the cabinet. Position the MTG-4 so that the rings are between the MTG-4 tabs. Slide the hitch pin through the ring and both tabs of the MTG-4, then use the hairpin cotter to secure the pin in the safe position.

6.5 The Cabinet's Internal Frame and Structure

All L-Track Type 4 loudspeaker cabinets are designed for flown applications. Internal bracing contained within makes them structurally extremely strong. Ratings for the cabinets fitted with L-Track are detailed in the **Working Load Limits** section on Page 24 of the **Appendix**.

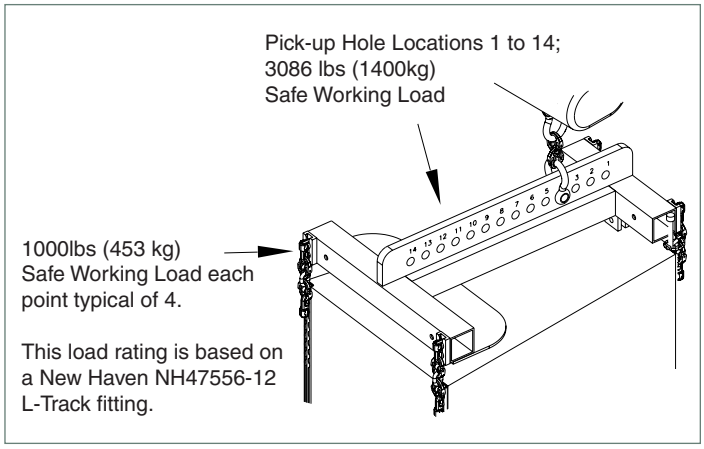

Figure 14

All four connection points must always be used when attaching cabinets together.

6.6 MTG-4 Top Grid and its Attachment to the Rigging Motor

Start with the MTG-4 located on a flat surface. Position the rigging motor point directly above the MTG-4's appropriate pick-up

hole. It is very important to pick up each of the MTG-4s with a direct even straight pull. Any sideways pull from the motor point MUST be avoided. For a guide to choosing the appropriate pick-up hole, see the **MTG-4 L-Track Rigging Grid** section on Page 16 of the **Appendix**.

6.7 Building an Array

The MTG-4 is designed to pick-up the first loudspeaker of a vertical column using the L-Track sections vertically arranged at each corner of the frame. First, raise the MTG-4 to a height above the ground greater than the height of the first Type 4 cabinet to be used in the array. Position the Type 4 cabinet underneath the MTG-4 (on a flat surface or wheel dolly) and, using either Single Link Connecting Chains (SLC-1) or Multilink Connecting Chain (MCC-007/009/015), connect the first cabinet to all four of the MTG-4s L-Track points. Be sure that all four fittings are evenly adjusted in both tracks to ensure that they will be equally stressed when higher loads are applied.

Only one L-Track position may be used when attaching the L-Track fitting to the four corners of the MTG-4. (Please see the Correct Pickup Procedure **on Page 13). Use of other positions will compromise safety.**

Although the first loudspeaker may be adjusted upward or downward for coverage (MCC-007/009/015s will need to be used if vertical splay is desired), the MTG-4 itself must remain horizontal (+/- 2°) once it is fully loaded. For this reason, advance planning and review of sample arrays in the **Appendix** (Pages 16-24) is essential to determine the correct pick-up point.

Once the first loudspeaker is attached, raise it to a height greater than that of the next Type 4 cabinet to be attached. Rear Connection Links (RCL-1) should be used to pick-up the back two points of the cabinet to ensure close rear coupling. MCC-007/009/015 Multilink Connecting Chains are used in the two front L-Tracks.

It is imperative that all four L-Track fittings be used for any cabinet being hung. It is also important that at least two carry equal stress.

Each L-Track location is rated at 973 lbs (442 kg). Each L-Track fitting (New Haven NH47556-12 no ring) is rated at the manufacturer's recommended safe working load. Refer to the **Working Load Limits** section on Page 23 of the **Appendix** for their ratings.

6.8 Correct Pickup Procedure

As previously mentioned, only one L-Track position may be used when attaching the L-Track fitting to the four corners of the MTG-4. The fitting at the end of each connecting chain must be inserted to keep it completely captured within the track.

The only correct MTG-4 attachment position is shown below (Figure 15). Note the ftting is completely captured in the track.

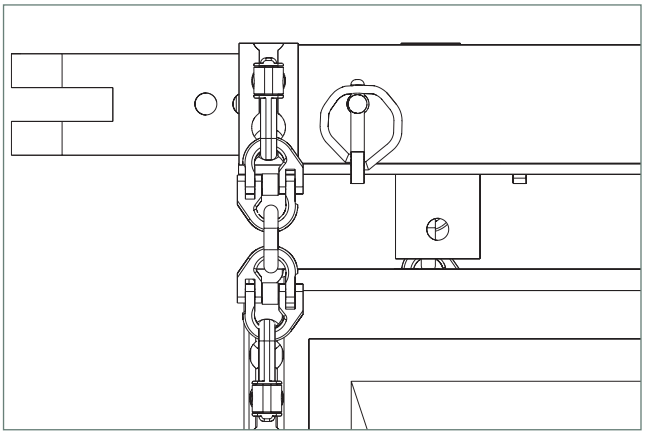

Figure 15 Correct L-Track attachment

The use of any other attachment position will compromise safety. The most common incorrect MTG-4 attachment position is shown below (Figure 16), with the L-Trac fitting inserted into the first L-Track position. Attempting to use the MTG-4 in such a fashion is extremely dangerous.

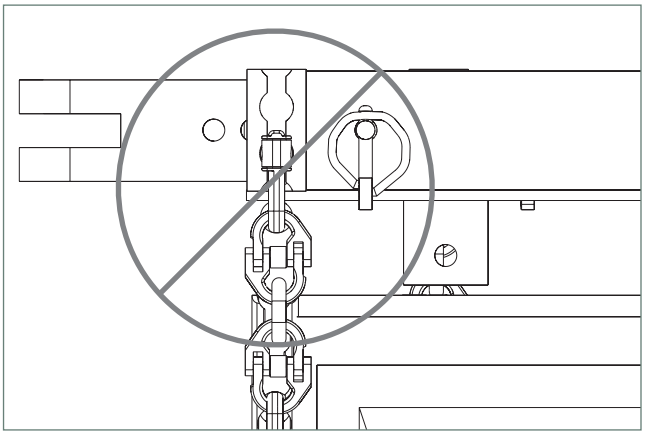

Figure 16 Incorrect L-Track attachment

All fittings must be equally adjusted in all tracks.

7.0 TGSB-4 TOP GRID SPREADER BAR PART NO. 40.031.121.08

7.1 Overview

The TGSB-4 Spreader Bar is used for flying two MTG-4s from a single motor point. Six rigging points are located to the lower left and lower right of the bar. These accomodate all possible inreach and outreach positions of the MTG's arms between two adjacent vertical columns of Type 4 loudspeaker cabinets. The design accommodates a maximum load of 1366 lbs (620 kg) at each of the two points, 2732 lbs (1200 kg) total.

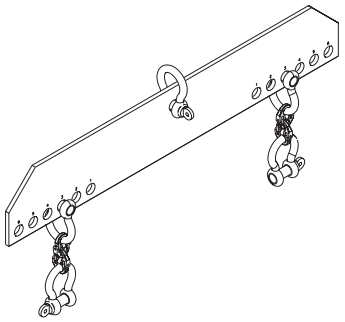

7.2 Kit Contents

1x Steel Pick Up Traverse for Rigging-Top-Grid
5x 5/8" Shackles *(MSPN 124.042)*
4x 8mm Hammerlocks *(MSPN 124.051)*

8.0 RCL-1 REAR CONNECTION LINK PART NO. 40.031.121.04

8.1 Overview

The RCL-1 forms the rear attachment between L-Track equipped cabinets (or those equipped with RFK-1 retrofit frames) and keeps them in alignment when applying vertical splay. For more information on usage, see Page 15.

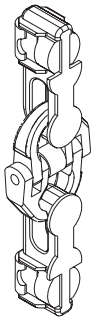

8.2 Kit Contents

2x Black L-Track fittings
1x C&M 7mm Hammerlock

9.0 MCC SERIES FRONT CONNECTING CHAINS PART NO. 40.031.121.05

9.1 Overview

The MCC Series Front Connecting Chains can be used in a variety of ways but are primarily intended for attachment at the front points between L-Track-equipped cabinets (or those equipped with RFK-1 retrofit frames) and allow vertical splay to be applied between them. Three lengths of chains are available. For more information see Page 15.

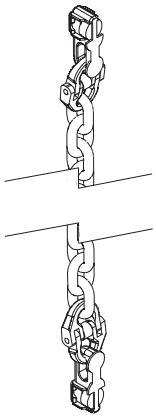

9.2 Kit Contents

1x C&M cut chain 7/9/15 links
MCC-007 *(MSPN 40.031.121.09)*
MCC-009 *(MSPN 40.031.121.05)*
MCC-015 *(MSPN 40.031.121.10)*
2x Black L-Track Fittings
2x C&M 7mm Hammerlock

10.0 SCL-1 SINGLE LINK CONNECTION CHAIN PART NO. 40.031.121.07

10.1 Overview

SCL-1 is used to attach the uppermost loudspeaker in a vertical column to the MTG-4 with no vertical splay. For full information on usage, see Pages 12-13.



10.2 Kit Contents

1x C&M single cut chain link
2x Black L-Track Fittings
2x C&M 7mm Hammerlock

11.0 RFK-1 RETROFIT KIT PART NO. 40.031.121.01

11.1 Overview

The RFK-1 Retrofit Kit allows Type 4 Meyer Sound loudspeaker systems that are not factory equipped with L-Track to be integrated into a QuickFly system. Note that the frame assembly does not attach in any way to the cabinet's D-rings, nut plates, or wooden panels. Proper installation of the retrofit kit insures that all stress is conducted through the L-Track cables used to attach the frames onto the cabinet; no rigging stress whatsoever passes through the cabinet itself. The kit contains two matt black, anodized aluminum frames with Gusset plates and four silver steel wire cables.

When ordering an RFK-1 Retrofit Kit, please specify your loudspeaker model, as the length of the steel cables varies. All RFK-1 retrofit kits fit over painted and carpeted versions of the loudspeaker for which they are designed.

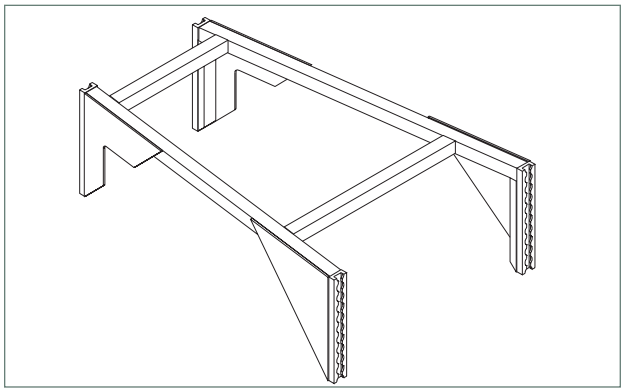

Figure 17 The RFK-1top frame

11.2 Kit Contents

2x Aluminum construction Frames
4x Steel wire each with 2x Ancra
Jungfalk 71137-s L-Track fittings

11.3 To Install

Check all cables and parts before beginning.

Set the loudspeaker in the lower frame and fit the upper frame in place on top of the loudspeaker, as shown (Figure 17a).

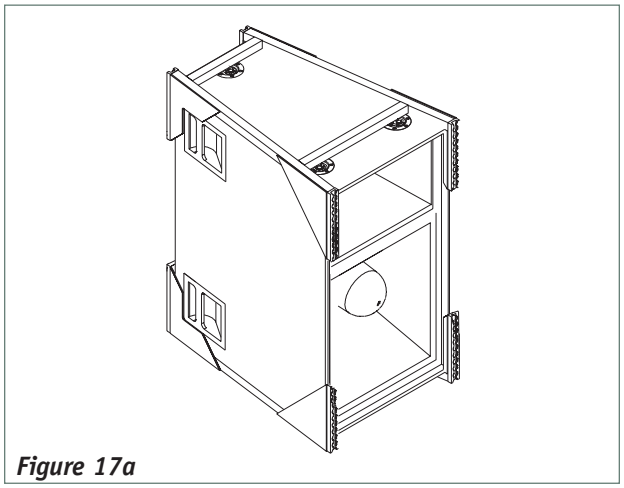

Figure 17a

Fit the L-Track fittings at the end of the cables into the second-from-the-end holes in the track, as shown. (Figures 17b and 17c) The L-Track clips are spring-loaded and must be pulled back slightly before being located. With minimal practice this can be done with one hand.

Note: The second holes in each track must be used. Be sure that the L-Track fitting is completely captured within the track (See Figure 15). All other track holes are available for splaying, tilting, and attaching other cabinets.

Contact Meyer Sound for assistance with your application.

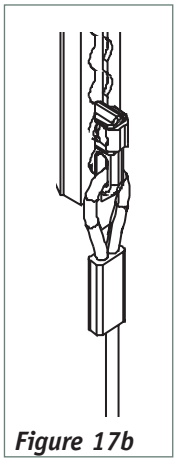

Figure 17b

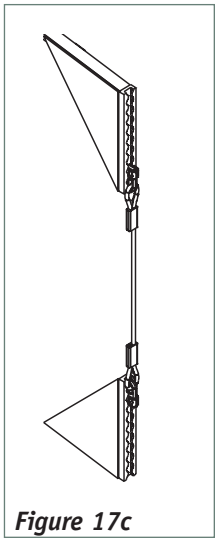

Figure 17c

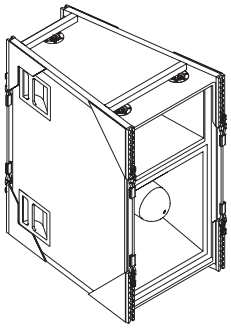

Figure 17d The complete RFK-1 Retrofit Kit

Array Examples of QuickFly Systems:

This section of the **Appendix** provides sample arrays to help you start using the MTG-4 Top Grids with or without the TGSB-4 Spreader Bar(s) as required. Studying these examples will give you with a better understanding of how to determine the best pick-up hole and arm locations when flying a particular array configuration. Also, these examples will assist you in correctly spacing the grid's arms and affecting tilt while keeping the top grid as flat as possible.

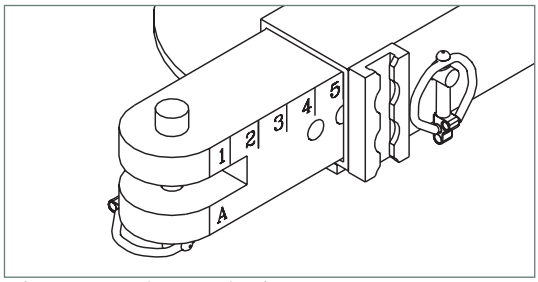

Figure 18 The numbering system on the MTG-4 arms.

MTG-4 L-Track Splay Angle Table

The following is a table of the MTG-4's arm positions that will allow the setting of various splay angles.

Front Arm Positions

Rear Arm Positions

	1	2	3	4	5	6	7	8
1	15	18.75	22.5	26.25	30	NR	NR	NR
2	NR	15	18.75	22.5	26.25	30	NR	NR
3	NR	NR	15	18.75	22.5	26.25	30	NR
4	NR	NR	NR	15	18.75	22.5	26.25	30
5	NR	NR	NR	NR	15	18.75	22.5	26.25

NR = Not recommended for splaying MSL-4 cabinets

Single Column, No Vertical Splay

The following table shows pick-up hole positions for 1 wide columns of 2, 3, 4, 5 and 6 MSL-4 cabinets. Hole positions resulting in 0 degree angle for the top grid are preferred.

1X Wide MSL-4, 0deg offset

Pick-up Hole Pos.	Angle	# High
5	2 ↓	2
6	0	2
7	0	2
8	2 ↑	2
6	0	3
6	0	4
6	0	5
6	0	6

Note: In the following tables, all vertical "down" angles are shown by the symbol ↓, while all vertical "up" angles are represented by the symbol ↑.

The recommended hole position in each of the following examples is represented by a highlighted bar. Using the recommended position will assist in keeping the top grid as flat as possible.

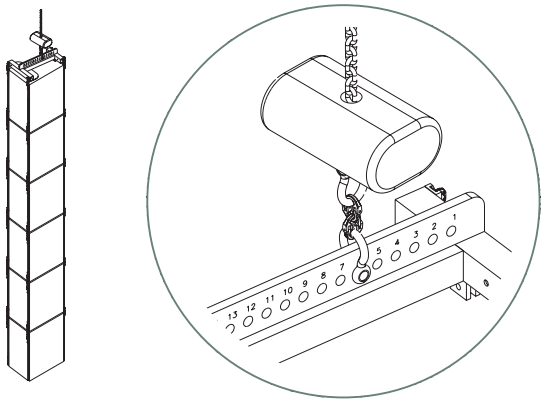

Single Column, Varying Vertical Splay

The following four examples show preferred pick-up hole positions for single columns of MSL-4 cabinets with various amounts of vertical splay. The preferred pick-up hole results in 0 degree tilt of top grid. Table shows actual amount of splay from 0 degrees horizontal of each successive cabinet, top to bottom. IMPORTANT: The 24 degree downward tilt shown in the last example is the maximum allowable without additional support provided byt a tilt motor or a static rigging point, as the front chains start to loosen at this point.

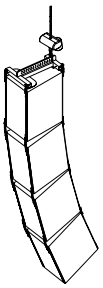

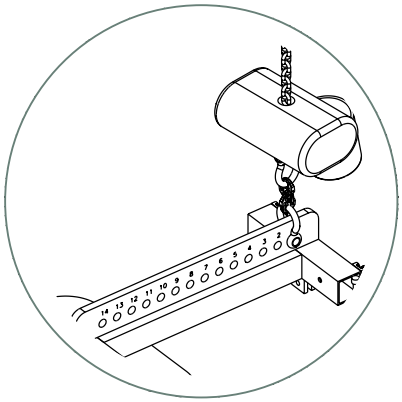

1X Wide, 4 High MSL-4, 8 deg Splay

	Cabinet Top to Bottom			
Pick-up Hole Pos.	1	2	3	4
4	3.5 ↑	4.5 ↓	12 ↓	20 ↓
3	2.5 ↑	5.5 ↓	13.5 ↓	21.5 ↓
2	.5 ↑	7 ↓	14.5 ↓	22.5 ↓
1	0	8 ↓	16 ↓	24 ↓

2x Wide Arrays, No Vertical Splay

The following four examples show preferred pick-up hole positions for 2x wide columns. In all examples, spreader bar front and rear positions are at 1 and 1 for 15 deg horizontal splay. Span indicates the distance between the two pick-up points on adjacent top grids for purposes of setting shackles in the proper holes on the spreader bar.

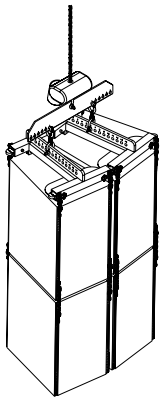

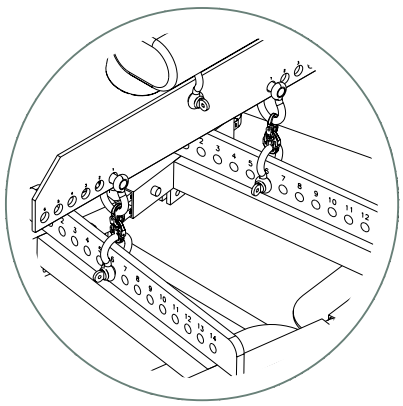

2X Wide, 2 High MSL-4 w/ Spreader Bar
15 Degrees Horizontal Splay (1 and 1)*

Pick-up Hole Pos.	Angle	Span*	Sprdr Pos.
5	NR	460mm	Position 1
6	1↓	470mm	Position 1
7	NR	480mm	Position 1



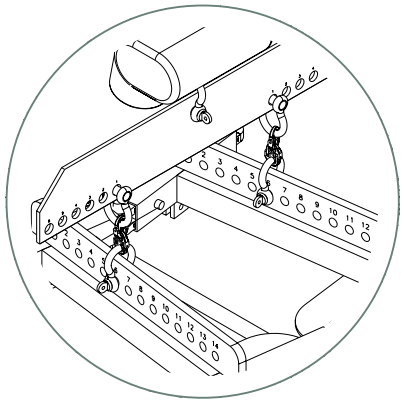

2X Wide, 4 High MSL-4 w/ Spreader Bar
15 Degrees Horizontal Splay (1 and 1)

Pick-up Hole Pos.	Angle	Span*	Sprdr Pos.
5	NR	460mm	Position 1
6	1 ↓	470mm	Position 1
7	NR	480mm	Position 1

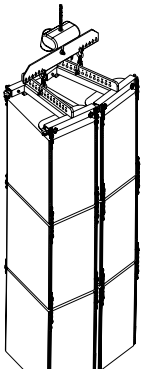

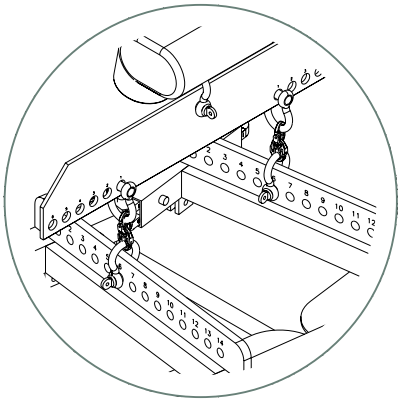

2X Wide, 3 High MSL-4 w/ Spreader Bar
15 Degrees Horizontal Splay (1 and 1)

Pick-up Hole Pos.	Angle	Span*	Sprdr Pos.
5	NR	460mm	Position 1
6	.5 ↓	470mm	Position 1
7		480mm	Position 1

2X Wide, 4 High MSL-4 + 1 row DS-4P w/ spreader bar
15 Degrees Horizontal Splay offset (1 and 1)

Pick-up Hole Pos.	Angle	Span*	Sprdr Pos.
5	NR	460mm	Position 1
6	0 ↓	470mm	Position 1
7	NR	480mm	Position 1

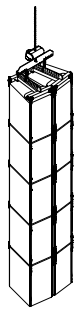

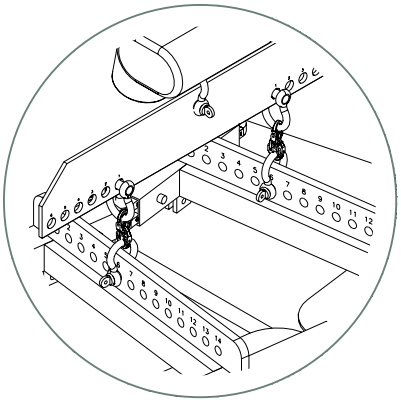

2x Wide Arrays, Varying Vertical Splay

The following two examples show preferred pick-up holes and grid arm positions for introducing vertical splay on lower cabinets. Note that, in the first example, all the pick-up holes given result in the preferred 0 degree tilt of cabinet 1; the variations shown are in the amount of vertical splay of cabinets 2 and 3.

2X Wide, 3 High MSL-4 w/ Spreader Bar
22.5 splay (Grid arm pos. 4 Rear, 6 Frnt)

	Cabinet Top to Bottom			
Pick-up Hole Pos.	1	2	3	Notes
4	0	8 ↓	16 ↓	
6	0	0	8 ↓	
5	0	0	20 ↓	50mm OS
6	0	0	10 ↓	
3	0	10 ↓	20 ↓	Backs touch

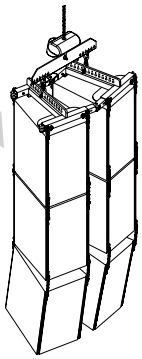

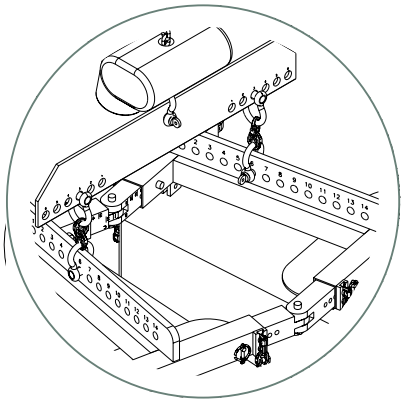

2X Wide, 3 High MSL-4 w/ Spreader Bar
22.5 splay (Grid arm pos. 3 Rear, 5 Frnt)

	Cabinet Top to Bottom			
Pick-up Hole Pos.	1	2	3	Notes
5	0	0	20 ↓	Backs touch

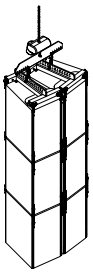

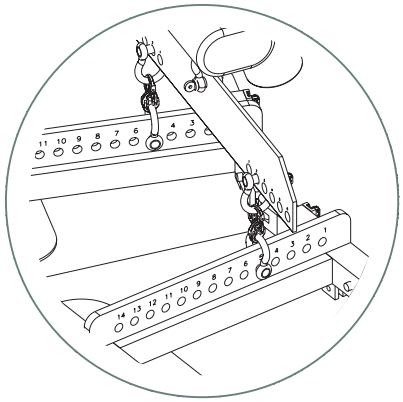

Single Column, Varying Vertical Splay

The following table shows pick-up hole positions for 1 wide columns of 2, 3, 4, 5 and 6 MSL-4 cabinets. Hole positions resulting in 0 degree angle for the top grid are preferred.

1X Wide, 4 High MSL-4 Vertical Angles, 4deg Vert Splay

	Cabinet Top to Bottom			
Pick-up Hole Pos.	1	2	3	4
8	5 ↑	1.5 ↑	2.5 ↓	6.5 ↓
7	4.5 ↑	.5 ↑	3.5 ↓	8 ↓
6	3 ↑	1 ↓	5 ↓	9 ↓
5	1.5 ↑	2 ↓	6.5 ↓	10.5 ↓
4	0	4 ↓	8 ↓	12 ↓



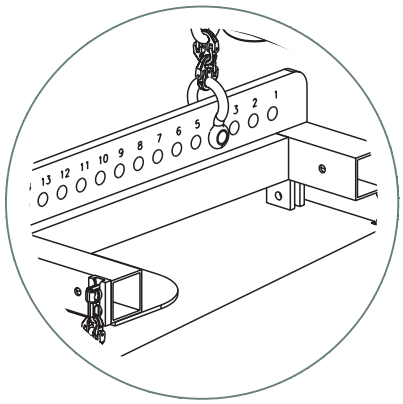

1 x Wide, 6 High MSL-4, Variable Splay

Cabinet Top to Bottom

Pick-up Hole Pos.	1	2	3	4	5	6	Vert Splay
5	0	0	0	0	14 ↓	28 ↓	14 OS
5	1 ↑	1 ↑	1 ↑	5 ↓	11 ↓	17 ↓	6 OS
5	2 ↑	2 ↑	2 ↑	6 ↓	14 ↓	22 ↓	8 OS
3	0	0	0	8	16	24	8 OS

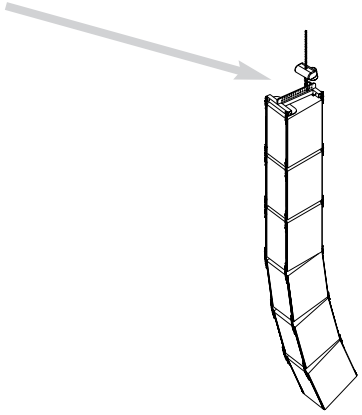

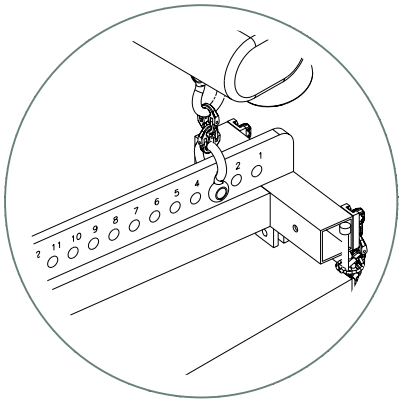

1 x Wide, 5 High MSL-4 Vertical Angles, 8deg Splay

Cabinet Top to Bottom

Pick-up Hole Pos.	1	2	3	4	5
2	0	0	8	16	24

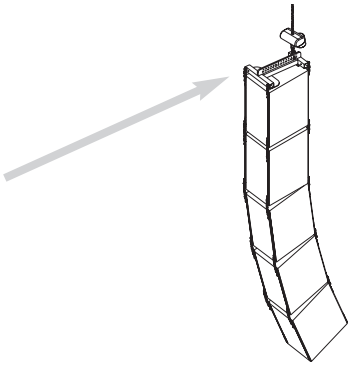

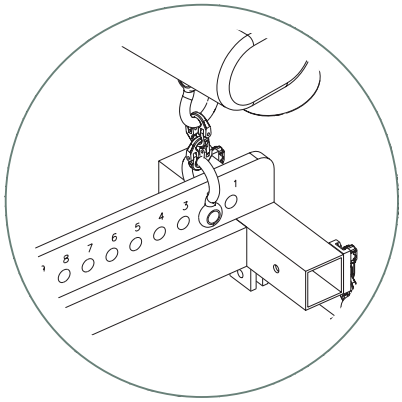

1 x Wide, 5 High MSL-4 Vertical Angles, 10deg Splay

Cabinet Top to Bottom

Pick-up Hole Pos.	1	2	3	4	5	Note
6	5 ↑	5 ↑	5 ↓	15 ↓	25 ↓	
3	0	0	8 ↓	16 ↓	26 ↓	Front chains loose

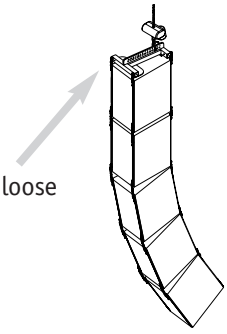

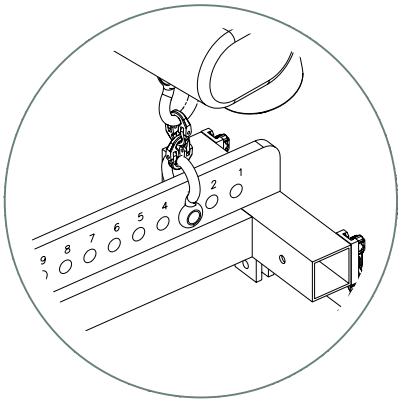

2 High MSL-6s, 0deg Vert Splay

Pick-up Hole	Angle
2	-6.8
2 & 3	-4.5
2 & 4	-3.5
3	-2.8
4	-0.6
5	1.3
6	3.4
7	5.7

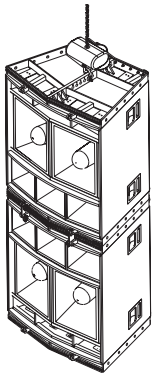

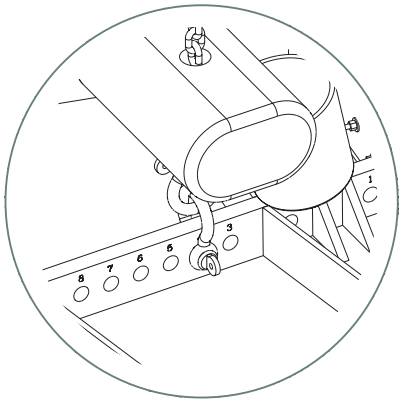

2 High MSL-6s, 4deg Vert Splay

Pick-up Hole	1st Cabinet	2nd Cabinet
3	-2.2	-6.2
4	0	-4
5	2.3	-1.7
6	4.5	0.5
7	6.7	2.7
8	8.7	4.7

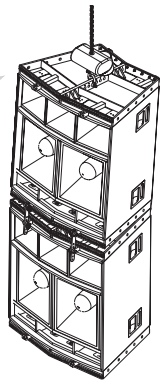

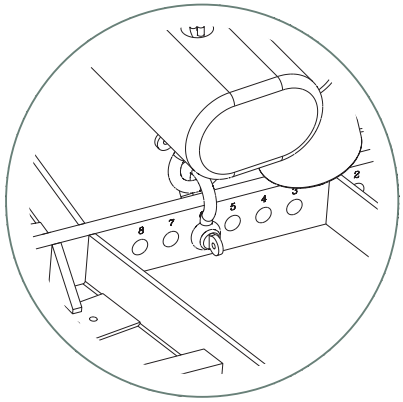

2 High MSL-6s, 8deg Vert Splay

Pick-up Hole	1st Cabinet	2nd Cabinet
2	-5.2	-13.2
3	-1.2	-9.2
4	1	-7
5	3.2	-4.8
6	5.2	-2.8

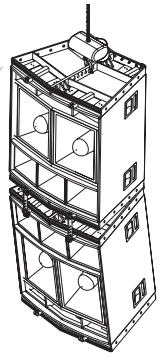

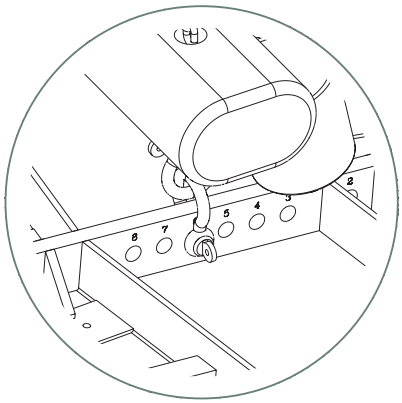

3 High MSL-6s, 0deg Vert Splay

Pick-up Hole	Tilt
2	-5
3	-2.3
4	-0.8
5	0.4
6	2.2

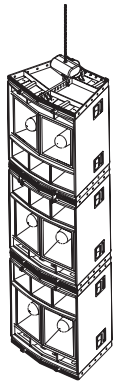

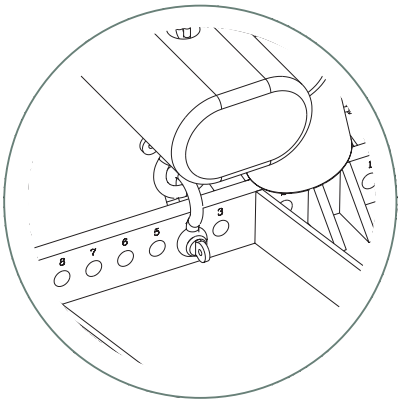

3 High MSL-6s, 4deg Vert splay bottom cabinet

Pick-up Hole	1st Cabinet	2nd Cabinet	3rd Cabinet
2	-4.7	-4.7	-8.7
3	-1.8	-1.8	-5.8
4	-0.3	-0.3	-4.3
5	1.2	1.2	-2.8
6	2.8	2.8	-1.2

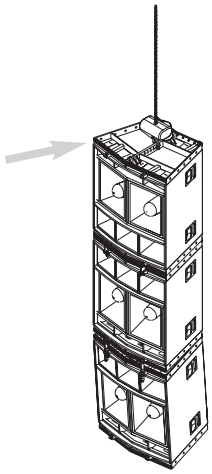

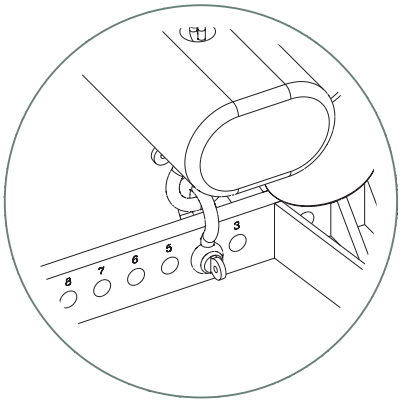

3 High MSL-6s, 8deg Vert splay bottom cabinet

Pick-up Hole	1st Cabinet	2nd Cabinet	3rd Cabinet
3	-1.4	-1.4	-9.4
4	0	0	-8
5	1.8	1.8	-6.2
6	3	3	-5

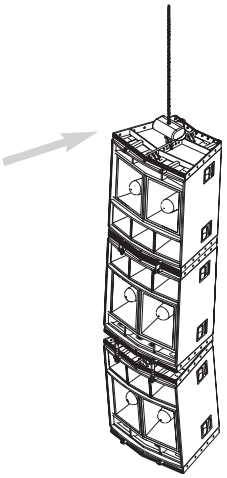

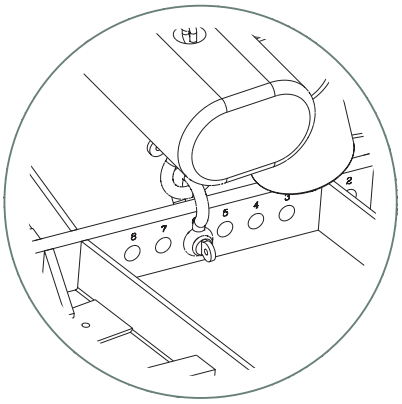

3 Wide MSL-6s with two rows of MSL-4s

Hole Pos.	MSL-6s	1st Row 4s	2nd Row 4s
4	1.2	-5.5	-9
3	0.4		
2	-1.9		

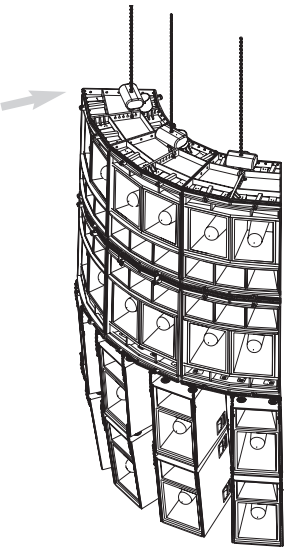

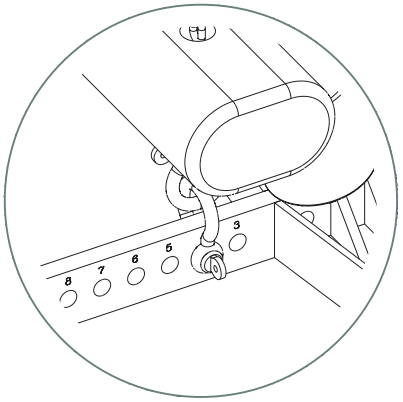

1 MSL-6 with only 1 MRF-6 attached on top

Hole Pos.	Tilt
3	-6.2
4	-1.1
5	3.7
6	8.4

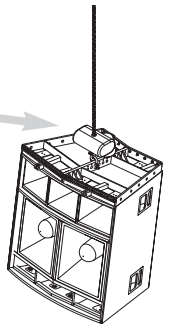

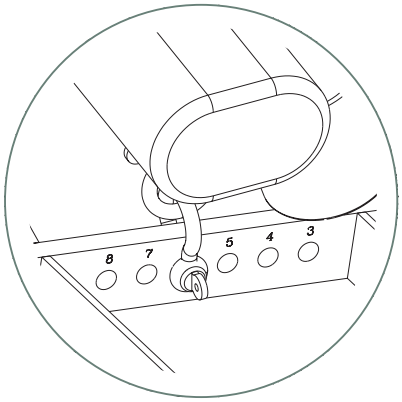

1 MSL-6 with both MRF-6 frames

Hole Pos.	Tilt
3	-6.2
4	-1.8
5	2.4
6	6.7

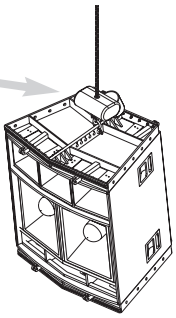

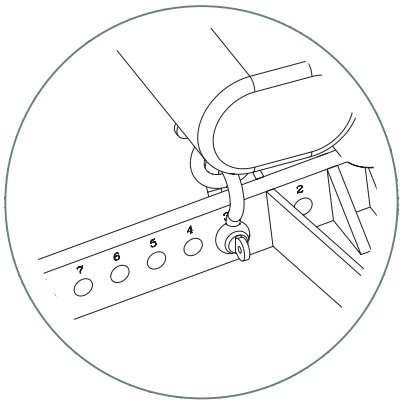

Care, Use, and Inspection of Connectors

The physical integrity of Meyer Sound's QuickFly system depends on proper inspection, maintenance, and use. For additional information, refer to ANSI B30.9, OSHA 1910.184, or appropriate documents from your local regulatory body.

Care

Connectors and chains used in the QuickFly system require careful storage and regular maintenance.

- Store in a clean, dry place.
- To avoid corrosion, oil before prolonged storage.
- Do not heat the connectors; this will alter the thermal treatment.
- Do not plate or change surface finish.

Use

To protect both operators and system components, observe these precautions :

- Before use, inspect the chain and all attachments following the instructions detailed in **Inspection**.
- Do not exceed the working load limit. Any of the factors listed here can reduce the working load:
  - Acceleration in rate of lifting arrays can produce dangerous overloading.
  - Variation in the angle of the load: as the angle decreases, the working load presented to the connector will increase.
  - Twisting , knotting , or kinking subjects connector links to unusual loading and decreases the effective working load.
  - Use for purposes other than those for which the product is intended can reduce the effective working load.
- Free the chain of all twists, knots, and kinks.
- Center load in the hook(s); hook latches must not support the load.
- Avoid sudden jerks when lifting and lowering
- Balance all loads; avoid tipping of loads.
- Use pads around sharp corners.
- Do not drop loudspeakers on chains or connectors.

Inspection

Inspect connectors and chain links regularly and keep a record of all chain inspections.

- Before inspecting, clean with a non-acid/non-caustic solvent so that marks, nicks, wear, and other defects are visible.
- Inspect each link and connector part for:
  - Twists or bends.
  - Nicks or gouges.
  - Excessive wear at bearing points.
  - Stretch.
  - Distorted or damaged master links, coupling links or attachments, especially spread in the throat openings of hooks.
- Use paint to plainly mark each link or attachment showing any conditions listed here to indicate rejection; remove from service until properly repaired.

Working Load Limits

A loudspeaker cabinet fitted in the factory with L-Track rigging weighs an average of 20 lbs (9.1 kg) more than the same unit not so equipped. The **maximum recommended load** for an L-Track-equipped unit **at vertical pull using any 2 points is 1500 lbs (682 kg)**. All four rigging points per end must be used. This *working load* is based on a 5:1 safety factor[1].

Adding L-Track hardware to a cabinet provides eight points of rigging attachment (four on the top and four on the bottom of each cabinet); the maximum working load of each individual point is dependent on the direction in which the cabinet is being pulled at that point. the figure below shows the working loads for each point as they vary depending on cabinet pull angle.



When flying any units using the QuickFly system, it is absolutely imperative that you do not exceed either the maximum recommended working load for an entire cabinet **or** the working load of any individual rigging point.

All working load limit ratings assume the cabinet, fittings, and L-Track are in new condition. If not, the load ratings can be reduced significantly. It is important to inspect the rigging hardware regularly and replace worn or damaged components immediately.

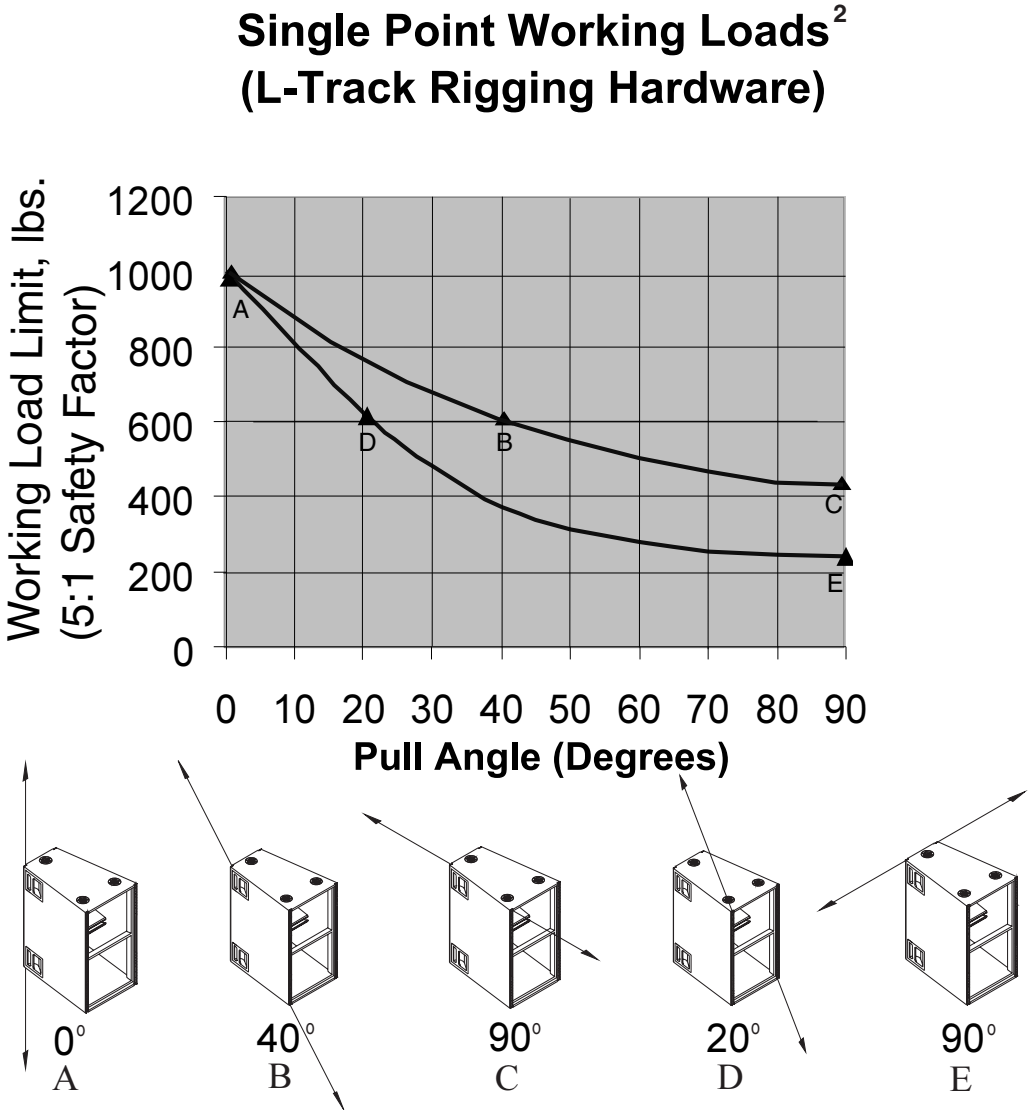

1. Depending upon your geographic location a different safety factor may be required. All Meyer Sound products must be used in accordance with local, state, federal, and industry regulations. It is the owner's and/or user's responsibility to adhere to local regulations and evaluate the reliability of any rigging method for their application. Rigging should be carried out only by experienced professionals.
2. Results from tests of the L-Track rigging system using the New Haven Part #NH47556-12.



CONTACT INFORMATION

Meyer Sound Laboratories, Inc.
2832 San Pablo Avenue
Berkeley, CA 94702
tel: 510.486.1166
fax: 510.486.8356
e-mail: techsupport@meyersound.com
http: www.meyersound.com

Part Number 05.053.055.01 Rev A