MYA-SB2, HAK-SB2 and VAK-SB2 Multipurpose Yoke Assembly Guide and Load Ratings

MYA-SB2 Multipurpose Yoke Assembly

This guide provides assembly instructions for the MYA-SB2 Multipurpose Yoke Kit. The MYA SB2 is designed for mounting or flying a single SB-2 in the most common applications. The Vertical Links are included for applications where you may be flying a yoke from motor hoists or cables. These Vertical Links are also required when using the VAK-SB2 Vertical Array Kit as shown on page 3 of this document.

STRAIGHT PULL ATTACHMENT VERTICAL LOAD RATING:	
5:1	7:1
5600 lbs 2540 kg 14 SB-2s	4000 lbs 1814 kg 10 SB-2s

BRIDLE ATTACHMENT VERTICAL LOAD RATING: NO MORE THAN 1 SB-2

40.108.025.01 - MYA-SB2 Multipurpose Yoke Assembly Contents

Item	Qty	M.S. Part Number	Description
A	1	61.108.025.01	SB-2 Yoke Assembly
B	2	61.108.032.01	Vertical Links
C	6	102.660	Coated Screw, Hex Head, .5"-13 x 1.75
D	6	110.037	Coated Nut, Hex nylon locking, .5"-13
E	12	113.531	Washer, Flat .5" Stainless Steel

-

Caution: *When flying a single or multiple MYA-SB2s, each and every vertical link must be supported by a rigging point.*

When suspending SB-2s, attach the Vertical Links using the hardware provided facing the bevelled edges of the Links inward.

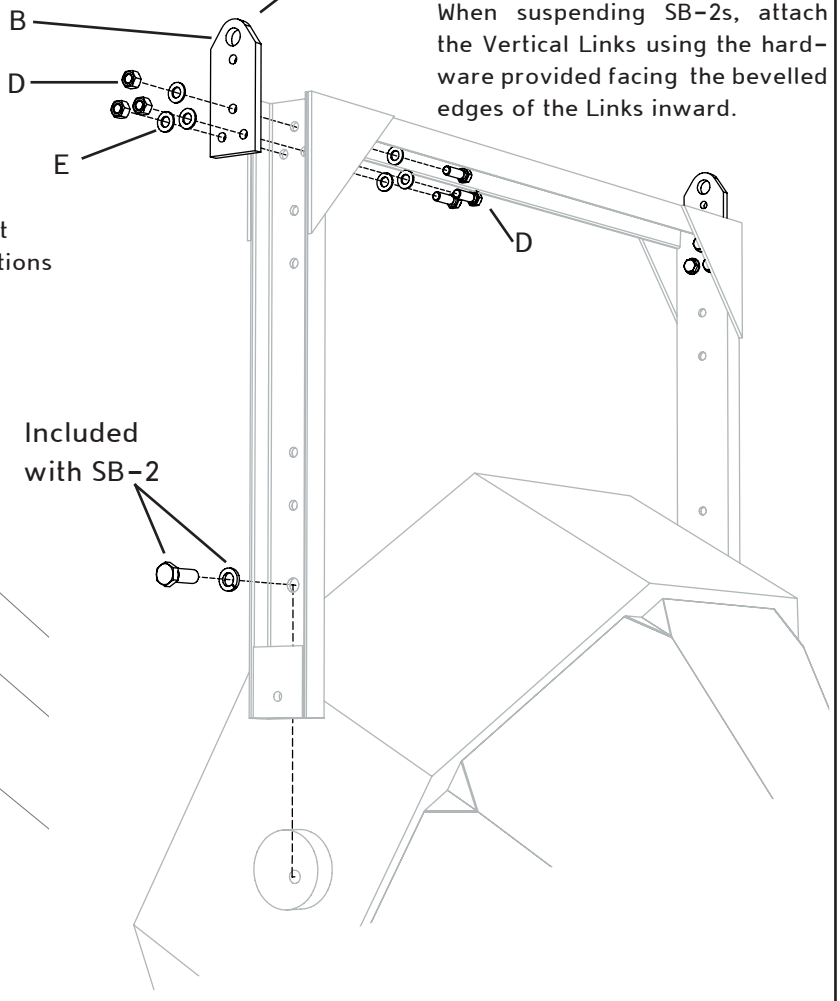

When mounting the MYA-SB-2 on a beam or flat surface, use rated hardware as required in locations shown. (not included)

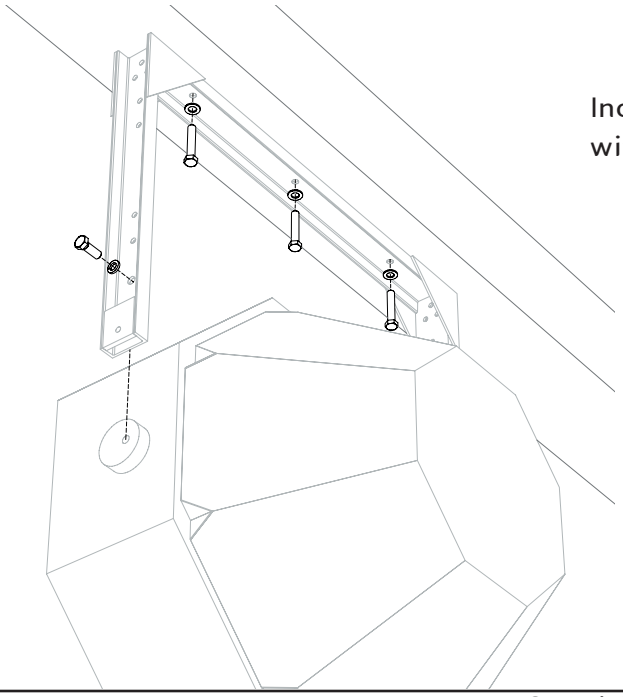

Copyright © 2002 Meyer Sound Laboratories, Inc. All Rights Reserved

MYA-SB2, HAK-SB2 and VAK-SB2 Multipurpose Yoke Assembly Guide and Load Ratings

HAK-SB2 Horizontal Array Kit *(optional)*

The HAK-SB2 Horizontal Array Kit adds 4 brackets to the sides of a single yoke. These brackets will hold multiple yokes in either a 15 or 20 degree splay angle, or in a straight row. Once attached, the yokes can be quickly pinned together for touring applications or temporary installations.

40.108.026.02 – HAK-SB2 Horizontal Array Kit Contents

Item	Qty	M.S. Part Number	Description
A	1	61.108.028.01	Upper Right Horizontal Array Kit Bracket
B	1	61.108.029.01	Lower Right Horizontal Array Kit Bracket
C	1	61.108.030.01	Lower Left Horizontal Array Kit Bracket
D	1	61.108.031.01	Upper Left Horizontal Array Kit Bracket
E	8	102.660	Coated Screw, Hex Head, .5"-13 x 1.75
F	8	110.037	Coated Nut, Hex nylon locking, .5"-13
G	16	113.531	Washer, Flat .5" Stainless Steel
I	2	134.020	Quick Release Pin, .31" x 1.25"
J	2	134.007	Quick Release Pin, .5" x 2.5"

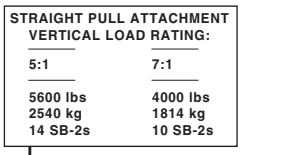

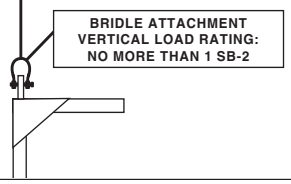

Caution: *When flying a single or multiple MYA-SB2s, each and every vertical link must be supported by a rigging point.*

Note: The Multipurpose Yoke itself is symmetrical, and does not have a front or back orientation until the horizontal array kit's brackets are attached.

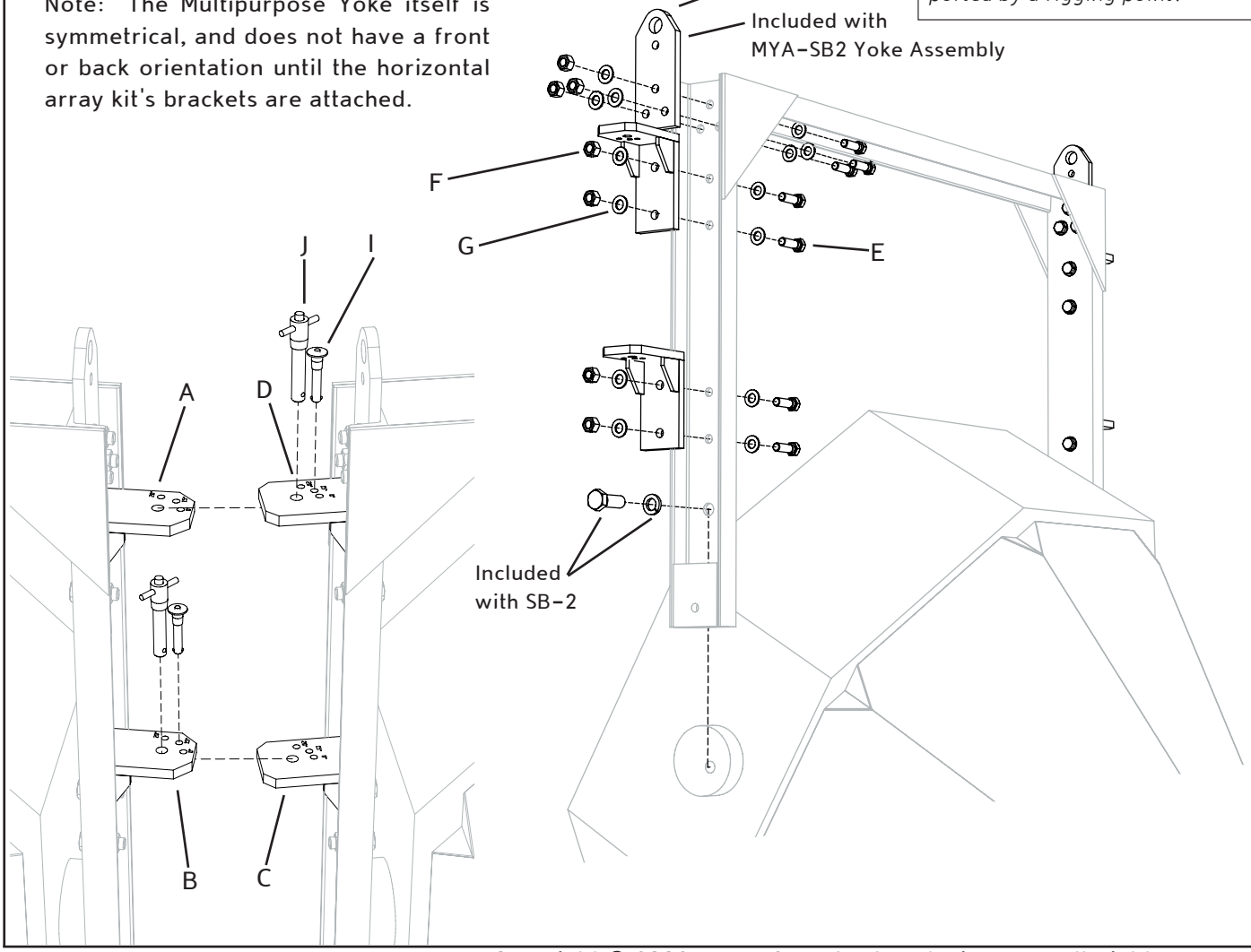

Copyright © 2002 Meyer Sound Laboratories, Inc. All Rights Reserved

MYA-SB2, HAK-SB2 and VAK-SB2
Multipurpose Yoke
Assembly Guide and Load Ratings

VAK-SB2 Vertical Array Kit *(optional)*

The VAK SB2 Vertical Array Kit provides two vertical extension brackets for arraying up to 14 (10 at 7:1) SB-2's into a straight column. The yokes can be quickly pinned together for touring or temporary installations.

40.108.026.01 - VAK-SB2 Vertical Array Kit Contents

Item	Qty	M.S. Part Number	Description
A	2	61.108.026.01	SB-2 Vertical Extender
B	4	134.007	Quick Release Pin, .5" x 2.5"

STRAIGHT PULL ATTACHMENT VERTICAL LOAD RATING:	
5:1	7:1
5600 lbs 2540 kg 14 SB-2s	4000 lbs 1814 kg 10 SB-2s

BRIDLE ATTACHMENT
VERTICAL LOAD RATING:
NO MORE THAN 1 SB-2

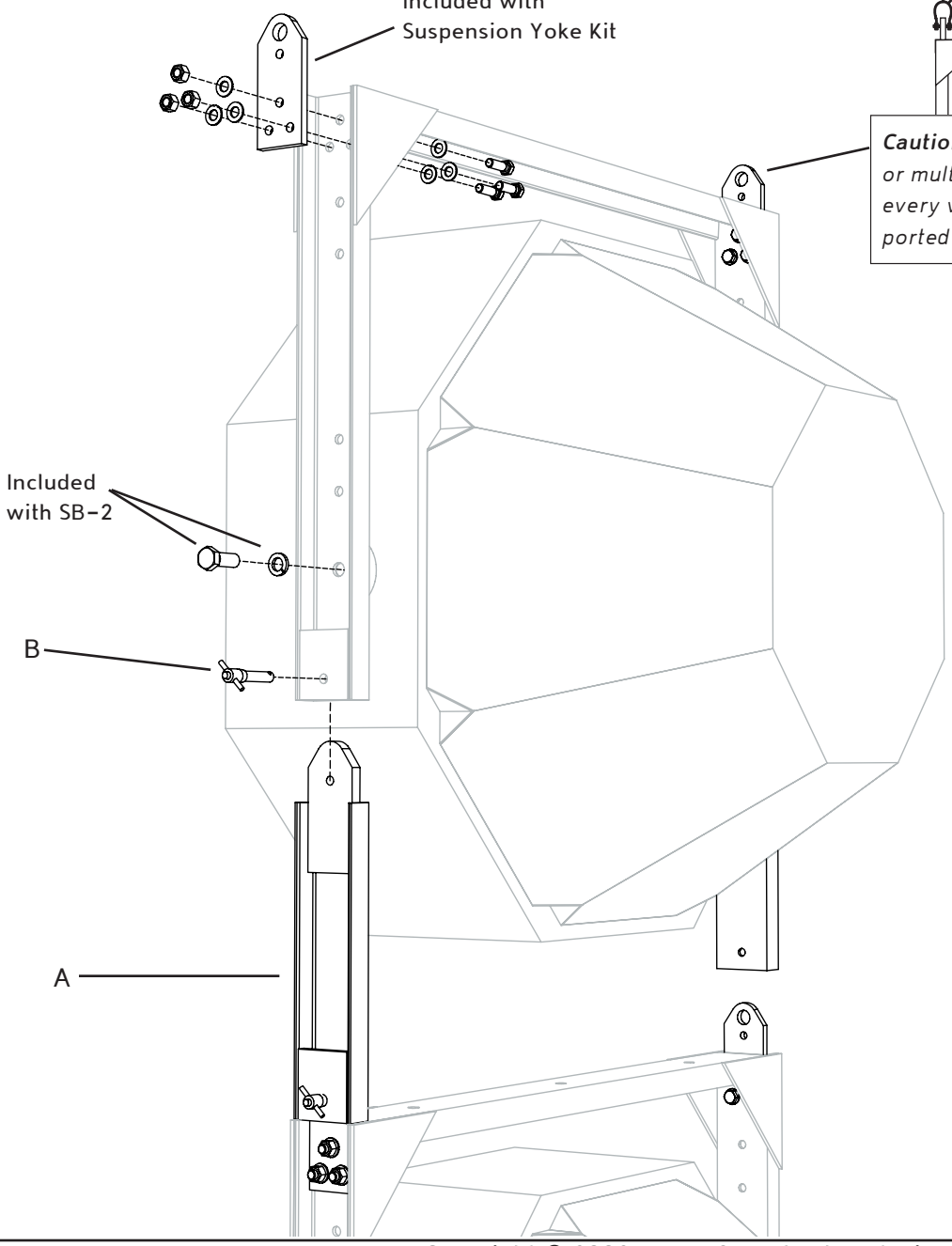

Caution: *When flying a single or multiple MYA-SB2s, each and every vertical link must be supported by a rigging point.*

Meyer Sound Laboratories, Inc.
2832 San Pablo Avenue
Berkeley, California 94702
T: +1 510 486.1166
F: +1 510 486.8356
www.meyersound.com

Copyright © 2002 Meyer Sound Laboratories, Inc. All Rights Reserved