MM-4 Miniature Wide-Range Loudspeaker
MM-4CEU Control Electronics Unit

thinking sound Meyer® Sound



Keep these important operating instructions.
Check www.meyersound.com for updates.

DECLARATION OF CONFORMITY ACCORDING TO ISO/IEC GUIDE 22 AND EN 45014

Manufacturer's Name:
Meyer Sound Laboratories Inc.

Manufacturer's Address:
2832 San Pablo Avenue
Berkeley, California 94702-2204, USA

declares that the product
Product Name: MM-4CEU
Product Options: All

conforms to the following Product Specifications
Safety: EN 60065: 2002
EMC: EN55103-1: 1997 emission[1]
EN55103-2: 1997 immunity[2]

This device also complies with EN 55103-1 & -2.
Operation is subject to the following two conditions:
(1) this device may not cause harmful interference, and
(2) this device must accept any interference received, including interference that may cause undesired operation.

Supplementary Information

The product herewith complies with the requirements of the Low Voltage Directive 73/23/EEC and the EMC Directive 89/336/EEC.

Office of Quality Manager
Berkeley, California USA
March 27, 2003

European Contact: Your local Meyer Sound dealer or Meyer Sound Germany, GmbH.

Environmental specifications for Meyer Sound Electronics products

Operating Temperature:	0˚ C to + 45˚ C
Nonoperating Temperature:	<-40˚ C or > +75˚ C
Humidity:	to 95% at 35˚C
Operating Altitude:	to 4600 m (15,000 ft)
Nonoperating Altitude:	to 6300 m (25,000 ft)
Shock:	30g 11 msec half-sine on each of 6 sides
Vibration:	10 Hz to 55 Hz (0.010 m peak-to-peak excursion)

CE
www.meyersound.com
Made in USA with domestic and foreign parts

3K59 OR 3JKB
COMMERCIAL AUDIO SYSTEM
c UL US LISTED
MM-4CEU

N775
MM-4CEU

SIGNALING
c UL US
LISTED
LISTED
SPEAKER
45JC

UL Listed Loudspeakers for Fire-protective Signaling Systems:
- Model MM-4 EN3, suitable for indoor/outdoor/wet use.

UL Listed General Signaling Equipment:
- Model MM-4 Phoenix, suitable for indoor/dry use and for use in air handling and plenum spaces.
- Model MM-4 EN3, suitable for outdoor/wet use and for use in air handling and plenum spaces.

® Copyright 2010 Meyer Sound. All rights reserved.

Meyer Sound MM-4/MM-4CEU Operating Instructions.

The contents of this manual are furnished for informational purposes only, are subject to change without notice, and should not be construed as a commitment by Meyer Sound Laboratories Inc. Meyer Sound assumes no responsibility or liability for any errors or inaccuracies that may appear in this manual.

Except as permitted by applicable copyright law, no part of this publication may be reproduced, stored in a retrieval system, or transmitted, in any form or by any means, electronic, mechanical, recording or otherwise, without prior written permission from Meyer Sound.

SpeakerSense, MultiSense, MAPP Online Pro, and all alphanumeric product names are trademarks of Meyer Sound. Meyer Sound and SIM are registered trademarks of Meyer Sound. All third-party trademarks mentioned herein are the property of their respective trademark holders.

Printed in the U.S.A.

Part Number: 05.091.012.01 Rev. F2

SYMBOLS USED

These symbols indicate important safety or operating features in this booklet and on the chassis:

		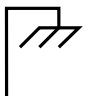	
Dangerous voltages: risk of electric shock	Important operating instructions	Frame or chassis	Protective earth ground
Pour indiquer les risques résultant de tensions dangereuses	Pour indequer important instructions	Masse, châssis	Terre de protection
Zu die gefahren von gefährliche spanning zeigen	Zu wichtige betriebs-anweisung und unter-haltsanweisung zeigen	Rahmen oder chassis	Die schutzerde
Para indicar voltajes peligrosos.	Instrucciones importantes de funcionamiento y/o manteniento	Armadura o chassis	Tierra proteccionista

IMPORTANT SAFETY INSTRUCTIONS

1. Read these instructions.
2. Keep these instructions.
3. Heed all warnings.
4. Follow all instructions.
5. Do not use this loudspeaker near water.
6. Clean only with dry cloth.
7. Do not block any ventilation openings. Install in accordance with Meyer Sound's installation instructions.
8. Do not install near any heat sources such as radiators, heat registers, stoves, or other apparatus that produce heat.
9. Do not defeat the safety purpose of the grounding-type plug. A grounding-type plug has two blades and a third grounding prong. The third prong is provided for your safety. If the provided plug does not fit into your outlet, consult an electrician for replacement of the obsolete outlet.
10. Protect the power cord from being walked on or pinched, particularly at plugs, convenience receptacles, and the point where they exit from the loudspeaker. The AC mains plug or appliance coupler shall remain readily accessible for operation.
11. Only use attachments/accessories specified by Meyer Sound.
12. Use only with the caster rails or rigging specified by Meyer Sound, or sold with the loudspeaker. Handles are for carrying only.
13. Unplug this loudspeaker during lightning storms or when unused for long periods of time.
14. Refer all servicing to qualified service personnel. Servicing is required when the loudspeaker has been damaged in any way, such as when the power-supply cord or plug has been damaged; liquid has been spilled or objects have fallen into the loudspeaker; rain or moisture has entered the loudspeaker; the loudspeaker has been dropped; or, when for undetermined reasons, the loudspeaker does not operate normally.



CAUTION: To reduce the risk of electric shock, do not expose this loudspeaker to rain or moisture. Do not install the loudspeaker in wet or humid locations without using weather protection equipment from Meyer Sound.

SAFETY SUMMARY

English

- To reduce the risk of electric shock, disconnect the loudspeaker from the AC mains before installing audio cable. Reconnect the power cord only after making all signal connections.
- Connect the loudspeaker to a two-pole, three-wire grounding mains receptacle. The receptacle must be connected to a fuse or circuit breaker. Connection to any other type of receptacle poses a shock hazard and may violate local electrical codes.
- Do not install the loudspeaker in wet or humid locations without using weather protection equipment from Meyer Sound.
- Do not allow water or any foreign object to get inside the loudspeaker. Do not put objects containing liquid on or near the unit.
- To reduce the risk of overheating the loudspeaker, avoid exposing it to direct sunlight. Do not install the unit near heat-emitting appliances, such as a room heater or stove.
- This loudspeaker contains potentially hazardous voltages. Do not attempt to disassemble the unit. The unit contains no user-serviceable parts. Repairs should be performed only by factory-trained service personnel.

Français

- Pour réduire le risque d'électrocution, débrancher la prise principale de l'haut-parleur, avant d'installer le câble d'interface allant à l'audio. Ne rebrancher le bloc d'alimentation qu'après avoir effectué toutes les connections.
- Branchez l'haut-parleur dans une prise de courant à 3 dérivations (deux pôles et la terre). Cette prise doit être munie d'une protection adéquate (fusible ou coupe-circuit). Le branchement dans tout autre genre de prise pourrait entraîner un risque d'électrocution et peut constituer une infraction à la réglementation locale concernant les installations électriques.
- Ne pas installer l'haut-parleur dans un endroit où il y a de l'eau ou une humidité excessive.
- Ne pas laisser de l'eau ou tout objet pénétrer dans l'haut-parleur. Ne pas placer de r´cipients contenant un liquide sur cet appareil, ni à proximité de celui-ci.
- Pour éviter une surchauffe de l'haut-parleur, conserver-la à l'abri du soleil. Ne pas installer à proximité d'appareils dégageant de la chaleur tels que radiateurs ou appareils de chauffage.
- Ce haut-parleur contient des circuits haute tension présentant un danger. Ne jamais essayer de le démonter. Il n'y a aucun composant qui puisse être réparé par l'utilisateur. Toutes les réparations doivent être effectuées par du personnel qualifié et agréé par le constructeur.

Deutsch

- Um die Gefahr eines elektrischen Schlages auf ein Minimum zu reduzieren, den Lautsprecher vom Stromnetz trennen, bevor ggf. ein Audio-Schnittstellensign alkabel angeschlossen wird. Das Netzkabel erst nach Herstellung aller Signalverbindungen wieder einstecken.
- Der Lautsprecher an eine geerdete zweipolige Dreiphasen-Netzsteckdose anschließen. Die Steckdose muß mit einem geeigneten Abzweigschutz (Sicherung oder Leistungsschalter) verbunden sein. Der Anschluß der unterbrechungsfreien Stromversorgung an einen anderen Steckdosentyp kann zu Stromschlägen führen und gegen die örtlichen Vorschriften verstoßen.
- Der Lautsprecher nicht an einem Ort aufstellen, an dem sie mit Wasser oder übermäßig hoher Luftfeuchtigkeit in Berührung kommen könnte.
- Darauf achten, daß weder Wasser noch Fremdkörper in das Innere den Lautsprecher eindringen. Keine Objekte, die Flüssigkeit enthalten, auf oder neben die unterbrechungsfreie Stromversorgung stellen.
- Um ein Überhitzen dem Lautsprecher zu verhindern, das Gerät vor direkter Sonneneinstrahlung fernhalten und nicht in der Nähe von wärmeabstrahlenden Haushaltsgeräten (z.B. Heizgerät oder Herd) aufstellen.
- Im Inneren diesem Lautsprecher herr-schen potentiell gefährliche Spannungen. Nicht versuchen, das Gerät zu öffnen. Es enthält keine vom Benutzer reparierbaren Teile. Reparaturen dürfen nur von ausgebildetem Kundenienstpersonal durchgeführt werden.

Español

- Para reducir el riesgo de descarga eléctrica, desconecte de la red de voltaje el altoparlante antes de instalar el cable de señal de audio. Vuelva a conectar la alimentacion de voltaje una vez efectuadas todas las interconexiones de señalizacion de audio.
- Conecte el altoparlante a un tomacorriente bipolar y trifilar con neutro de puesta a tierra. El tomacorriente debe estar conectado a la protección de derivación apropiada (ya sea un fusible o un disyuntor). La conexión a cualquier otro tipo de tomacorriente puede constituir peligro de descarga eléctrica y violar los códigos eléctricos locales.
- No instale el altoparlante en lugares donde haya agua o humedad excesiva.
- No deje que en el altoparlante entre agua ni ningún objeto extraño. No ponga objetos con líquidos encima de la unidad ni cerca de ella.
- Para reducir el riesgo de sobrecalentamiento, no exponga la unidad a los rayos directos del sol ni la instale cerca de artefactos que emiten calor, como estufas o cocinas.
- Este altoparlante contiene niveles de voltaje peligrosos en potencia. No intente desarmar la unidad, pues no contiene piezas que puedan ser repardas por el usuario. Las reparaciones deben efectuarse únicamente por parte del personal de mantenimiento capacitado en la fábrica.

CONTENTS

INTRODUCTION

The MM-4 Miniature Wide-Range Loudspeaker 1
The MM-4CEU Control Electronics Unit (Required) 1

CHAPTER 1: Installing the MM-4 Loudspeaker 3

Using the MUB-MM4 U-Bracket 3
Using the MFMA-MM4 Adapter 3
Loudspeaker Connections 3
Standard Connector 4
Weather-Protected Connector 4
Effect of Cable Resistance on System Performance 4

CHAPTER 2: The MM-4CEU Control Electronics Unit 5

Frequency and Phase Response Correction 5
Driver Protection 5
AC Power 6
Safety Issues 6
Line Level Inputs 6
Line Level Outputs 7
SpeakerSense Inputs 7
MM-4CEU/MM-4 Connection Diagram 8

CHAPTER 3: Choosing a Power Amplifier 9

Gain 9
Protection Circuitry 9
Electrical Characteristics 9
Power Supply 10
About Bridging 10
Controlling Zone Levels 10
Equalization 10

CHAPTER 4: System Design and Optimization Tools 11

Meyer Sound MAPP Online Pro™ 11
SIM® 3 Measurement System 11
Source Independent Measurement Technique 12
Applications 12

APPENDIX A: MM-4 Weather Protected Cable Assembly Procedure 13

APPENDIX B: MM-4 Specifications 14

APPENDIX C: MM-4CEU Specifications 15

APPENDIX D: MM-4 EN3 Fire Alarm Signaling Specifications 16

INTRODUCTION

As you read this manual, you'll find figures and diagrams to help you understand and visualize what you're reading. You'll also find numerous icons that serve as cues to flag important information or warn you against improper or potentially harmful activities. These icons include:

A **NOTE** identifies an important or useful piece of information relating to the topic under discussion.

A **TIP** offers a helpful tip relevant to the topic at hand.

A **CAUTION** gives notice that an action can have serious consequences and could cause harm to equipment or personnel, delays, or other problems.

THE MM-4 MINIATURE WIDE-RANGE LOUDSPEAKER

The MM-4 miniature wide-range loudspeaker (Figure i.1) is a very compact loudspeaker for high-quality distributed system applications. In contrast to conventional low power 70-volt transformer based systems, the MM-4 can produce wide-range high sound pressure levels while dramatically reducing distortion and easing installation requirements.



Figure i.1. MM-4 miniature wide-range loudspeaker

The MM-4 consists of a single 4-inch cone driver with a 16-ohm voice coil mounted in a sealed enclosure. Connecting directly to your amplifier, the MM-4 draws 150 watts peak from the line to produce 112.5 dB peak SPL. Typically, with four MM-4 loudspeakers connected in parallel on the line, the system requires a direct drive power amplifier capable of 600 watts continuous output (49 volts rms) into 4 ohms.

The MM-4's enclosure comes standard with a paintable black anodized finish. The enclosure acts as a sink to dissipate heat from the driver voice coil, and is fitted with a perforated steel grille.

NOTE: The MM-4 can be ordered custom-painted in any color to match your décor.

A looping, sealed EN3 connector is available for outdoor installations, as well as a Phoenix-style keyed connector for indoor systems.

THE MM-4CEU CONTROL ELECTRONICS UNIT (REQUIRED)

A two-channel, single rack unit, the MM-4CEU control electronics unit (Figure i.2) provides the required frequency and phase response correction circuitry tailored to the MM-4 loudspeaker. Through a SpeakerSense™ connection to the power amplifier output, the MM-4CEU continuously monitors the power applied to the drivers, activating integral peak and RMS limiters to protect against over-excursion and overheating.

When several amplifiers are used in a system, the MM-4CEU's SpeakerSense connection works by utilizing Meyer Sound's MultiSense™ technology, allowing each channel to:

- Drive multiple amplifiers
- Monitor two amplifier channels at once
- Activate protection circuits based on the amplifier channel with the highest signal level

MultiSense allows the levels of individual zones to be adjusted using the power amplifier's attenuators while still giving protection to all the loudspeakers on the same MM-4CEU channel. Typically, each channel of the MM-4CEU can drive 12 or more amplifier channels depending on the input impedance of the amplifier.



Figure i.2. The MM-4CEU front panel

The MM-4CEU is specifically designed and required for use in an MM-4 loudspeaker system. In conjunction with professional grade amplifiers, the MM-4CEU protects your MM-4 loudspeakers against damaging overload conditions, while ensuring that they meet their published specifications.

CHAPTER 1: INSTALLING THE MM-4 LOUDSPEAKER

The following MM-4 mounting options accoommodate a variety of different installation requirements:

- The MUB-MM4 U-bracket, which allows the MM-4 to be mounted on virtually any flat surface and enables you to change the angle of the MM-4 with respect to the mounting surface.
- The MFMA-MM4 flush mount adapter, which fits standard 8-inch loudspeaker bezels, for flush-mounting ceiling or in-wall applications.

CAUTION: Do not use the Fire Signaling MM-4 in air handling spaces.

USING THE MUB-MM4 U-BRACKET

The optional MUB-MM4 U-bracket mounts to the two threaded inserts in the MM-4 enclosure sides. It uses two 1/2" long 3/8"-16 stainless steel machine screws, two 1" rubber washers, two 1" metal washers, and neoprene strips attached to the interior to the U-bracket (Figure 1.1).

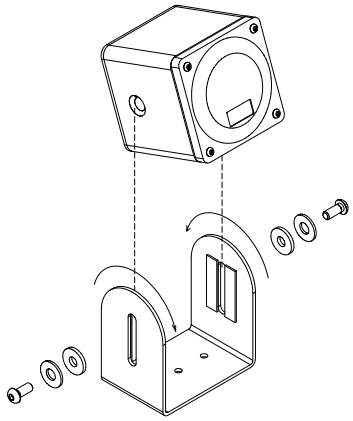

Figure 1.1. Installing the MM-4 into the optional MUB-MM4 U-Bracket

To install the MM-4 into the MUB-MM4 b-Bracket:

1. Gently slide the loudspeaker into the bracket, seating its sides against the attached neoprene strips.
2. Line up the threaded inserts on the loudspeaker near the top of the long guide hole on the bracket for maximum tilting flexibility.
3. Fasten bracket to loudspeaker using two 1/2" x 3/8"-16 machine screws, ensuring that the 1" rubber washers touch the bracket and the 1" metal washers support the machine screws.
4. Half-tighten the machine screws to the bracket, set the angle of the loudspeaker, then tighten the machine screws further to secure the loudspeaker to the bracket. Do not over-tighten.

USING THE MFMA-MM4 ADAPTER

The optional MFMA-MM4 flush mount adapter allows the MM-4 to be used with virtually any ceiling or in-wall flush-mount bezel designed to house an 8-inch cone loudspeaker. The kit includes two L-brackets that fit the bezel's stud pattern, a grille mask, and associated hardware (Figure 1.2).

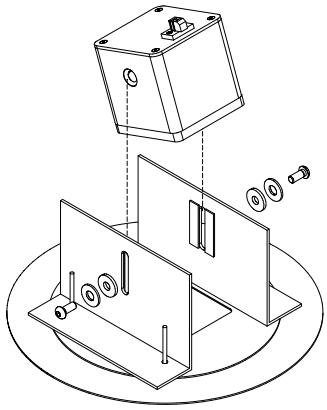

Figure 1.2. Installing the MM-4 into the MFMA-MM4 flush mount adapter

To install the MM-4 into the MFMA-MM4 flush mount adapter:

1. Gently slide the loudspeaker into the adapter's housing, seating its sides against the attached neoprene strips.
2. Line up the threaded inserts on the loudspeaker with the long guide hole on the housing.
3. Fasten adapter to loudspeaker using two 1/2" x 3/8"-16 machine screws, ensuring that the 1" rubber washers touch the adapter housing and the 1" metal washers support the machine screws.
4. Tighten the machine screws to secure the loudspeaker to the adapter. Do not over-tighten.

LOUDSPEAKER CONNECTIONS

To realize the full capabilities of the MM-4, each loudspeaker must be fed with voltage swings up to 49 volts rms (70 volts peak) from the amplifier driving the line, with all loudspeakers in the line connected in parallel. In distributed systems, a line with four to eight loudspeakers connected in parallel is typically driven with one amplifier channel.

CAUTION: The total load of the MM-4 loudspeakers connected in parallel should not be lower than the minimum allowable load of the amplifier. Otherwise, damage to the amplifier and loudspeakers may result.

Standard Connector

A Phoenix-style keyed connector is fitted to the indoor version of the MM-4 (Figure 1.3). The connector is wired with the left terminal as negative (-) and the right terminal as positive (+), when viewing the loudspeaker from the rear. The Phoenix cable mount connector accepts conductors up to 12 AWG (American Wire Gauge) or 2.5 mm^2.

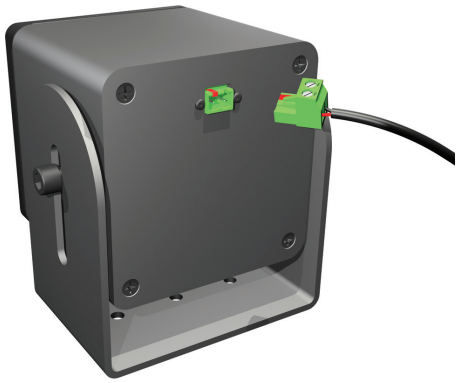

Figure 1.3. Rear panel of the indoor version of the MM-4

TIP: It is possible to loop several MM-4 loudspeakers together using two wires connected to each terminal of the connector.

Weather-Protected Connector

Sealed EN3 connectors are fitted to the weather-protected, outdoor version of the MM-4. In addition to a dedicated input connector, a loop out connector is provided for looping several MM-4 loudspeakers. The input connector is wired with the left terminal as negative (-) and the right terminal as positive (+), when viewing the loudspeaker from the rear (Figure 1.4). The EN3 cable mount connector accepts conductors up to 16 AWG (1.5 mm^2) and an outside jacket diameter of 0.265 inches (6.73 mm).



Figure 1.4. Rear panel of the weather-protected version of the MM-4

NOTE: The EN3 displays a small dot just above Pin 1, the negative terminal. See Appendix A for more information on wiring.

TIP: The chassis-mount EN3 connectors on the MM-4 rear panel are fitted with captive plastic caps. If you are not using the second connector for looping, use the cap to seal it against moisture invasion.

EFFECT OF CABLE RESISTANCE ON SYSTEM PERFORMANCE

When specifying loudspeaker cable for an MM-4 installation, it is important to take into account the total (loop) conductor resistance, since this can affect both peak SPL capability and, at the extreme, system frequency response.

As a rule, MM-4 systems will exhibit 1/2 dB peak SPL loss for every ohm of total loop wiring resistance. Accordingly, 12 ohms of cable resistance will result in a 6 dB peak SPL loss. MM-4 systems can tolerate up to 20 ohms total cable resistance before the frequency response is affected.

You may want to keep the loop resistance of an MM-4 system below 1 ohm to avoid loss of peak SPL capability. Tables 1.1 and 1.2 give resistance (in ohms) per 1000 feet and kilometers, respectively, per conductor for standard AWG and metric wire gauges. For total resistance, multiply the length of the cable by two (two conductors).

Table 1.1 AWG Wire Resistance for Various Gauges

Cable Gauge (AWG)	Resistance (Ω/1000 ft)
22	17.5
20	10.9
18	6.92
16	4.35
14	2.73
12	1.71
10	1.08

Table 1.2 Metric Wire Resistance for Various Gauges

Cable Gauge (mm^2)	Resistance (Ω/km)
0.5	33.23
0.75	22.37
1	17.11
1.5	11.25
2.5	6.75
4	4.277
6	2.864

TIP: For very long runs, you can use a larger cable for most of the length of the run, then terminate with the appropriate gauge listed above for the connector.

CHAPTER 2: THE MM-4CEU CONTROL ELECTRONICS UNIT

The MM-4CEU is a required component for every MM-4 installation. It performs a number of important signal-processing functions to ensure that the MM-4 meets its published specifications and is protected against damaging overload conditions.

The MM-4CEU mounts in a standard 19-inch relay rack and occupies a single rack space (1.75 inches). Each MM-4CEU provides two channels of signal processing, both capable of driving several amplifier channels and monitoring two separate amplifier channels for protection (four amplifier channels total per MM-4CEU). Each channel of the MM-4CEU features an independent signal level attenuator and low cut switch.

NOTE: See Chapter 3, "Choosing a Power Amplifier," for important details about choosing and configuring an amplifier for use with the MM-4CEU.

FREQUENCY AND PHASE RESPONSE CORRECTION

The MM-4CEU incorporates multiple-pole frequency response equalization circuitry that is tailored specifically to the MM-4 loudspeaker's acoustical characteristics. This circuitry assures that the MM-4's response remains within ±4 dB from 160 Hz to 16 kHz (free field). Integral phase response correction circuits maintain a system phase response of ±45° from 700 Hz to 17 kHz.

The MM-4CEU also provides an independent front-panel low-cut switch for each signal channel. This switch introduces a high-pass function that can be used to compensate for low-frequency boost due to half-space loading in flush-mounted configurations. It can also augment the MM-4 loudspeaker's headroom when used with a subwoofer for music reproduction.

NOTE: See the section "Equalization" in Chapter 3, "Choosing a Power Amplifier," for more information on using the low-cut switch on the MM-4CEU.

DRIVER PROTECTION

The MM-4CEU features Meyer Sound's SpeakerSense driver protection circuitry. Through a connection back from the power amplifier output, the MM-4CEU's SpeakerSense function monitors the continuous and peak power being applied to the MM-4 drivers. Meyer Sound's MultiSense function then allows each MM-4CEU channel to monitor two amplifier outputs, assuring that the protection circuits are activated by the signal branch with the highest gain. This allows the MM-4CEU to protect the MM-4 in the following ways:

- When the continuous power exceeds the MM-4's safe limits, the MM-4CEU introduces an RMS limiter that clamps the audio signal to protect the MM-4 driver from damage due to overheating.
- When the peak power exceeds the MM-4's safe limits, the MM-4CEU introduces a fast-acting peak limiter to clamp the signal level and protect the MM-4 driver from excessive excursion.

The functions of the SpeakerSense circuitry are indicated on the MM-4CEU front panel by the following LEDs on each channel:

- Peak Limit — During peak limiting, the Peak Limit LED glows yellow.
- RMS Limit — During RMS limiting, the RMS Limit LED glows yellow.
- Sense — When sensing, the MM-4CEU may display one of two LED colors:
  - When the signal is sensed back through the SpeakerSense connection, the LED glows green.
  - When the gain of the amplifier is below 10 dB or above 30 dB, the LED flashes red, indicating that the protection will not work properly.

When a channel returns to normal, limiting ceases. The LED for that channel is inactive, indicating MM-4CEU is not currently limiting.

AC POWER

The MM-4CEU accommodates international power standards in two ranges: 90 to 130 V AC and 180 to 260 V AC, 50/60 Hz. A rear-panel switch selects between the two.

CAUTION: Be sure to select the correct range for your local power standard before connecting and operating the MM-4CEU.

Use the AC cable wiring diagram, illustrated in Figure 2.1, to create international or special-purpose power connectors:

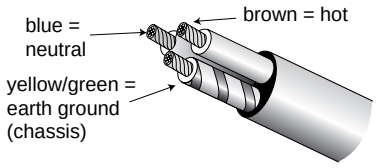

Figure 2.1. AC cable color codes

If the colors referred to in the diagram don't correspond to the terminals in your plug, use the following guidelines:

- Connect the blue wire to the terminal marked with an N or colored black.
- Connect the brown wire to the terminal marked with an L or colored red.
- Connect the green and yellow wire to the terminal marked with an E or colored green (or green and yellow).

SAFETY ISSUES

Pay close attention to these important electrical and safety issues.

- The MM-4CEU requires a grounded outlet.

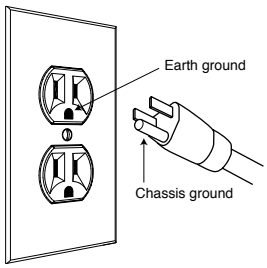

- Do not use a ground-lifting adapter or cut the AC cable ground pin.

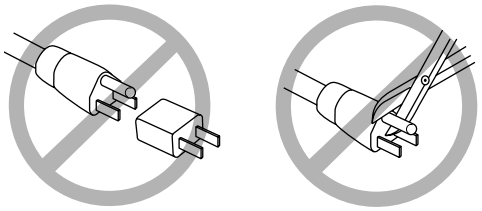

- Keep all liquids away from the MM-4CEU to avoid hazards from electrical shock.
- Do not operate the unit if the power cables are frayed or broken.

LINE LEVEL INPUTS

Each MM-4CEU input presents a 10 kOhms balanced impedance to a three-pin XLR female connector wired as follows:

- Pin 1 — 11 kΩ to chassis and earth ground (ESD clamped)
- Pin 2 — Signal +
- Pin 3 — Signal -
- Case — Earth (AC) ground and chassis

NOTE: Pins 2 and 3 are differentially balanced, so the polarity applied to the input XLR connectors on the MM-4CEU will be replicated on the output XLR connectors. Amplifier XLR polarity, along with its output wiring, will determine the polarity of the entire system.

Use standard audio cables with XLR connectors for balanced signal sources. Telescopic grounding (Pin 1 disconnected on one end) is not recommended.

A single source can drive multiple MM-4CEUs with paralleled inputs. To avoid distortion from the source, make sure the source equipment provides an adequate drive circuit design for the total paralleled load impedance presented by the paralelled processors. The input impedance for a single MM-4CEU is 10 kOhms: if *n* represents the number of MM-4CEUs, paralleling the inputs of *n* MM-4CEUs loudspeakers will produce a balanced input load of 10 kOhms divided by *n*.

For example, cascading an array of 10 MM-4CEUs produces an input impedance of 1000 ohms (10 kOhms divided by 10), indicating that the source equipment should have an output impedance of 100 ohms or less.

NOTE: Most source equipment is safe for driving loads no smaller than 10 times the source's output impedance.

For source equipment with driving capability of 600 ohms, 16 MM-4CEUs could be safely driven in parallel (10 kOhms divided by 16 equals 625).

CAUTION: Shorting any input connector pin to the chassis can create a ground loop and cause hum.

TIP: If abnormal noise (hum, hiss, popping) is produced from the loudspeaker, disconnect the audio source from the MM-4CEU. If the noise stops, the problem is not with the MM-4CEU; check the audio input and AC power.

LINE LEVEL OUTPUTS

The MM-4CEU features push-pull outputs capable of driving 600 ohms and using three-pin XLR male connectors wired as follows:

- Pin 1 — Earth ground/chassis
- Pin 2 — Signal +
- Pin 3 — Signal -

NOTE: The MM-4CEU is a balanced pass-through device (balanced signal in - balanced signal out) and therefore has no effect on the polarity of the signal it receives. Amplifier XLR polarity, along with its output wiring, will determine the polarity of the entire system.

Use standard audio cables with XLR connectors for driving balanced signal inputs. Telescopic grounding (pin 1 disconnected on one end) is not recommended. Each MM-4CEU output can drive multiple power amplifier signal inputs in parallel, to a minimum load impedance of 600 ohms. Refer to your power amplifier specifications to determine input impedance and calculate the net impedance of multiple paralleled amplifier inputs. For example, one channel of a MM-4CEU could drive 20 amplifier channels with 12 kOhms input impedance (600 ohms total impedance).

SPEAKERSENSE INPUTS

For each MM-4CEU channel, connect a cable from the amplifier output to the corresponding SpeakerSense input. If you are driving multiple amplifier channels from a single MM-4CEU output and using MultiSense, connect the two amplifier output channels with the highest gain (not to exceed 30 dB of amplification gain) to a separate, corresponding SpeakerSense input.

CAUTION: When using MultiSense, make sure the two amplifier channels with the highest gains are the ones connected to each of the MM-4CEU's two SpeakerSense inputs.

CAUTION: When using MultiSense, both amplifier outputs MUST be connected with the same polarity. Observe the polarity labels on the MM-4CEU rear panel.

MM-4CEU/MM-4 CONNECTION DIAGRAM

Figure 2.2 on the following page illustrates a typical MM-4CEU connection using four 2-channel amplifiers and 32 MM-4 loudspeakers.

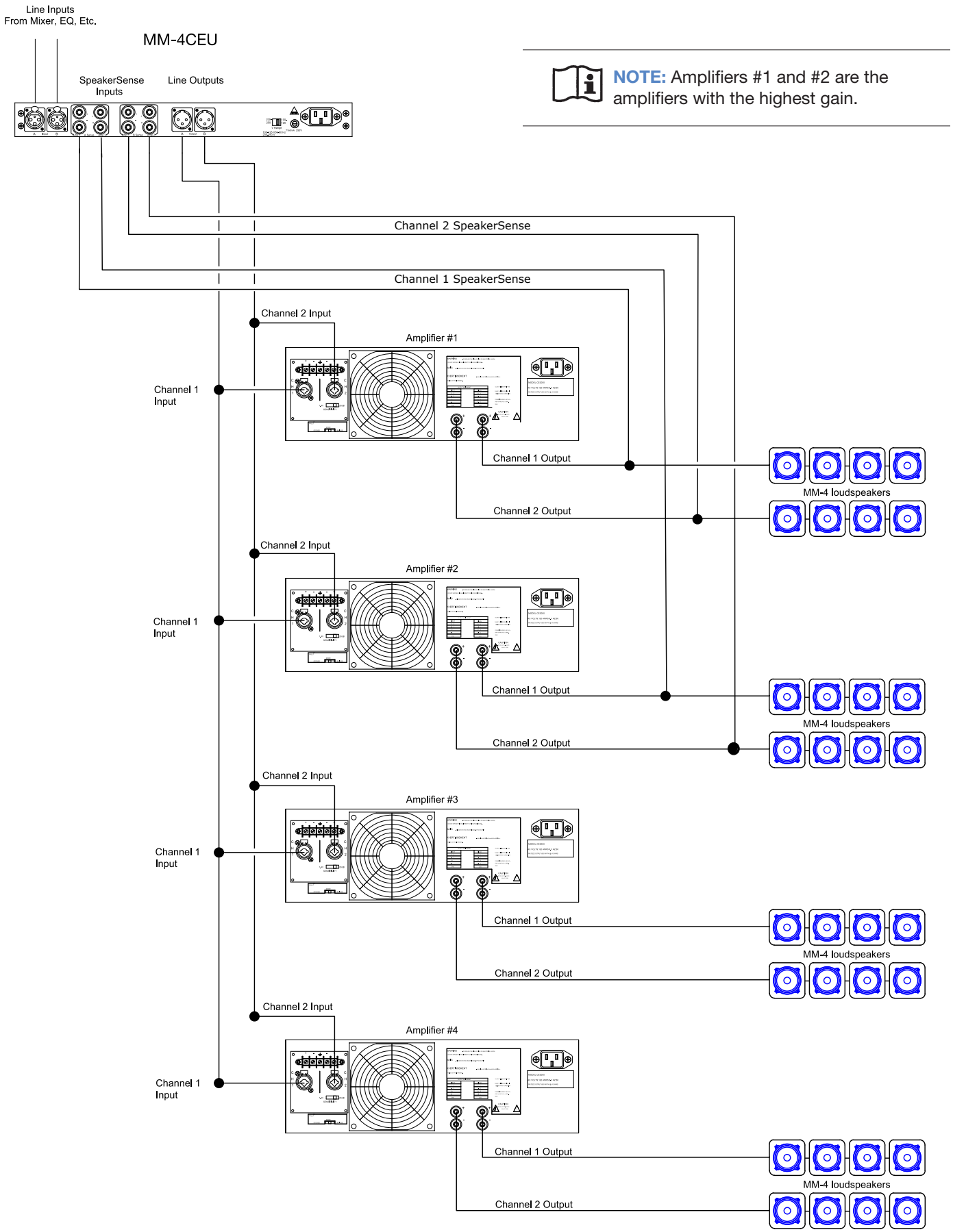

NOTE: Amplifiers #1 and #2 are the amplifiers with the highest gain.

Figure 2.2. Connecting the MM-4CEU control electronics unit

CHAPTER 3: CHOOSING A POWER AMPLIFIER

The MM-4 is designed for high-quality distributed sound systems. To realize the MM-4's full capabilities, a direct-drive power amplifier capable of 49 volts rms (70 volts peak) at the rated load impedance presented by the line configuration is required. The MM-4 presents a nominal load of 16 ohms, and each unit must be wired in parallel with the line. As shown in Table 3.1, the number of MM-4 loudspeakers on a given signal branch can be used to determine the required power rating for the corresponding amplifier.

Table 3.1 Amplifier Power

Number of MM-4 Loudspeakers	Continuous Power Rating
1 (16 Ω load)	150 W
2 (8 Ω load)	300 W
3 (5.3 Ω load)	450 W
4 (4 Ω load)	600 W
8 (2 Ω load)	1200 W

CAUTION: The total load of the MM-4 loudspeakers connected in parallel should not be lower than the minimum allowable load of the amplifier. Otherwise, damage to the amplifier and loudspeakers may result.

The following sections discuss important criteria for choosing and configuring power amplifiers for use with an MM-4 and MM-4CEU distributed system.

GAIN

The gain setting of the power amplifier is crucial to system performance: if the gain is set too low, "upstream" equipment may clip before the amplifier reaches full power. Conversely, if the gain is set too high, not only will system noise increase, the amplifier is capable of overcoming the MM-4CEU's protection circuits and may damage the loudspeakers.

The MM-4CEU is designed to work with amplifiers having gain of between 10 dB and 30 dB.

NOTE: The optimal amplifier gain setting for the MM-4CEU is 20 dB.

The gain of an amplifier can be measured with an rms volt meter by feeding the amplifier with a tone generator at 1 kHz and measuring the input voltage going in (V in) and the voltage delivered at the output (V out) and applying the following expression:

Gain (in dB) = 20 Log (V out / V in)

NOTE: Some manufacturers express the gain of their amplifiers in *voltage gain as a factor* instead of gain in dB. To covert the voltage gain in dB, use the following equation:

Gain (in dB) = 20 Log (Voltage Gain)

For example, a voltage gain of "x20" equates to 26 dB of gain.

PROTECTION CIRCUITRY

Avoid amplifiers with extra "sensing" connections for load protection; the MM-4CEU incorporates all the protection circuitry necessary for reliable performance. A basic, reliable, professional grade amplifier is all that is required.

The amplifier must be AC coupled to the load (i.e. protected from producing DC at its output). The MM-4 is directly coupled to the distribution line, and any significant DC voltage on the line may damage the driver. A relay or crowbar circuit to open or short the amplifier output in fault conditions are preferred.

ELECTRICAL CHARACTERISTICS

Slew rate should be at least 10 volts/microsecond; 30 volts/microsecond or better is preferred.

The amplifier must be stable under all load conditions — shorted, open, inductive or capacitive. Hum and noise should be such that when the amplifier input is shorted, noise from the loudspeaker is indiscernible. Distortion (THD or IM) should be equal to or better than 0.01 percent.

Balanced inputs are required. Input connectors should be XLR-type (preferred) or TRS (tip, ring, sleeve) type 1/4-inch phone female connectors.

The MM-4CEU is a balanced pass-through device (balanced signal in - balanced signal out) and therefore has no effect on the polarity of the signal it receives. Amplifier XLR polarity, along with its output wiring, will determine the polarity of the entire system. For example, an amplifier with input as Pin 2 (+) and Pin 3 (-) on the XLR connector, with the output terminal (+) of the amplifier connected to the terminal (+) of the MM4 loudspeaker connector, will produce a positive pressure pulse when a positive voltage pulse is applied to Pin 2 of the MM-4CEU input XLR.

POWER SUPPLY

Some amplifiers are designed so that the internal power supply rails sag as the load current increases. While the amplifier's rated continuous output at a given load may appear high, its peak output voltage varies with the load impedance. Because a loudspeaker's impedance changes with frequency, such an amplifier will clip prematurely at low points in the loudspeaker's impedance curve, and may deliver too high a voltage at high impedance points. Both possibilities are potentially damaging to the loudspeaker.

A "stiff" power supply therefore assures the best performance. One indicator of a stiff supply is that the amplifier's wattage rating doubles each time the load impedance is halved (as shown in Table 3.1). An amplifier's supply is sufficiently stiff for the MM-4 if its no-load peak output (at clipping) drops no more than 5 volts when the amplifier is connected to an 8-ohm load.

ABOUT BRIDGING

When a power amplifier operates in bridged mode, the polarity of one output is reversed with respect to the other output, and both are fed the same input signal. The load is connected between the channel 1 and channel 2 "hot" terminals.

If you wish to use bridged amplifiers in your MM-4 system, check your amplifier's documentation to make sure which input is used for signal, and which is the + output terminal (positive voltage out for positive input voltage applied).

CAUTION: In bridged mode, an amplifier's minimum allowable load is twice that of each output in dual channel configuration. For example, if an amplifier is rated for a 4-ohm load, then the minimum in bridged mode should be 8 ohms. Trying to drive a 4-ohm load with such an amplifier in bridged mode will cause "current clipping" and could damage the loudspeakers.

CONTROLLING ZONE LEVELS

In a typical MM-4 distributed installation, there are two options for adjusting the level in a coverage zone:

1. The corresponding MM-4CEU "Attn dB" control (input attenuation), which will adjust the level of all the amplifiers fed by that channel of the processor
2. The corresponding amplifier channel attenuators, which will adjust the level of all the loudspeakers fed by that amplifier channel

With the amplifier attenuators set to maximum (making sure the gain does not exceed 30 dB), first use the MM-4CEU level controls to set zone levels. Where a single MM-4CEU channel controls several zones (using MultiSense), use the individual amplifier channel attenuators to adjust individual zones.

CAUTION: When using multiple amplifiers and if adjustments are made on the amplifier channels, make sure that the two amplifier channels with the highest gains are the ones connected to each of the MM-4CEU's two SpeakerSense inputs.

EQUALIZATION

For best results, Meyer Sound's Galileo 408 or Galileo 616 are recommended; for high-resolution measurement (strongly recommended), the preferred tool is Meyer Sound's SIM®. Equalize zones individually, where adjacent zones overlap significantly (which is not normally preferred in distributed systems), checking the overlap zone and adjusting as necessary to provide the smoothest transition between zones.

When the MM-4 is mounted against a wall surface or in a flush-mounting bezel, half-space loading may cause low-frequency extension and boost. In voice-only paging systems, low-frequency boost is to be avoided, since it can harm intelligibility. Use the MM-4CEU Lo-Cut switch to compensate for half-space loading effects.

The Lo-Cut switch may also be used to increase headroom when the MM-4 is used with subwoofers for music reinforcement. Consult your subwoofer's documentation for detailed information about crossover optimization.

TIP: Systems with subwoofers will almost always require high-resolution measurement and equalization to achieve the best results, because low frequencies are most affected by boundary conditions and localized acoustic phenomena such as resonance.

CHAPTER 4: SYSTEM DESIGN AND INTEGRATION TOOLS

Meyer Sound offers two comprehensive tools to assist you with the acoustical and functional requirements of system design and optimization. This chapter introduces you to MAPP Online Pro, Meyer Sound's powerful online acoustical prediction tool, and SIM 3, a robust instrumentation package for system measurement, analysis, and more.

MEYER SOUND MAPP ONLINE PRO

Based on a patented method, MAPP Online Pro is a powerful, cross-platform, Java-based application for accurately predicting the coverage pattern, frequency response, impulse response, and maximum SPL output of single or arrayed Meyer Sound loudspeakers.

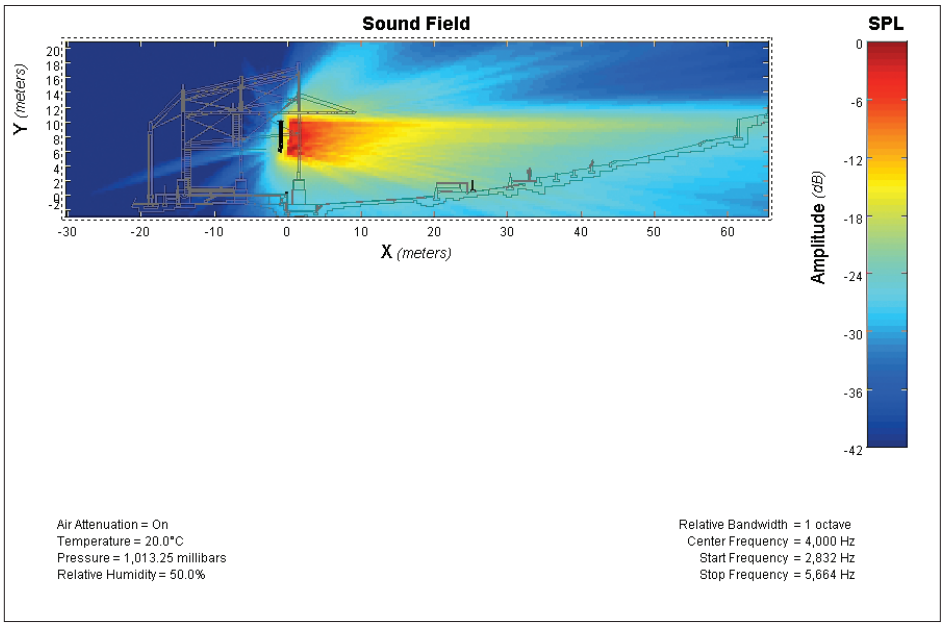

Figure 4.1. MAPP Online Pro is an intuitive, powerful system design tool

Residing on the user's local computer, the Java client application facilitates configuring arrays of a wide variety of Meyer Sound products and, optionally, defining the environment in which they will operate, including air temperature, pressure, humidity, and the location and composition of walls. In addition CAD (DXF) files can be imported directly for accurate venue definition. You can find more information as well as apply for MAPP Online Pro at:

www.meyersound.com/mapponlinepro

NOTE: To use MAPP Online Pro, you will need to register by clicking the "Apply for MAPP Online Pro" button on the Web page listed previously, or the "MAPP Online Pro" button on www.meyersound.com. After registration and upon approval, an email will be sent to you with a user name and password along with the URL where you can download MAPP Online Pro. Online instructions will guide you through the download and setup process.

When a prediction is requested, data are sent over the Internet to a high-powered server at Meyer Sound running a sophisticated acoustical prediction algorithm using high-resolution, complex (magnitude and phase) polar data. Predicted responses are returned over the Internet and displayed on the local computer in color.

With MAPP Online Pro, you can:

- Run multiple "what if" scenarios in minutes to refine your system design for best coverage of the intended audience area
- Clearly see interactions among loudspeakers to help minimize destructive interference by re-aiming the loudspeakers or adjusting the position
- Place microphones anywhere in the sound field and predict the frequency response, impulse response, and sound pressure at the microphone position
- Plan an entire portable or fixed loudspeaker system and determine delay settings for fill loudspeakers
- Use virtual Galileo equalization to predetermine the correct control settings for best system response
- Gain valuable load information about the array to determine rigging capacities, front to back weight distribution, as well as center of gravity of the array
- Export images to help generate explanatory presentation materials for clients

The key to MAPP Online Pro's value is the accuracy of its predictions. Performance predictions for each Meyer Sound loudspeaker found in MAPP Online Pro are based on a model of that product built from 360 1/48th-octave–band measurements taken with a SIM audio analyzer in our anechoic chamber. The extreme consistency found from cabinet to cabinet in Meyer Sound products guarantees that the predictions MAPP Online Pro makes from this high-resolution data will closely match actual performance.

For touring, MAPP Online Pro allows fast and accurate planning of system deployment for each venue on the tour, including both coverage and rigging information. Sound system designers for fixed installations can inform clients with understandable graphic illustrations and detailed statistics on how a proposed system will perform. The designer then arrives at the installation prepared with a wealth of information that ensures the system will satisfy their requirements "out of the box," including basic system delay and equalization settings. MAPP Online Pro's accurate, high-resolution predictions eliminate unexpected coverage problems and minimize onsite adjustments.

MAPP Online Pro client software is upgraded continually in order to add new Meyer Sound products to the database and enhance user features. Most upgrades are downloaded automatically when logging on to a MAPP Online Pro session. The MAPP Online Pro database includes nearly all current Meyer Sound products, including all M Series full-range and subwoofer cabinets.

MAPP Online Pro is compatible with Windows, Linux®, Unix®, and MacOS® (10.4 and higher) operating systems. Additional system requirements and recommendations are listed on the MAPP Online Pro Web page.

SIM 3 MEASUREMENT SYSTEM

The SIM 3 audio analyzer system includes a selection of hardware options, microphones, and accessory cables.

The SIM audio analyzer system is optimized for making audio frequency measurements of an acoustical system with a resolution of up to 1/48th of an octave; the high resolution enables you to apply precise electronic corrections to adjust system response using frequency and phase (time) domain information.

Source Independent Measurement Technique

The SIM 3 audio analyzer implements the Meyer Sound source independent measurement technique, a dual-channel method that accommodates statistically unpredictable excitation signals. Any excitation signal that encompasses the frequency range of interest (even intermittently) may be used to obtain highly accurate measurements of acoustical or electronic systems. For example, concert halls and loudspeaker systems may be characterized during a musical performance using the program as the test signal, allowing you to:

- View measurement data as amplitude versus time (impulse response) or amplitude and phase versus frequency (frequency response)
- Utilize a single-channel spectrum mode
- View frequency domain data with a logarithmic frequency axis
- Determine and internally compensate for propagation delays using SIM 3 Delay Finder function

Applications

The main application of the SIM 3 audio analyzer is loudspeaker system testing and alignment. This includes:

- Measuring propagation delay between the subsystems to set correct polarities and set very precise delay times
- Measuring variations in frequency response caused by the acoustical environment and the placement and interaction of the loudspeakers to set corrective equalization
- Optimizing subwoofer integration
- Optimizing loudspeaker arrays

The analyzer can also be used in the following applications:

- Microphone calibration and equalization
- Architectural acoustics
- Transducer evaluation and correction
- Echo detection and analysis
- Vibration analysis
- Underwater acoustics

APPENDIX A

MM-4 Weather Protected Cable Assembly Procedure

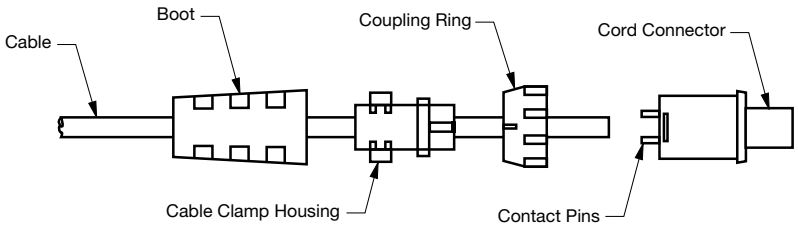

Step 1:
Feed the end of the cable through the boot, cable clamp housing, and coupling ring in the order and position shown.

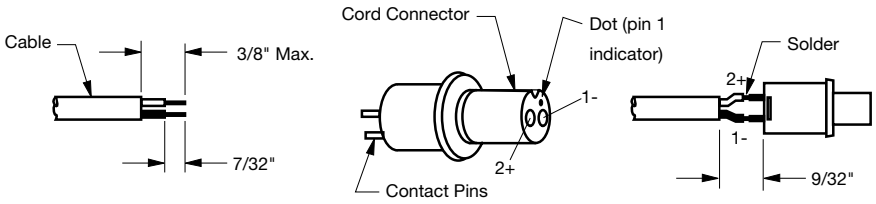

Step 2:
Strip cable as shown and solder conductors to pins.
NOTE: Pin 1 is negative (-) and pin 2 is positive (+)

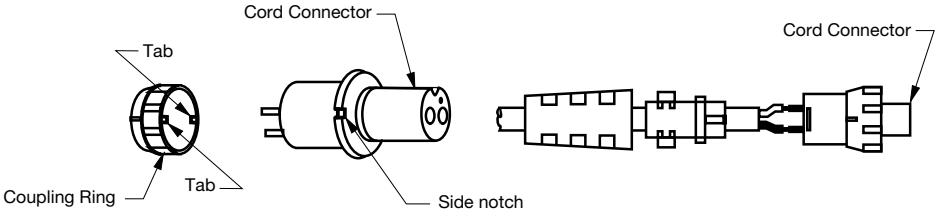

Step 3:
Align coupling ring tabs with cord connector's side notches and push the coupling ring onto cord connector.

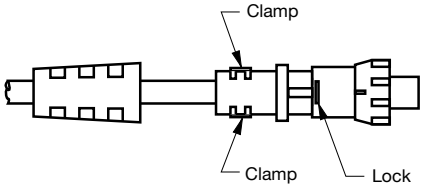

Step 4:
Push the cable clamp housing foward until it locks into the connector body and snap the two clamps into their compartments.

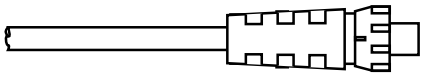

Step 5:
Push the boot all the way foward to seat tightly onto the cable clamp housing.

NOTE: The EN3 cable mount connector accepts conductors up to 16 AWG (1.5 mm²) and an outside jacket diameter of 0.265 inches (6.73 mm).

APPENDIX B

MM-4 Specifications

Acoustical (MM-4CEU required)	
Note: To realize the MM-4's full capabilities, an MM-4CEU must be used. The amplifier driving the loudspeakers should be capable of 49 volts RMS at the rated load impedance, and provide a voltage gain between 10 and 30 dB (20 dB for optimal S/N ratio and protection). The power rating of the amplifier should be as follows: 1 MM-4/ch (16 Ω): 150 W; 2 MM-4/ch (8 Ω): 300 W; 4 MM-4/ch (4 Ω): 600 W; 8 MM-4/ch (2 Ω): 1200 W	
Operating frequency range	120 Hz - 18 kHz
	Note: Recommended maximum operating frequency range. Response depends on loading conditions and room acoustics.
Frequency response	160 Hz - 16 kHz ±4 dB
	Note: Free field, measured with one-third octave frequency resolution at 4 meters.
Phase response	700 Hz - 17 kHz ±45°
Maximum peak SPL	112.5 dB
	Note: Measured with pink noise at 1 meter.
Maximum continouos SPL	100 dB
	Note: Measured at 1 meter, driven continuously for two hours with pink noise signal having a 12.5 dB peak-average ratio.
Horizontal coverage	80° (3 kHz - 14 kHz ±10°); 120° (below 2 kHz)
Vertical coverage	80° (3 kHz - 14 kHz ±10°); 120° (below 2 kHz)
Transducer	
	One 4" cone driver; Nominal impedance: 16 Ω; Voice coil size: 0.75"; Power-handling capability: 100 W (AES)
	Note: Power handling is measured under AES standard conditions: transducer driven continuously for two hours with band-limited noise signal having a 6 dB peak-average ratio. Aluminum enclosure dissipates heat generated by driver.
Physical	
Dimensions	4.00" H x 4.00" W x 4.20" D excluding connector (102 mm x 102 mm x 107 mm)

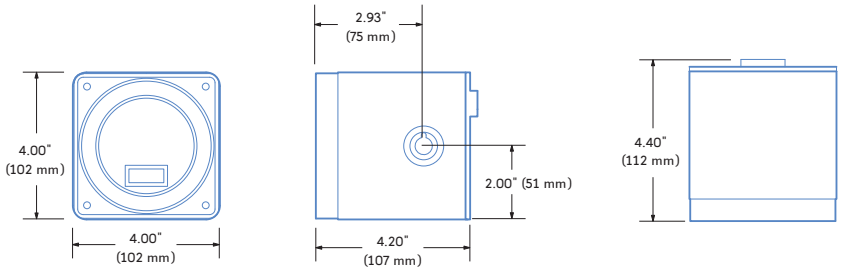

Weight	3 lbs 14 oz (1.76 kg)
Enclosure	Extruded aluminum
Finish	Black anodized; custom color available
Protective grille	Perforated metal screen

MM-4 Rear Panels

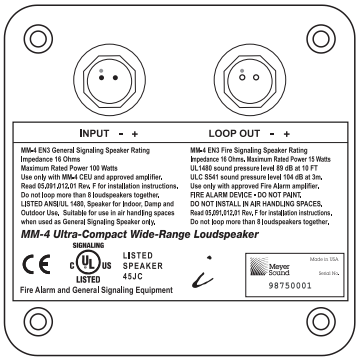

Weather-protected version: EN3 Connector

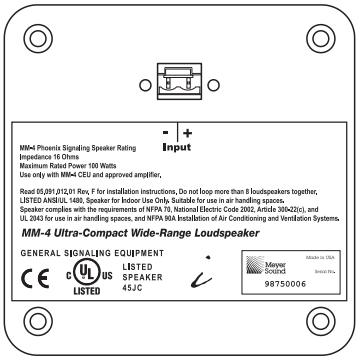

Indoor version: Phoenix-Style Connector

APPENDIX C

MM-4CEU Specifications

Audio Input	
Type	Differential, electronically balanced; RF and transient protected
Max common mode range	±15 V DC, clamped to earth for voltage transient protection
Connector(s)	Two female XLR, one for each input channel
Input Impedance	10 kΩ differential between pins 2 and 3
Wiring	Pin 1: Chassis/earth through 11 kΩ, 1000 pF, 15 V clamp network to provide virtual ground lift at audio frequencies; Pin 2: Signal +; Pin 3: Signal -; Case: Earth ground and chassis
DC blocking	None
CMRR	>60 dB, typically 80 dB (50 Hz - 1 kHz)
RF Filter	Common mode 850 kHz; differential mode 370 kHz
Input Level	Maximum input voltage 25 V peak-peak (+21 dBu sine wave)
Audio Output	
Type	Active push-pull, electronically balanced, capable of driving 600 Ω Load; RF & transient protected
Out voltage	Maximum 50 V peak-peak (+27 dBu sine wave)
Connectors	Two male XLR, one for each output channel
Output impedance	200 Ω differential between pins 2 and 3
Wiring	Pin 1: Chassis/earth; Pin 2: Signal +; Pin 3: Signal -
Audio Performance	
Hum and noise	<-90 dBV (A-weighted)
Dynamic range	>115 dB
THD	< 0.01%, typically <.002%
Response accuracy	<0.25 dB (20-20 kHz)
AC Power	
Connector	IEC 320
Voltage selection	Switch selectable on rear panel
UL/CE rated voltage	90 - 130 V AC; 180 - 260 V AC; 50/60 Hz
Current draw	0.160 A max (rear panel T 160 mA fuse protected)
Physical	
LED Indicators	Sense Threshold/Gain Detect: (2) Red/Green LEDs, one per channel; RMS Limiters: (2) Yellow LEDs, one per channel; Peak Limiters: (2) Yellow LEDs, one per channel; Power: (1) Green LED Front panel: (2) Rotary input attenuators, one per channel; (2) Recessed low cut filter switches, one per channel; (1) AC power latching push switch
Controls	Rear Panel: (1) AC voltage selector, recessed; (1) T250V fuse and holder
SpeakerSense connectors	MultiSense, (4) dual banana, two per channel
	Note: When using multiple sense lines, all lines must be in same electrical polarity.
Weight	19.00" W x 1.75" H x 7.75" D standard rack mount (482 mm x 44 mm x 197 mm)
Finish	Black, powder coated

MM-4CEU Front & Rear Panels

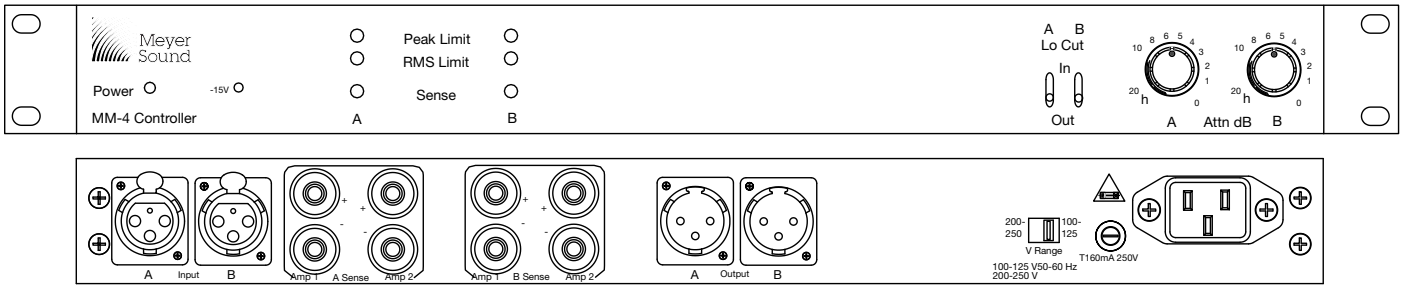

APPENDIX D

MM-4 EN3 Fire Alarm Signaling Specifications

Acoustical (Fire Alarm Amplifier Required)	
Frequency response	Fire alarm; 400 Hz to 4 kHz
	Note: Stated per the UL 1480 reporting method.
Maximum continouos SPL	UL1480 sound pressure level 89 dB at 10 FT
	10 kΩ differential between pins 2 and 3
	Note: Measured per UL1480.
	ULC S541 sound pressure level 104 dB at 3m
	Note: Measured per ULC S541.

CAUTION: Do not use the Fire Signaling MM-4 in air handling spaces.

DIRECTIONAL CHARACTERISTIC Per S541 -07 Sec. 7.5

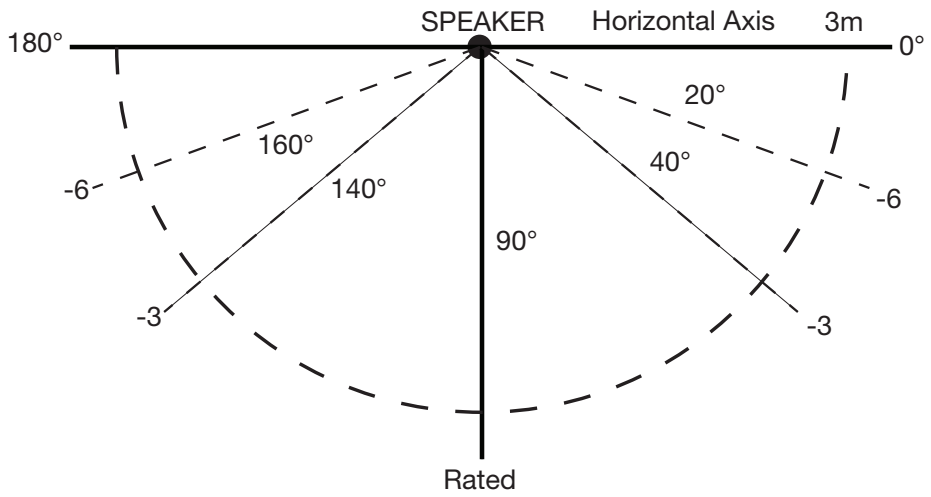

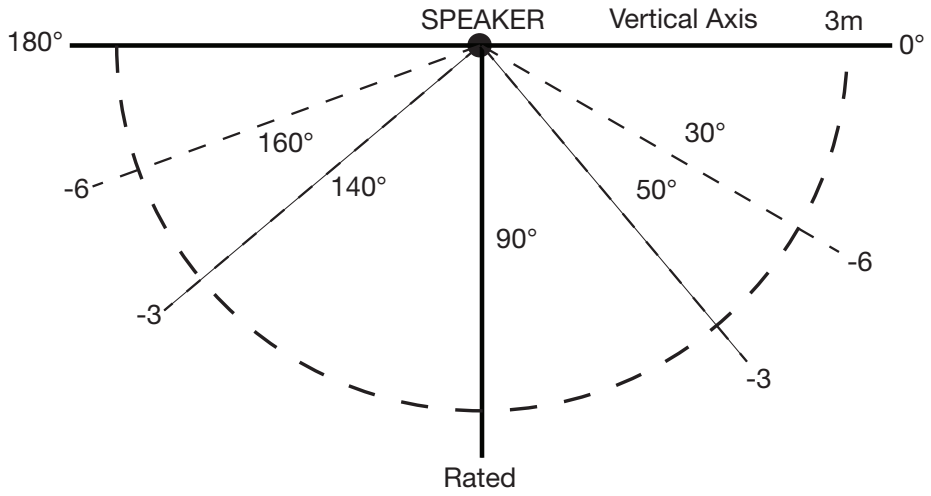

thinking sound

Meyer Sound Laboratories Inc.
2832 San Pablo Avenue
Berkeley, CA 94702

www.meyersound.com
T: +1 510 486.1166
F: +1 510 486.8356

© 2010
Meyer Sound Laboratories Inc.
05.091.012.01 Rev. F2