MG-MINA/LINA/750-LFC Multipurpose Grid and Accessories

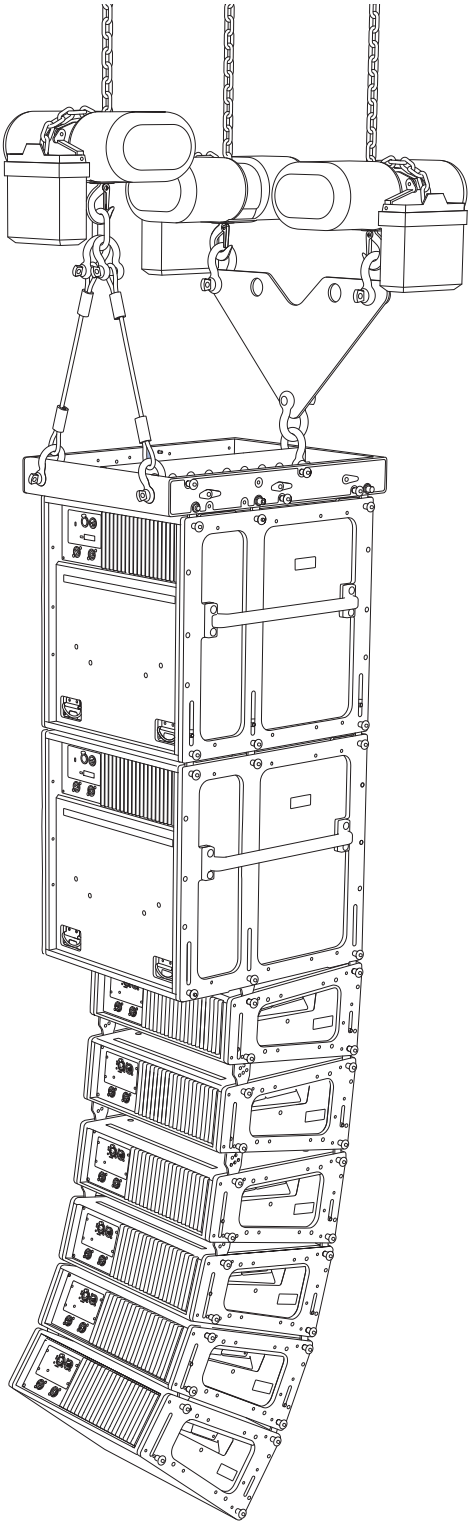

Keep these important operating instructions.
Check www.meyersound.com for updates.

© 2019
Meyer Sound. All rights reserved.
MG-MINA/LINA/750-LFC Multipurpose Grid and Accessories Assembly Guide, PN 05.207.101.02 A

The contents of this manual are furnished for informational purposes only, are subject to change without notice, and should not be construed as a commitment by Meyer Sound Laboratories Inc. Meyer Sound assumes no responsibility or liability for any errors or inaccuracies that may appear in this manual. Except as permitted by applicable copyright law, no part of this publication may be reproduced, stored in a retrieval system, or transmitted, in any form or by any means, electronic, mechanical, recording or otherwise, without prior written permission from Meyer Sound.

Compass RMS, GuideALink, LINA, MAPP, RMS, RMServer, and all alpha-numeric designations for Meyer Sound products and accessories are trademarks of Meyer Sound. Galileo, Meyer Sound, the Meyer Sound wave logo, QuickFly, SIM, and Thinking Sound are registered trademarks of Meyer Sound Laboratories Inc. (Reg. U.S. Pat. & Tm. Off.). All third-party trademarks mentioned herein are the property of their respective trademark holders.

IMPORTANT SAFETY INSTRUCTIONS

These symbols indicate important safety or operating features in this booklet and on the frame or chassis:

SYMBOLS USED

				
Dangerous voltages: risk of electric shock	**Important operating instructions**	**Replaceable Fuse**	**Protective earth ground**	**Hot surface: do not touch**
Gefährliche Spannungen: Stromschlaggefahr	**Hinweis auf wichtige Punkte der Betriebsanleitung**	**Austauschbare Sicherung**	**Schutzerde**	**Heiße Oberfläche: nicht berühren**
Pour indiquer les risques résultant de tensions dangereuses	**Instructions d'utilisation importantes**	**Fusible remplaçable**	**Terre de protection**	**Surface chaude: ne pas toucher**
Para indicar voltajes peligrosos	**Instrucciones importantes de funcionamiento y/o Mantenimiento**	**Fusible reemplazable**	**Toma de tierra de protección**	**Superficie caliente: no tocar**

1. Read these instructions.
2. Keep these instructions.
3. Heed all warnings.
4. Follow all instructions.
5. Do not use this apparatus near water.
6. Clean only with dry cloth.
7. Do not block any ventilation openings. Install in accordance with Meyer Sound's installation instructions.
8. Do not install near any heat sources such as radiators, heat registers, stoves, or other apparatus that produce heat.
9. Do not defeat the safety purpose of the grounding-type plug. A grounding type plug has two blades and a third grounding prong. The third prong is provided for your safety. If the provided plug does not fit into your outlet, consult an electrician for replacement of the obsolete outlet.
10. Protect the power cord from being walked on or pinched, particularly at plugs, convenience receptacles, and the point where they exit from the apparatus. The AC mains plug or appliance coupler shall remain readily accessible for operation.
11. Only use attachments/accessories specified by Meyer Sound.
12. Use only with the caster rails or rigging specified by Meyer Sound, or sold with the apparatus. Handles are for carrying only.
13. Unplug this apparatus during lightning storms or when unused for long periods of time.
14. If equipped with an external fuse holder, the replaceable fuse is the only user-serviceable item. When replacing the fuse, only use the same type and the same value.
15. Refer all other servicing to qualified service personnel. Servicing is required when the apparatus has been damaged in any way, such as when the power-supply cord or plug has been damaged; liquid has been spilled or objects have fallen into the apparatus; rain or moisture has entered the apparatus; the apparatus has been dropped; or when for undetermined reasons the apparatus does not operate normally.

WARNING: To reduce the risk of fire or electric shock, do not expose this apparatus to rain or moisture. Do not install the apparatus in wet or humid locations without using weather protection equipment from Meyer Sound.

PowerCon Use

⚠ **CAUTION:** Disconnect the mains plug before disconnecting the power cord from the loudspeaker.

English

- To reduce the risk of electric shock, disconnect the apparatus from the AC mains before installing audio cable. Reconnect the power cord only after making all signal connections.
- Connect the apparatus to a two-pole, three-wire grounding mains receptacle. The receptacle must be connected to a fuse or circuit breaker. Connection to any other type of receptacle poses a shock hazard and may violate local electrical codes.
- Do not install the apparatus in wet or humid locations without using weather protection equipment from Meyer Sound.
- Do not allow water or any foreign object to get inside the apparatus. Do not put objects containing liquid on or near the apparatus.
- To reduce the risk of overheating the apparatus, avoid exposing it to direct sunlight. Do not install the apparatus near heat-emitting appliances, such as a room heater or stove.
- If equipped with an external fuse holder, the replaceable fuse is the only item that can be serviced by the user. When replacing the fuse, only use the same type and value.
- This apparatus contains potentially hazardous voltages. Do not attempt to disassemble the apparatus. The only user-serviceable part is the fuse if so equipped. All other repairs should be performed only by factory-trained service personnel.

Deutsch

- Zur Minimierung der Gefahr eines elektrischen Schlages trennen Sie das Produkt vor dem Anschluss von Audio- und/oder Steuerleitungen vom Stromnetz. Das Netzkabel darf erst nach Herstellung aller Signalverbindungen wieder eingesteckt werden.
- Das Produkt an eine vorschriftsgemäss installierte dreipolige Netzsteckdose (Phase, Neutralleiter, Schutzleiter) anschließen. Die Steckdose muss vorschriftsgemäß mit einer Sicherung oder einem Leitungsschutzschalter abgesichert sein. Das Anschließen des Produkts an eine anders ausgeführte Stromversorgung kann gegen Vorschriften verstossen und zu Stromunfällen führen.
- Das Produkt nicht an einem Ort aufstellen, an dem es direkter Wassereinwirkung oder übermäßig hoher Luftfeuchtigkeit ausgesetzt werden könnte, solange es sich nicht um ein Produkt handelt, dass mit der Meyer Sound Weather Protection Option ausgestattet ist.
- Vermeiden Sie das Eindringen von Wasser oder Fremdkörpern in das Innere des Produkts. Stellen Sie keine Objekte, die Flüssigkeit enthalten, auf oder neben dem Produkt ab.
- Um ein Überhitzen des Produkts zu verhindern, halten Sie das Gerät von direkter Sonneneinstrahlung fern und stellen Sie es nicht in der Nähe von wärmeabstrahlenden Geräten (z.B. Heizgerät oder Herd) auf.
- Bei Ausstattung mit einem externen Sicherungshalter ist die austauschbare Sicherung das einzige Gerät, das vom Benutzer gewartet werden kann. Verwenden Sie beim Austausch der Sicherung nur den gleichen Typ und Wert.
- Dieses Gerät enthält möglicherweise gefährliche Spannungen. Versuchen Sie nicht, das Gerät zu zerlegen. Der einzige vom Benutzer zu wartende Teil ist die Sicherung, falls vorhanden. Alle anderen Reparaturen dürfen nur von im Werk geschultem Servicepersonal ausgeführt werden.

Français

- Pour éviter tout risque d’électrocution, débranchez l’enceinte de la prise secteur avant de mettre en place le câble audio.Ne rebranchez le cordon secteur qu’après avoir procédé à toutes les connexions de signal audio
- Branchez l’enceinte sur une prise murale à deux fiches et trois conducteurs avec terre. Cette prise doit être reliée à une ligne électrique protégée par un fusible ou un court-circuit. Utiliser une prise murale de type différent crée des risques d’électrocution, et peut enfreindre des réglementations électriques locales.
- N’installez pas l’enceinte dans des endroits humides ou en présence d’eau sans utiliser d’équipements de protection adéquats fournis par Meyer Sound.
- Ne laissez pas d’eau ou d’objet étranger, quel qu’il soit, pénétrer à l’intérieur de l’enceinte. Ne posez pas d’objet contenant du liquide sur ou à proximité de l’enceinte.

- Pour réduire les risques de surchauffe, évitez d'exposer directement l'enceinte aux rayons du soleil. Ne l'installez pas à proximité de sources de chaleur, radiateur ou four par exemple.
- S'il est équipé d'un porte-fusible externe, le fusible remplaçable est le seul élément qui peut être réparé par l'utilisateur. Lors du remplacement du fusible, n'utilisez que le même type et la même valeur.
- Cet appareil contient des tensions potentiellement dangereuses. N'essayez pas de démonter l'appareil. La seule pièce pouvant être réparée par l'utilisateur est le fusible, s'il en est équipé.Toutes les autres réparations doivent être effectuées uniquement par du personnel de maintenance formé en usine.

Español

- Para reducir el riesgo de descarga eléctrica, desconecte el aparato de la red eléctrica antes de instalar el cable de audio. Vuelva a conectar el cable de alimentación sólo después de realizar todas las conexiones de señal.
- Conecte el aparato a una toma de corriente de dos polos y tres hilos con conexión a tierra. El receptáculo debe estar conectado a un fusible o disyuntor. La conexión a cualquier otro tipo de receptáculo representa un riesgo de descarga eléctrica y puede violar los códigos eléctricos locales.
- No instale el aparato en lugares húmedos o mojados sin usar el equipo de protección contra intemperie de Meyer Sound.
- No permita que penetre agua u otros objetos extraños en el interior del aparato. No coloque objetos que contengan líquido sobre o cerca de la unidad.
- Para reducir el riesgo de sobrecalentamiento del aparato, evite exponerlo a la luz solar directa. No instale la unidad cerca de aparatos que emitan calor, como un calefactor o una estufa
- Si está equipado con un portafusibles externo, el fusible reemplazable es el único elemento que puede ser reparado por el usuario. Cuando reemplace el fusible, use solamente el mismo tipo y valor.
- Este aparato contiene voltajes potencialmente peligrosos. No intente desmontar la unidad. La única pieza que el usuario puede reparar es el fusible si equipado con él. Todas las demás reparaciones deben ser realizadas únicamente por personal de servicio capacitado de fábrica.

CONTENTS

Important Safety Instructions iii

Symbols Used iii

Chapter 1: Introduction 1

How to Use This Manual 1
Safety Statement for QuickFly Rigging 1
LINA and 750-LFC Rigging Options 3

Chapter 2: MRK-750 Rigging Upgrade Kit 7

MRK-750 Rigging Upgrade Kit Contents 7
Installing the MRK-750 Rigging Upgrade Kit 8

Chapter 3: 750-LFC Groundstacks and Cardioid Arrays 11

Groundstacking 750-LFC Loudspeakers (Without Grid) 11
750-LFC Cardioid Arrays 12

Chapter 4: Loudspeaker GuideALinks 13

LINA GuideALinks 13
750-LFC GuideALinks 17
GLK-750 Grid Link Kit 18

Chapter 5: MG-MINA/LINA/750-LFC Grid 23

MG-MINA/LINA/750-LFC Grid Load Ratings 25

Chapter 6: Flying Arrays 27

MG-MINA/LINA/750-LFC Grid Orientations for Flown Configurations 27
MG-MINA/LINA/750-LFC Pickup Configurations 29
MAPP System Design Tool and Rigging information 30

Chapter 7: MVP Motor Vee Plate 35

MVP Motor Vee Plate Kit Contents 36
MVP Motor Vee Plate Load Ratings 36

Chapter 8: PBF-LINA Pull-Back Frame 37

PBF-LINA Kit Contents 37
PBF-LINA Pullback Frame Dimensions 38
PBF-LINA Pullback Frame Load Ratings 38
Verifying PullBack Requirements in MAPP 40

Chapter 9: Groundstacking with the MG-MINA/LINA/750-LFC Grid 43

Angles for Groundstacked LINAs with the MG-MINA/LINA/750-LFC 44
Groundstacking LINAs on the 750-LFC 47

Chapter 10: MYA-MINA/LINA Mounting Yoke **49**

MYA-MINA/LINA Load Ratings 52
MYA-MINA/LINA Bracket Options 53
MYA-MINA/LINA Flown Configurations 54
MYA-MINA/LINA Pole-Mount Configurations 56

Chapter 11: MUB-MINA/LINA U-Bracket **57**

MUB-MINA/LINA Load Ratings 59
MUB-MINA/LINA Angle Settings 59
MUB-MINA/LINA Floor-Mount Configurations 61
MUB-MINA/LINA Pole-Mount Configurations 63
MUB-MINA/LINA Ceiling-Mount Configurations 64
MUB-MINA/LINA Flown Configurations 65

Chapter 12: MPK Pole and pole-mount receptacle **67**

Pole-Mount Receptacle 67

Chapter 13: The MCF-MINA/LINA Caster Frame **69**

Safety Guidelines for the MCF-MINA/LINA Caster Frame 72

Chapter 14: MCF-750 Caster Frame **73**

Dimensions: MCF-750 Caster Frame with rigging 76
Dimensions: MCF-750 Caster Frame without rigging 77
Safety Guidelines for the MCF-750 Caster Frame 77

Appendix A: Assembling Arrays with the Grid **79**

Appendix B: ULTRA Weather Protection Version **83**

CHAPTER 1: INTRODUCTION

HOW TO USE THIS MANUAL

Make sure to read these instructions in their entirety before configuring a Meyer Sound loudspeaker system. In particular, pay close attention to material related to safety issues.

As you read these instructions, you will encounter the following icons for notes, tips, and cautions:

NOTE: A note identifies an important or useful piece of information relating to the topic under discussion.

TIP: A tip offers a helpful tip relevant to the topic at hand.

CAUTION: A caution gives notice that an action may have serious consequences and could cause harm to equipment or personnel, or could cause delays or other problems.

Information and specifications are subject to change. Updates and supplementary information are available at www.meyersound.com.

Meyer Sound Technical Support is available at:

- **Tel:** +1 510 486.1166
- **Tel:** +1 510 486.0657 (after hours support)
- **Web:** www.meyersound.com/support

SAFETY STATEMENT FOR QUICKFLY RIGGING

Please read this Statement carefully and in its entirety. It contains important information regarding safety issues, including guidelines for general safe use of rigging systems as well as advisories on government regulations and liability laws.

This Statement assumes that the owners and/or users of a QuickFly® system are knowledgeable and experienced in the areas of rigging and flying loudspeaker systems. Many issues of crucial concern, such as the determination of appropriateness and condition of venue rigging points, cannot be addressed here. Therefore, the user must assume all responsibility for the appropriate use of QuickFly systems in any particular location or circumstance.

The suspension of large, heavy objects in public places is subject to numerous laws and regulations at the national/federal, state/provincial, and local levels. The user must assume responsibility for making sure that use of any QuickFly system and its components in any particular circumstance or venue conforms to all applicable laws and regulations in force at the time.

Load Ratings and Specifications

Long-term safe operation is a central concern in the design and manufacture of any rigging/flying system. Meyer Sound has taken great care in material selection and component design. In all critical cases, load points are redundant, with a safety margin that allows one or more load points to fail while maintaining system integrity. After manufacture, all load-critical system components are individually inspected.

All load ratings and other specifications given in this manual are the result of accepted engineering practice and careful testing. However, such specifications and ratings are subject to change. Users are advised to check the QuickFly section of the Meyer Sound website at

www.meyersound.com

or contact Technical Support at regular intervals to check for updated or revised information.

Regulatory Compliance

The design and safe working load (SWL) ratings of the QuickFly system are intended to be in compliance with all known regulatory statutes currently applicable in the United States. Unless otherwise specified, all working loads are based on a 5:1 safety factor. However, as noted above, there are wide variations internationally in the regulations and practices applying to suspension of sound systems in public places. Although regulations in the United States are generally among the most stringent, safety codes may be even stricter in a few localities (such as those highly prone to earthquakes). In addition, applicable safety codes are open to interpretation: government officials in one location may have a stricter interpretation than another local official, even when operating under the same regulations and in the same legal jurisdiction.

Consequently, users of QuickFly rigging systems should be prepared to take additional safety assurance measures beyond those outlined in this Statement. IN ALL CASES, IT IS THE RESPONSIBILITY OF THE USER TO MAKE CERTAIN THAT ANY MEYER SOUND LOUDSPEAKER SYSTEM IS SUSPENDED IN ACCORDANCE WITH ALL APPLICABLE NATIONAL/FEDERAL, STATE/PROVINCIAL, AND LOCAL REGULATIONS.

Safety Responsibilities “Above the Hook”

In most touring applications of rigging systems, the touring sound provider is normally responsible for ensuring the safety of the suspension system only below the attachment point. The safety and suitability of the attachment point is generally seen as the responsibility of the venue owner or operator. However, this distinction (“above the hook” versus “below the hook”) can be open to interpretation. Touring system operators should double-check to make certain that attachment points are approved and suitably load rated, and that the points used are those identified as such by the venue owner or operator. As an extra precaution, careful inspection of the attachment points is advised before flying, particularly in older venues or those hosting frequent events using large sound and lighting systems. IN ANY CASE, MEYER SOUND QUICKFLY SYSTEMS ARE INTENDED ONLY FOR SUSPENSION FROM APPROVED RIGGING POINTS, EACH KNOWN TO HAVE AMPLE SWL MARGINS FOR THE SYSTEM COMPONENTS SUSPENDED BELOW THEM.

Inspection and Maintenance

The Meyer Sound QuickFly systems are an assembly of mechanical devices, and are therefore subject to wear and tear over prolonged use, as well as damage from corrosive agents, extreme impact, or inappropriate use.

BECAUSE OF THE SAFETY ISSUES INVOLVED, USERS MUST ADOPT AND ADHERE TO A SCHEDULE OF REGULAR INSPECTION AND MAINTENANCE. IN TOURING APPLICATIONS, KEY COMPONENTS MUST BE INSPECTED BEFORE EACH USE. Such inspection includes examination of all load-bearing components for any sign of undue wear, twisting, buckling, cracking, rusting, or other corrosion. In regard to rust and corrosion, the main components of a QuickFly system are either protected by an exterior coating or made from stainless steel, which is impervious to rust and resistant to most corrosive fluids. Nevertheless, normal use and shipping vibrations can wear through the protective coatings, and extremely corrosive fluids (such as battery acid) can cause severe damage with prolonged exposure even to protected parts. Particular attention should be given to screws, bolts, and other fasteners to make certain the fittings are tight and secure. Metal seams and welds should be examined for any sign of separation or deformation. Meyer Sound strongly recommends that written documentation be maintained on each QuickFly system, noting date of inspection, name of inspector, points of system checked, and any anomalies discovered.

Annual Comprehensive Examination and Test Program

In addition to routine checks on the road for touring systems, Meyer Sound also recommends a careful, comprehensive system examination and testing “at home” in the warehouse or other appropriate location at regular intervals. Such at home examinations and tests should occur at least once a year, and should include a careful inspection of each component under ideal lighting conditions, and then a final comprehensive check of the entire system after it has been flown.

If any anomalies or defects are discovered that could possibly affect the safety or integrity of the system, affected parts or subsystems should be replaced in their entirety before that part of the system is flown again.

Replacement Parts

Any component found to be defective, or any safety-related component suspected to be defective, should be replaced with the equivalent, approved part. Parts specific to a QuickFly system should be ordered directly from Meyer Sound. No attempt should be made to substitute what appears to be equivalent or "mostly the same" generic replacements. Some parts used in QuickFly systems are identical to those used in other rigging applications. To the best of our knowledge, most of these suppliers are reputable and their products are reliable. However, Meyer Sound has no way of assuring the quality of products made by these various suppliers. Therefore, Meyer Sound is not responsible for problems caused by components that were not supplied by Meyer Sound.

Training

QuickFly systems are relatively straightforward and easy to use. However, they should only be used by persons trained in the use of loudspeaker rigging systems, who have mastered key points of assembly, rigging and flying.

LINA AND 750-LFC RIGGING OPTIONS

Table 1 summarizes the available rigging options for LINA and 750-LFC loudspeakers.

Table 1: LINA and 750-LFC Rigging Options

Model	Weight	Features	Required Quick-Release Pins	Required Shackles
MRK-750 rigging kit PN 40.271.009.01	25 lb (11.3 kg)	Upgrade kit to allow the 750-LFC to be flown and groundstacked with the MG-LINA//750 grid; includes hardware for the upgrade, captive GuideALinks and quick-release pins.	0.25 in x 0.53 in, (black button) PN 134.039 qty 10 included	—
MG-MINA/LINA/750-LFC multipurpose grid assembly kit (PN 40.207.101.01)	39 lb (17.7 kg)	With some restrictions, flies up to 16 LINA cabinets at a 5:1 safety factor and BGV C1 with some angle restrictions (additional load ratings are possible—use MAPP XT to verify load ratings); supports mixed arrays of LINAs and 750-LFCs without transition hardware; accommodates a variety of pickup configurations with four corner and 11 center pickup points; can also be used for groundstacking.	0.25 in x 0.90 in (black button with 6 in lanyard), PN 134.036, qty 8 included	5/8-inch or 3/4-inch
MG-MINA/LINA/750-LFC multipurpose grid with GLK-750-LFC assembly kit (PN 40.207.101.02)	39 lb (17.7 kg)	With some restrictions, flies up to 16 LINA cabinets at a 5:1 safety factor and BGV C1 with some angle restrictions (additional load ratings are possible—use MAPP to verify load ratings); supports mixed arrays of LINAs and 750-LFCs without transition hardware; accommodates a variety of pickup configurations with four corner and 11 center pickup points; can also be used for groundstacking; includes MG-MINA to 750-LFC Grid Link.	0.25 in x 0.90 in (0.25 in x 0.90 in (black button with 6 in lanyard), PN 134.036, qty 2 included	5/8-inch or 3/4-inch
GLK-750-LFC grid link upgrade kit PN 40.207.301.01	2 lb (0.9 kg)	Includes two grid links to upgrade existing MG-MINA/LINA grids (PN 40.207.101.01). These 2 rear links effectively increase the load rating for the grid when attaching 750-LFCs. Alway use MAPP to verify load ratings.	0.25 in x 0.90 in (black button with 6 in lanyard), PN 134.036, qty 2 included	—
MUB-MINA/LINA mounting U-Bracket kit (PN 40.207.030.01)	5.8 lb (2.63 kg)	Mounts up to five LINA cabinets for front-fill or under-balcony coverage with up to 20 degrees of tilt. Pole-mounts up to two cabinets using the 35MM Pole Stand Adapter (not included).	—	—
MYA-MINA/LINA Yoke kit (PN 40.207.104.01)	12.9 lb (5.85 kg)	Suspends arrays of up to three LINA cabinets from a single point and pole-mounts, using the 35MM Pole Stand Adapter (not included), up to two cabinets on top of a 750-LFC. The yoke includes two bracketing options: the MPA-2 for attaching to two cabinets, and the MPA-3 for attaching to one or three cabinets.	—	—

Table 1: LINA and 750-LFC Rigging Options

MVP motor Vee plate kit PN 40.215.184.01	20 lb (9.1 kg)	Fine tunes the horizontal aim of arrays; compatible with MTG-LEO-M, MTG-LYON, MTG-1100, MG-LEOPARD/900, and MG-MINA/LINA/750-LFC grids.	—	3/4-inch or 7/8-in
PBF-LINA pull-back frame kit PN 40.271.080.01	4 lb (1.8 kg)	Attaches to bottom of LINA and 750-LFC arrays (to the bottom cabinet) and provides pull-back for extreme array downtilt	0.25 in x 0.90 in (black button with 6 in lanyard), PN 134.036, qty 2 included	1/2-in
MCF-MINA/LINA caster frame kit (PN 40.207.102.01)	28 lb (12.7 kg)	Safely transports up to five LINA cabinets, making it easy to assemble and disassemble arrays in blocks of five cabinets	0.25 in x 0.90 in (black button with 6 in lanyard), PN 134.036, qty 4 included	—
MCF-750 (rigging) caster frame kit PN 40.271.070.02	34 lb (15.4 kg)	Safely transports up to three 750-LFC cabinets. This caster frame is for cabinets with equipped with MRK-750 rigging.	0.25 in x 0.90 in (black button with 6 in lanyard), PN 134.036, qty 4 included	—
MCF-750 (no rigging) caster frame kit PN 40.271.070.03	28.7 lb (13.0 kg)	Safely transports up to three 750-LFC cabinets. This caster frame is for cabinets without rigging.	no pins	—
35MM Pole Stand Adapter assembly kit PN 40.010.971.01	0.36 lb (0.16 kg)	This large base stand adapter can be used to mount the MYA-MINA/LINA Yoke or MUB-MINA/LINA on a pole to allow easy tilting of a MINA or LINA.	—	—
MPK-POLE-35MM-M20 Adjustable Pole Mount kit (PN 40.010.973.01)	8 lb (3.62 kg)	Adjustable length 927–1524 mm (36.5–60 in), 35 mm (1.375 in) pole with assisted lift. Lower shaft fits 35 mm cups or use the removable M20 threaded lug for added stability. Upper shaft includes a PAS-M20 Adapter Sleeve to fit loudspeakers with 35 mm and M20 internal pole mounts onto a 35 mm speaker stand. (Can also buy the PAS-M20 Adapter Sleeve separately). Additional 35 mm to 38 mm (1.5 in) adapter included.	—	—

Rigging Example, LINA Array with Pull-Back

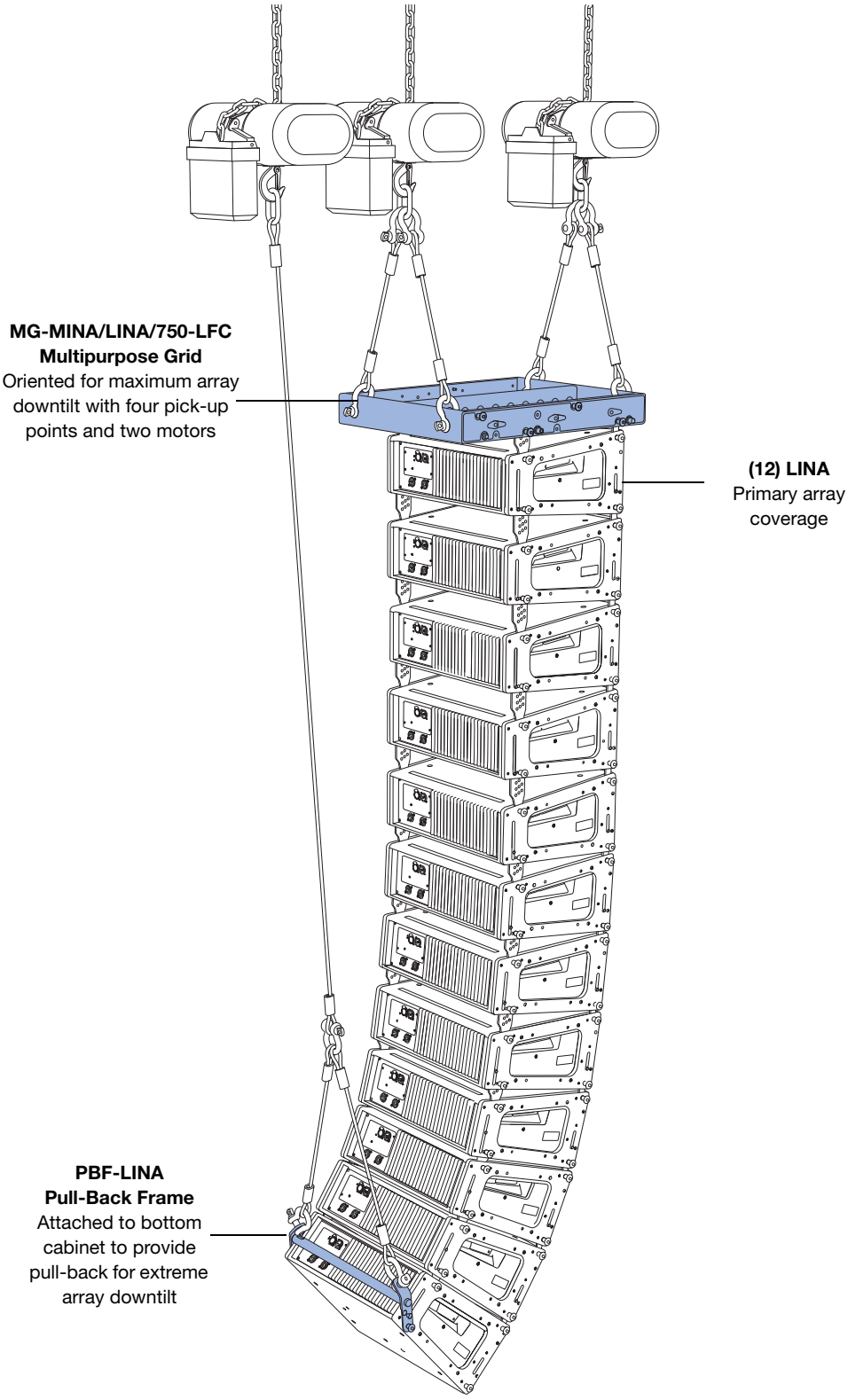

Rigging Example, Mixed Array with 750-LFCs and LINAs

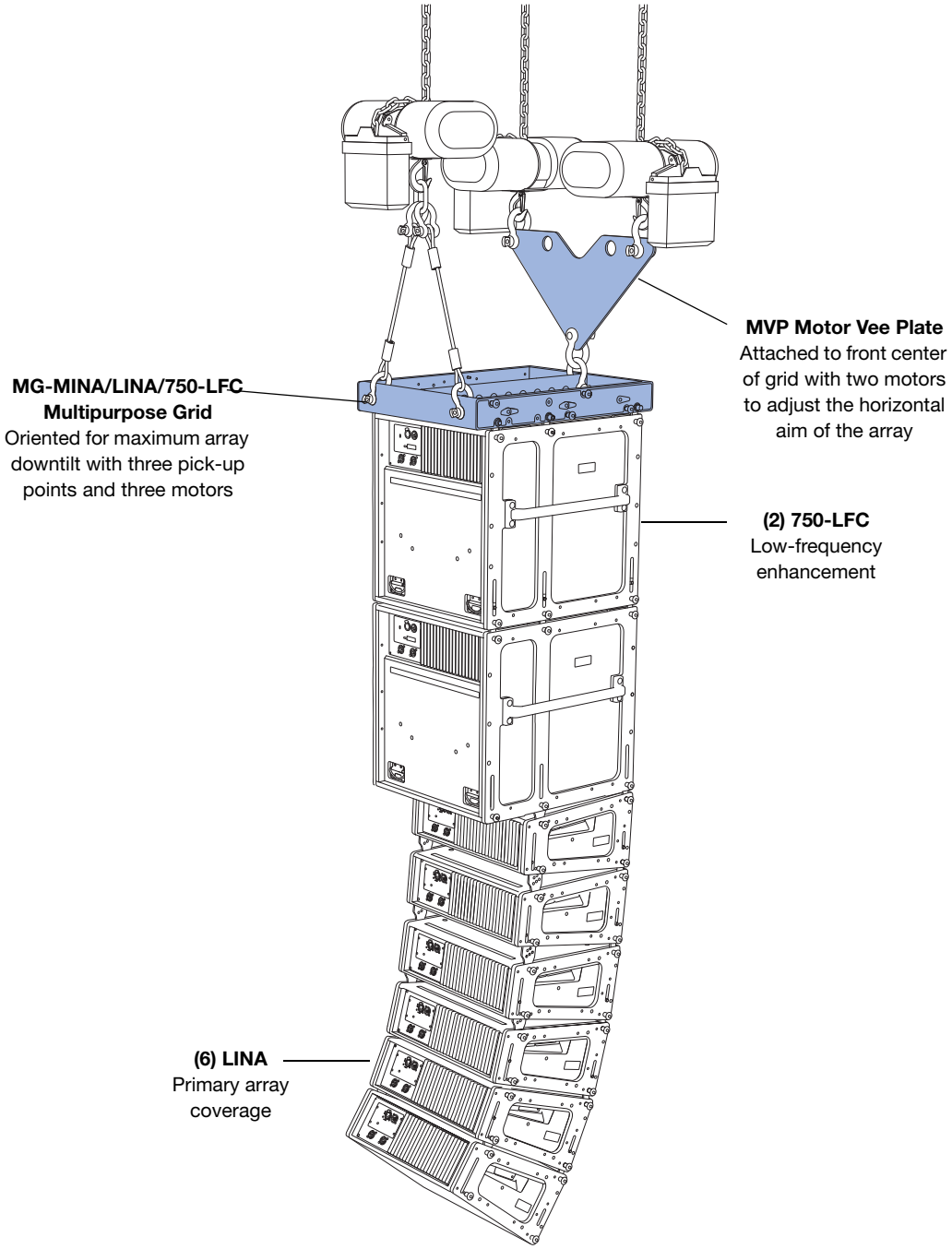

CHAPTER 2: MRK-750 RIGGING UPGRADE KIT

The optional MRK-750 rigging kit allows the 750-LFC to be flown and groundstacked with the MG-MINA/LINA/750-LFC multipurpose grid. The kit also allows 750-LFCs to be flown and groundstacked with LINA with no transition hardware. The rigging kit is available as a factory-installed option or as a field upgrade and uses rugged GuideALinks and intuitive quick-release pins to securely link adjacent loudspeakers in flown and groundstacked array configurations.

MRK-750 RIGGING UPGRADE KIT CONTENTS

Table 2: MRK-750 Rigging Upgrade Kit (PN 40.271.009.01)

	Quantity	Part Number	Item
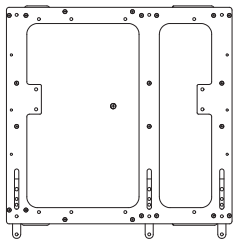	1	45.271.050.01	MRK-750 rigging end frame (right)
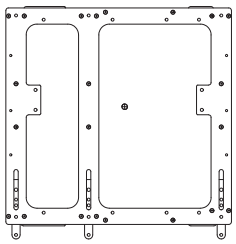	1	45.271.051.01	MRK-750 rigging end frame (left)
	16	101.744	1/4-20 x 1.5 in btn head screw, black oxide
	16	101.244	1/4-20 x 1.5 in btn head screw, stainless steel
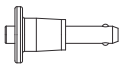	10	134.039	0.25 in x 0.53 in quick-release pin (black button)
	1	640.096	Loctite Medium Strength Threadlocker

INSTALLING THE MRK-750 RIGGING UPGRADE KIT

To install the MRK-750 rigging upgrade kit:

1. Remove the standard end frames and temporarily remove the grille frame (Figure 1):

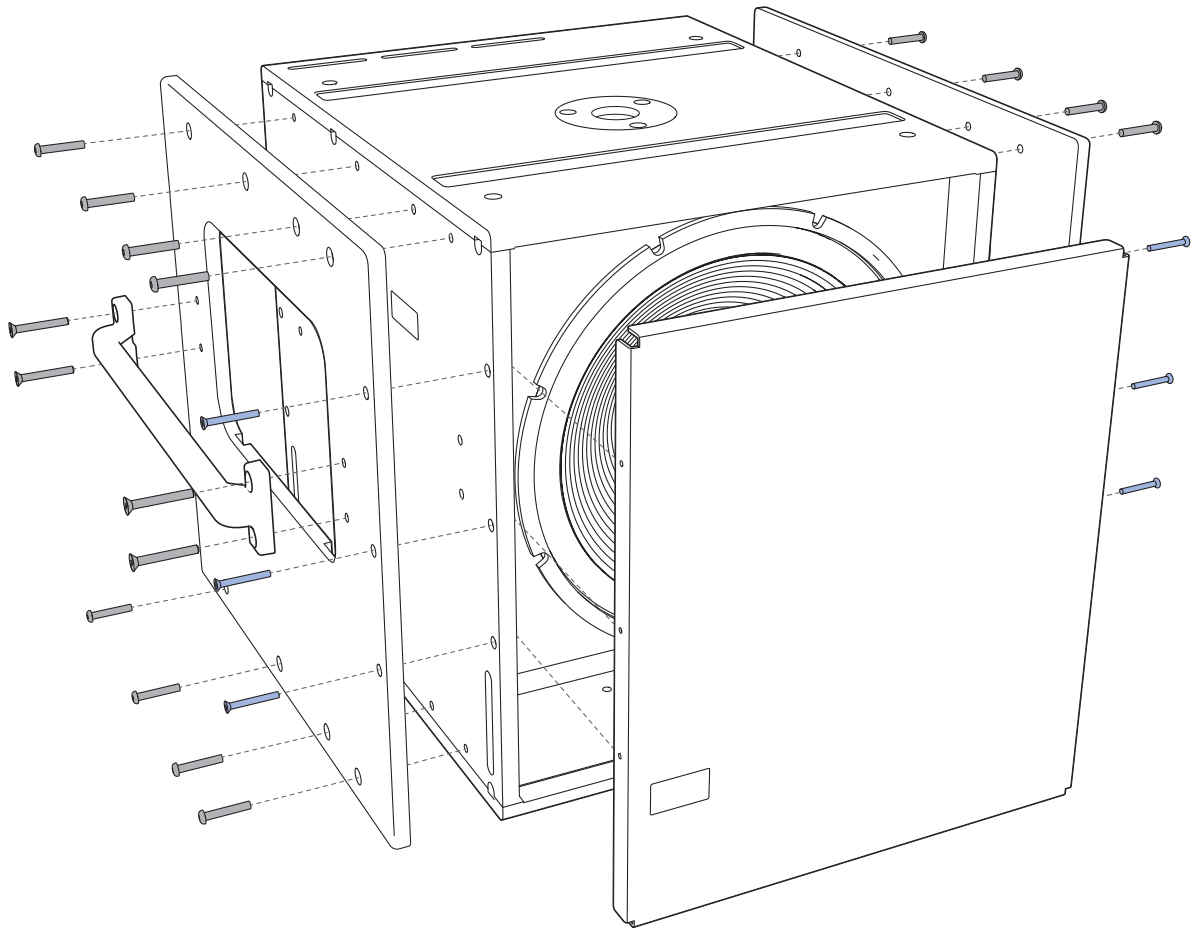

Figure 1: Removing Existing End Frames and Grille

- Use a Phillips screwdriver to remove the six 10-32 x 1.75-inch flathead screws (three each side) securing the grille frame to the cabinet front. Remove the grille frame.
- Use a Phillips screwdriver to remove the eight 1/4-20 x 2-inch flathead screws (four each side) securing the handles to the end frame. Remove the handle.
- Use a hex screwdriver to remove the (16) 1/4-20 x 1.5-inch button head screws (eight each side) from the cabinet sides. Remove the cabinet sides.
- Set the 16 removed button head screws aside. They will not be used for the MRK-750 end frames.

2. Attach the MRK-750 end frames and the previously removed grille frame:

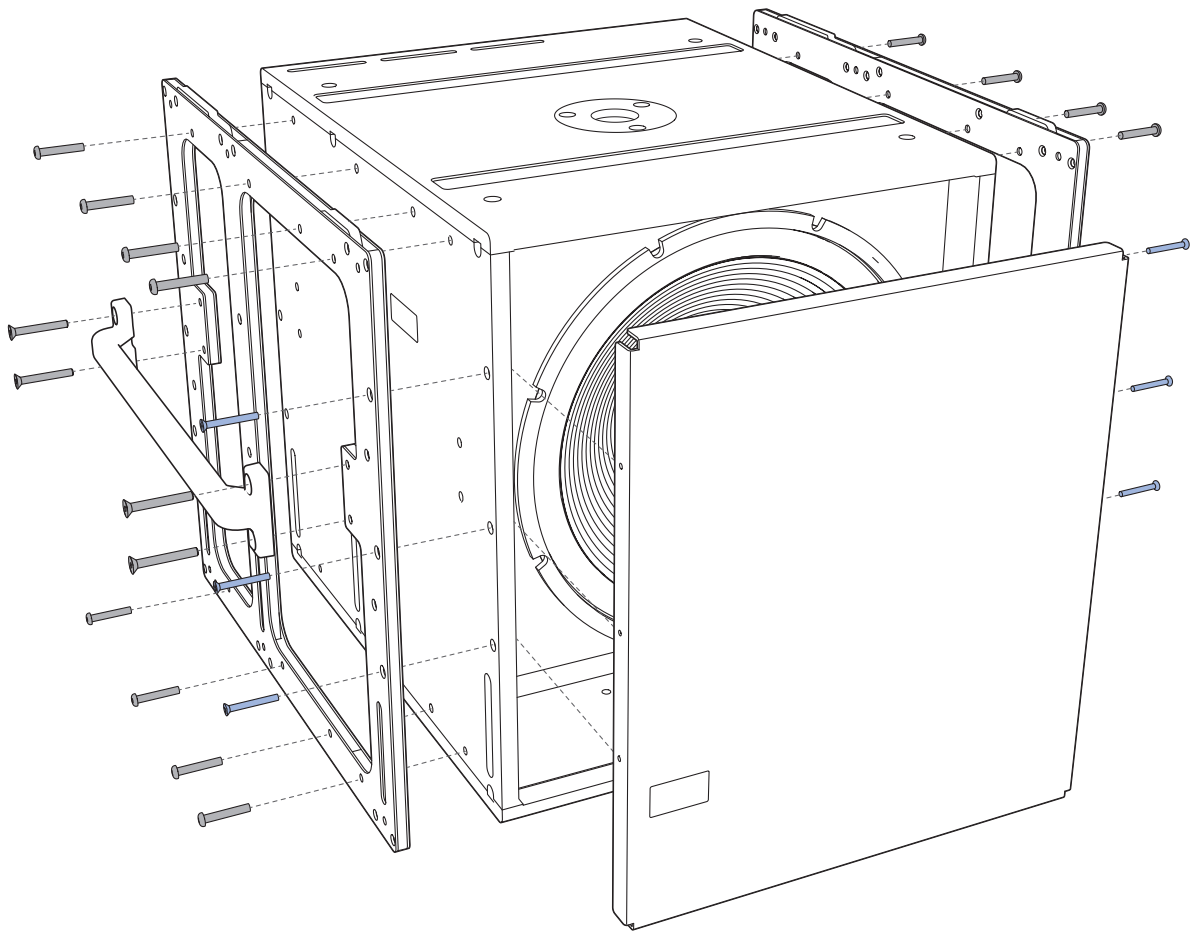

Figure 2: Installing MRK-750 end frames and grille

- Use a torque wrench to secure the MRK-750 end frames to the cabinet with the eight 1/4-20 x 1.5-inch button head screws (PN 101.744) (four top and four bottom). Apply one or two drops of Loctite to each of the button head screws before installing them.

  NOTE: For all-weather, outdoor installations, use the silver weather-protected button head screws (PN 101.244).

  CAUTION: Make sure the screws are securely tightened but do not over-tighten them. Approximately 40 inch-pounds of torque is recommended.

- Use a Phillips screwdriver to secure the handles to the end frames, reusing the eight 1/4-20 x 2-inch flathead screws (four each side) removed earlier. Apply one or two drops of Loctite to each of the flathead screws before installing them. Approximately 40 inch-pounds of torque is recommended.
- Use a Phillips screwdriver to secure the grille frame to the cabinet with the six 10-32 x 1.75-inch flathead screws (three each side). Apply one or two drops of Loctite to each of the flathead screws before installing them.

3. Insert the eight loudspeaker quick-release pins (0.25 in x 0.53 in, black button, PN 134.039) in the cabinet corners (four each side).

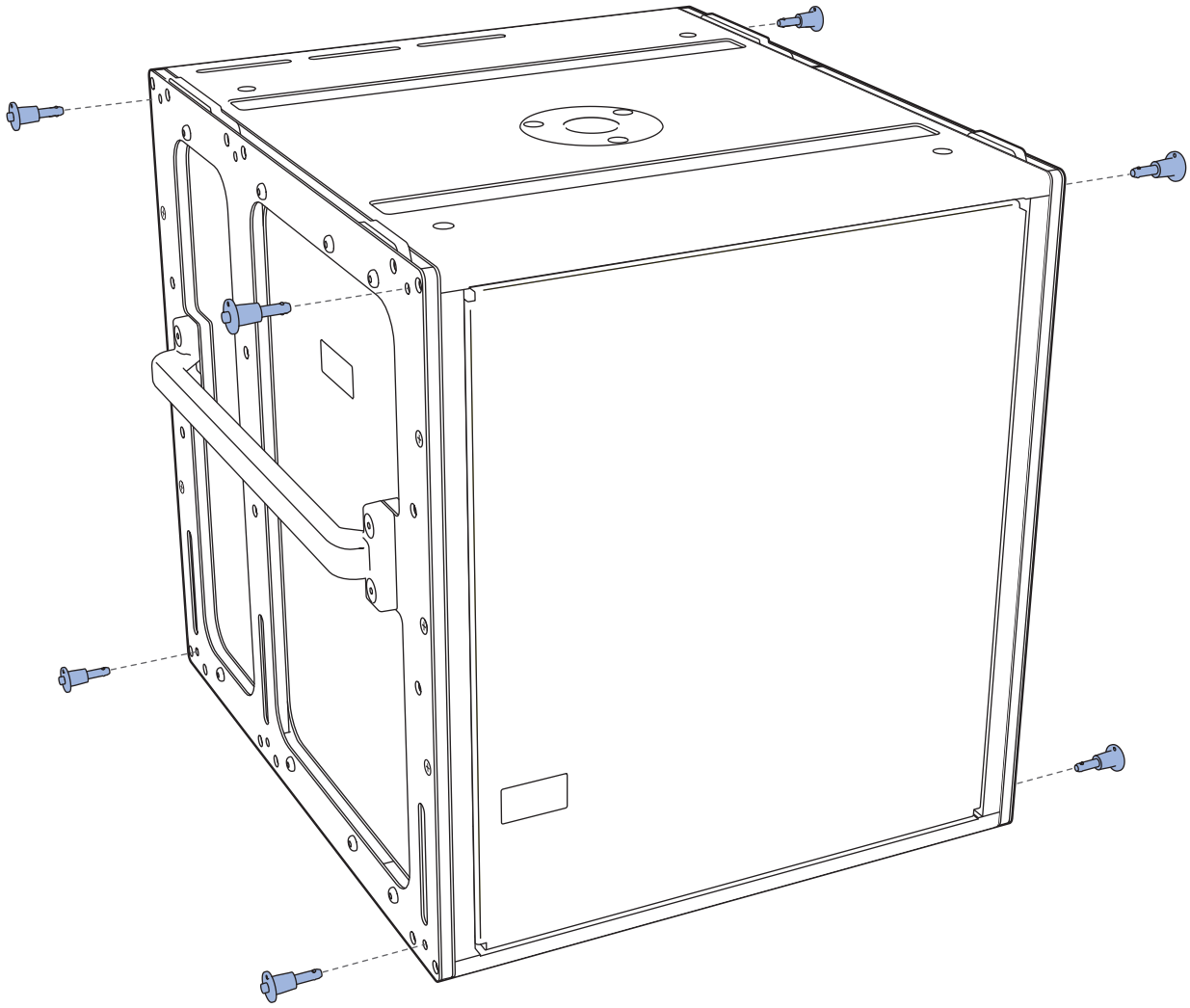

Figure 3: Installing Quick-Release Pins

CHAPTER 3: 750-LFC GROUNDSTACKS AND CARDIOID ARRAYS

GROUNDSTACKING 750-LFC LOUDSPEAKERS (WITHOUT GRID)

750-LFCs can be groundstacked up to three units high, with or without the MRK-750 rigging kit. Protective plastic skids that align with the slots on the cabinet top are included on the bottom of the 750-LFC cabinet. Units can be stacked normally or reversed for cardioid configurations. When groundstacking 750-LFCs, make sure the skids for each unit align with the slots in the cabinet tops. When equipped with the MRK-750 rigging kit, the 750-LFC can be groundstacked on the MG-MINA/LINA/750-LFC grid with LINAs for mixed groundstacks (see Chapter 9, “Groundstacking with the MG-MINA/LINA/750-LFC Grid”).

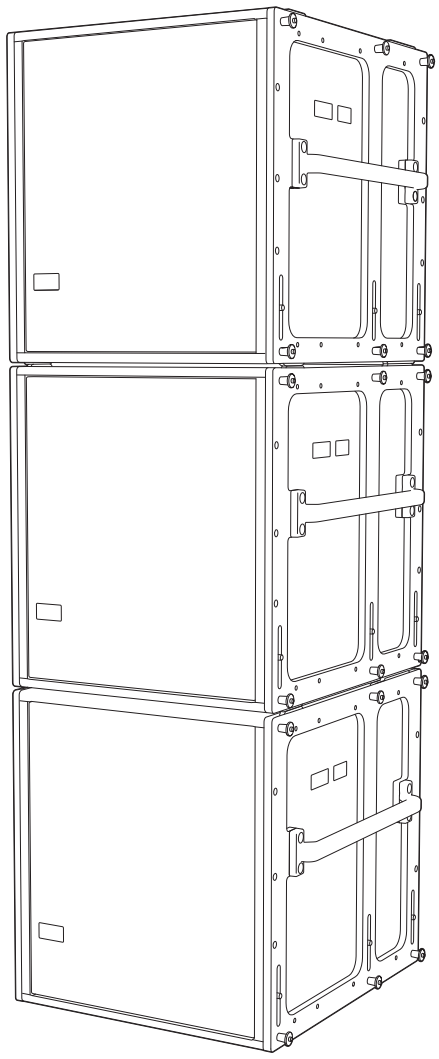

Figure 4: 750-LFC Groundstack (With Rigging)

CAUTION: As a safety precaution and to avoid tipping, a maximum of three cabinets is supported for groundstacked 750-LFC.

NOTE: 750-LFC need not be equipped with the MRK-750 rigging kit for secure groundstacking of up to three cabinets.

750-LFC CARDIOID ARRAYS

The 750-LFC can be configured in cardioid arrays to reduce undesirable low frequency leakage behind the loudspeakers. The loudspeaker's linearity ensures that cardioid patterns behave accurately even at very high levels. Cardioid arrays are achieved by placing three units coplanar to each other (in either a groundstacked or flown array) with one unit facing the opposite direction (Figure 5). Apply signal processing to the rear-facing unit, polarity opposite of the front-facing units and relative to the front-facing units, an additional delay of 2.9 ms, which yields output that cancels output from the other loudspeakers normally present behind the units.

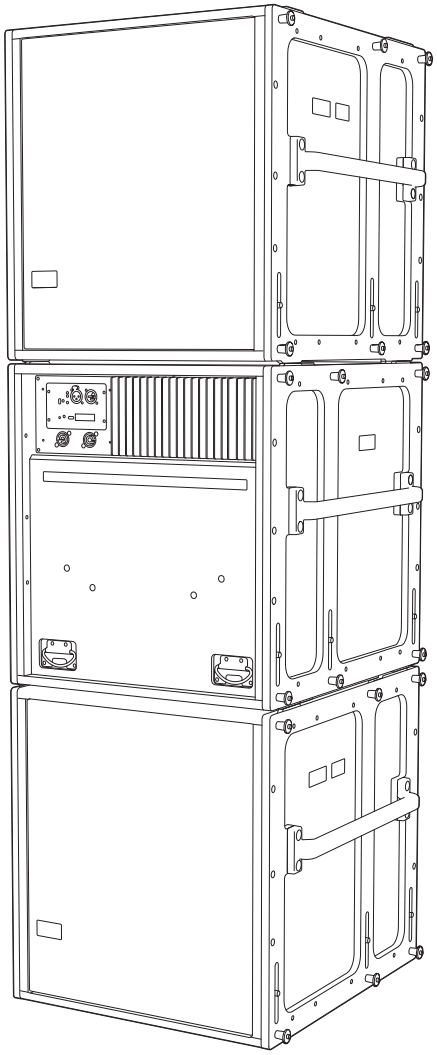

Figure 5: 750-LFC Cardioid Groundstack (Without Rigging)

NOTE: 750-LFCs need not be equipped with the MRK-750 rigging kit for groundstacked cardioid configurations of up to three cabinets.

NOTE: 750-LFC cardioid arrays can also be flown from the MG-MINA/LINA/750-LFC multipurpose grid. For more information, see Chapter 5, "MG-MINA/LINA/750-LFC Grid."

NOTE: To achieve an accurate cardioid pattern, you must use Meyer Sound's MAPP prediction software. Use MAPP to calculate the appropriate ratio of forward- to rear-facing loudspeakers, as well as the processor settings for polarity. A myriad of possible cardioid and directional configurations can be calculated and predicted with MAPP. For more information, contact Meyer Sound Technical Support.

CHAPTER 4: LOUDSPEAKER GUIDEALINKS

LINA loudspeakers are compatible with Meyer Sound's QuickFly® rigging system, a comprehensive collection of rigging, flying, and mounting hardware. LINA's captive GuideALinks allow cabinets to be linked at various splay angles for flying, groundstacking, and transport. The heavy-duty GuideALinks allow for easy adjustment of array tilts, eliminating the need for pull-back straps in flown configurations. M6 attachment points provide connections to the optional MPA-2 and MPA-3 brackets to allow an attachment to an MYA-MINA/LINA mounting yoke, an MUB-MINA/LINA U-bracket, and indirectly to an MPK-POLE using the 35MM Pole Stand Adapter.

LINA GUIDEALINKS

Each LINA loudspeaker is equipped with four captive GuideALinks that link to adjacent units in flown and groundstacked arrays. Located at the bottom corners of the end plates, the GuideALinks extend and retract with knobs and are secured with quick-release pins.

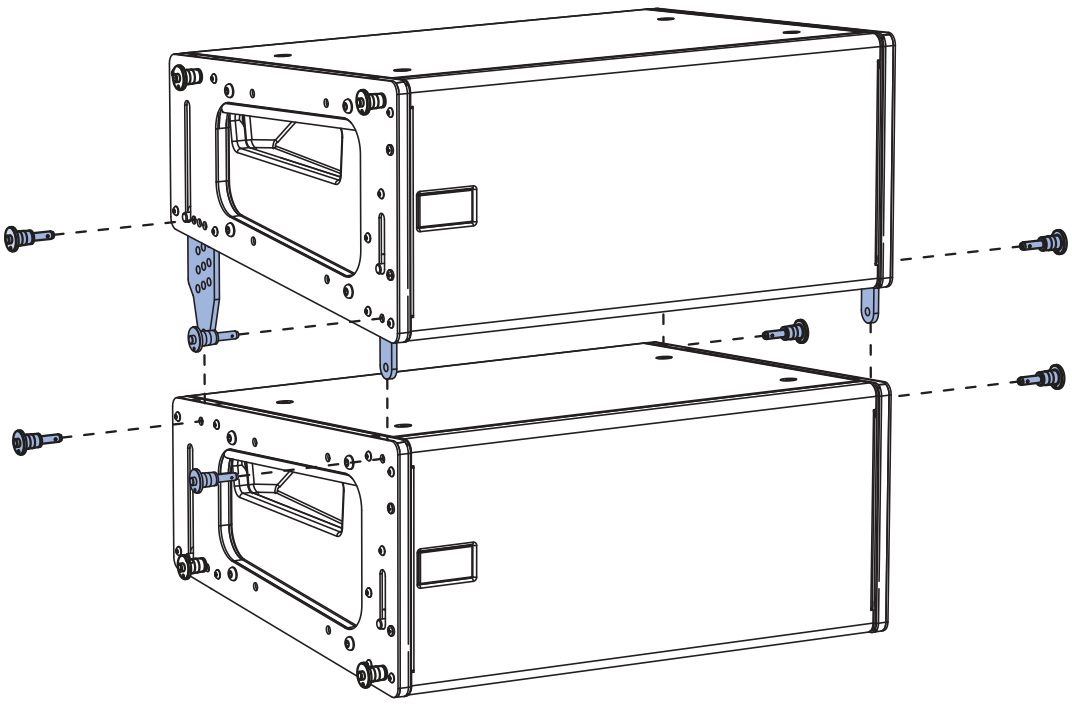

Figure 6: LINA GuideALinks with Quick-Release Pins

When linking LINAs, two quick-release pins are required for each GuideALink: one to secure the position of the link in the top unit, and one to secure the link to the linked bottom unit. Eight ***loudspeaker*** quick-release pins (0.25 in x 0.53 in, black button, PN 134.039) are included with each LINA.

⚠ **CAUTION:** Make sure to secure the LINA GuideALinks with the included quick-release pins. GuideALink knobs are for extending and retracting the links and should not be used to support the weight (without the pins) of the loudspeaker when fully extended.

Front GuideALinks

The front GuideALinks act as a pivot point between linked LINAs, with the splay angle between the units determined by the rear GuideALink positions. When stowing front GuideALinks, the knob is positioned at the top of the slot.

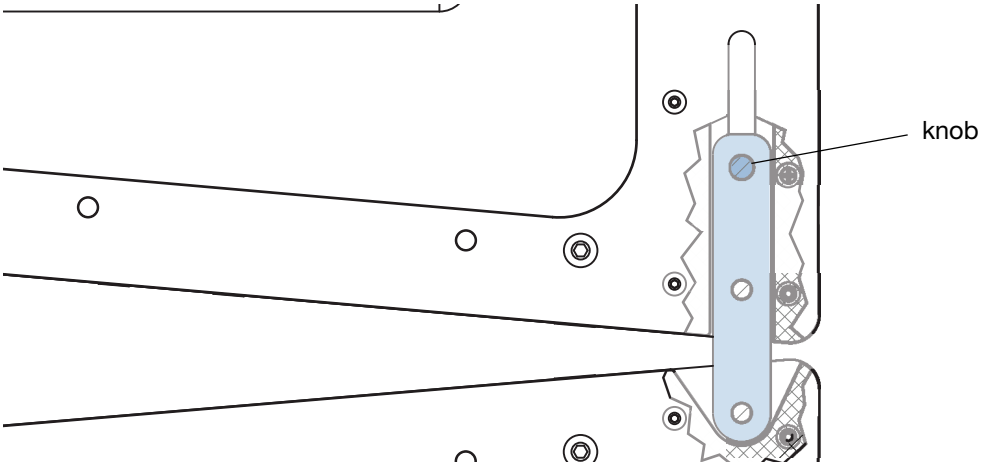

Figure 7: LINA Front GuideALinks

Rear GuideALinks

The rear GuideALinks permit splay angles between linked LINAs at 0.0, 0.5, and 1–11 degrees in 1-degree increments. The rear GuideALink includes three rows of holes corresponding to the available splay angles (see Figure 10 on page 15) that are secured in one of three pinning positions at the bottom of the unit.

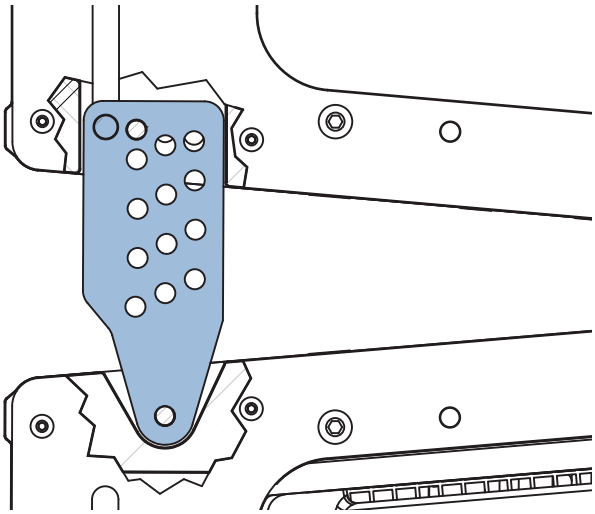

Figure 8: LINA Rear GuideALinks

The label in the lower rear corner of the end frame shows the splay angle between LINAs given a GuideALink pinning position. With the knob at the bottom, the splay angle is 0 degrees. As the knob is moved up, the angle increases (all the way to 11 degrees). To stow the link, move the knob all the way to the top of the slot.

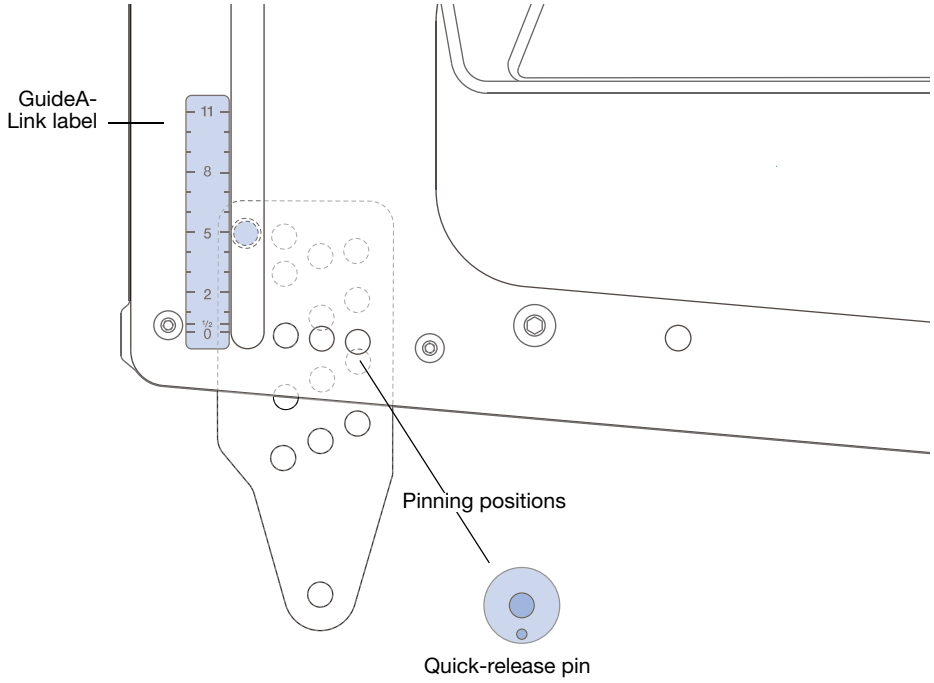

Figure 9: LINA Rear GuideALink Label and Pinning Positions

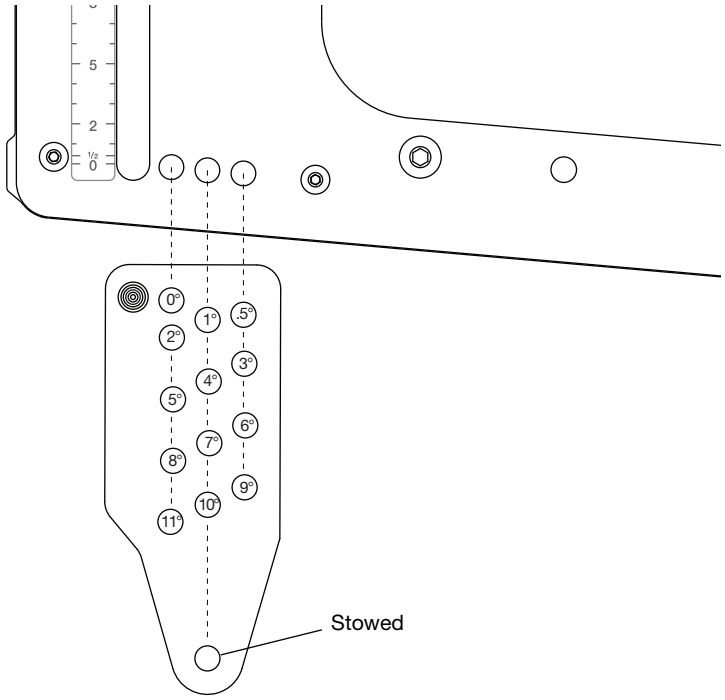

Figure 10: LINA Rear GuideALink, Splay Angles for Linked LINAs

NOTE: For Ultra-weatherized versions of the LINA (see “ULTRA Weather Protection Version” on page 83), the 11° position is not available.

NOTE: The splay angles listed on the GuideALink label are for relative angles between the center axes of the linked units. For example, setting the GuideALink to “5” yields a 5-degree downtilt of the lower unit relative to the upper unit. How the loudspeakers relate to the floor, stage, and seating angles in the venue depends on the orientation of the MG-MINA/LINA/750-LFC grid, the angles of the loudspeakers in the array above them, whether they are flown or ground-stacked, and other factors. MAPP can be used to calculate optimum splay angles for loudspeakers and to predict coverage patterns for arrays.

NOTE: Optimal acoustical performance for LINA arrays is achieved by using the appropriate number of units and appropriate splay angles to meet the coverage requirements of the venue. You can use MAPP to verify designs and rigging configurations.

750-LFC GUIDEALINKS

When equipped with the MRK-750 rigging kit, the 750-LFC includes six captive GuideALinks and six mating link slots that link to adjacent units in flown and groundstacked arrays. Located at the bottom of the cabinet, GuideALinks drop down and into the link slots of the cabinet below it. GuideALinks extend and retract with knobs and are secured with two quick-release pins: one each in the top and bottom cabinets. GuideALinks accommodate reversed units for cardioid arrays. The MRK-750 rigging kit includes ten loudspeaker quick-release pins (0.25 in x 0.53 in, black button, PN 134.039).

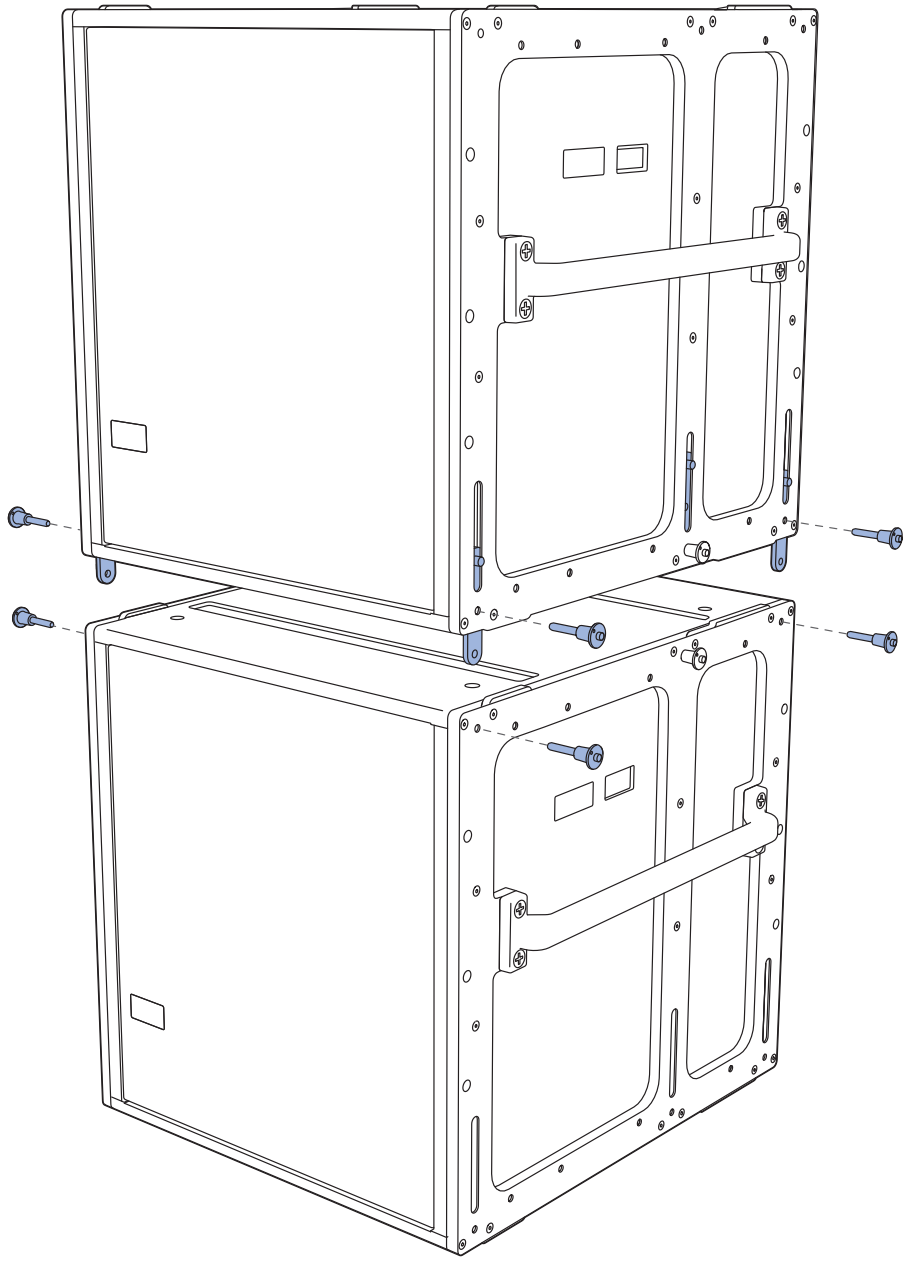

Figure 11: 750-LFCs with MRK-750 Rigging Kit, GuideALinks and Quick-Release Pins

GLK-750 GRID LINK KIT

The original MG-MINA grid (PN 40.207.101.01) includes only the front and the middle links that allow flying MINAs or LINAS from it. We recommend NOT using the middle link to attach the 750-LFC. Using the middle link halves the load-rating compared to using the front and rear attachment points.

We recommend using the updated version MG-MINA/LINA/750-LFC (PN 40.207.101.02) to hang 750-LFCs. You can also update existing grids with the GLK-750-LFC grid link upgrade kit (PN 40.207.301.01), which includes the two rear links, installation hardware, and installation instructions (PN 17.207.301.01 B2). Using the rear links, instead of the middle, effectively increases the load rating for the grid when attaching 750-LFCs.

⚠ **CAUTION:** Always use MAPP to verify load ratings. Under no circumstance should all six links be used at the same time, as this approach will not add any load capability. In fact, the load capacity will decrease by about half of that provided by the rear links because it cannot be determined which links are actually under tension.

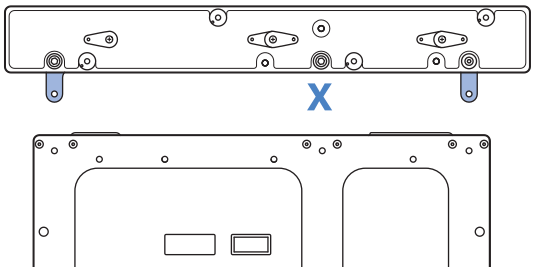

Figure 12: MG-MINA/LINA/750-LFC rigging grid

The 750-LFC's GuideALinks accommodate both 750-LFCs and LINAs without transition hardware. The front and rear GuideALinks are used when flying the 750-LFC below the MG-MINA/LINA/750-LFC grid, or when flying it below another 750-LFC (Figure 13). The configuration of the 750-LFC's GuideALinks, front and rear, determines its splay angle. The 750-LFC's four corner link slots on the top of the cabinet accept GuideALinks from flown 750-LFCs. The front and middle link slots accept LINA GuideALinks when flying LINAs below the 750-LFC (Figure 13). The configuration of LINA's GuideALinks, front and rear, determines its splay angle.

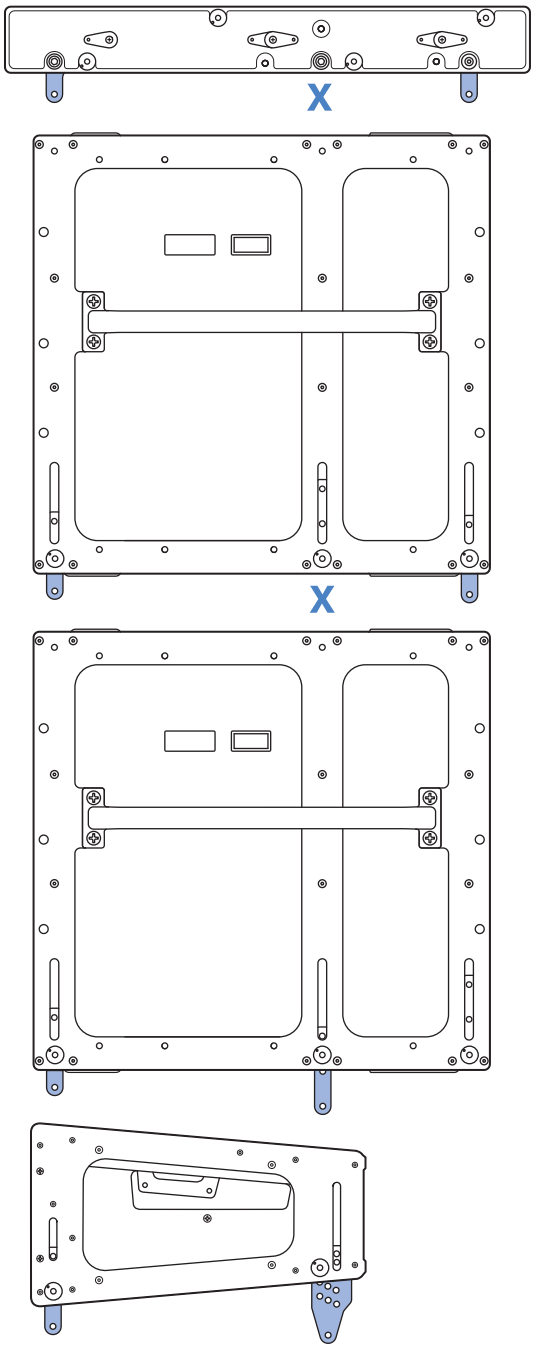

Figure 13: FlownMG-MINA/LINA/750-LFC, 750-LFC and LINA with GuideALink Attachments

The 750-LFC's front and middle links insert into slots in the MG-MINA/LINA/750-LFC grid when groundstacking the 750-LFC. The 750-LFC's front and middle GuideALinks slots are used when stacking LINAs on top of the 750-LFC (Figure 14).

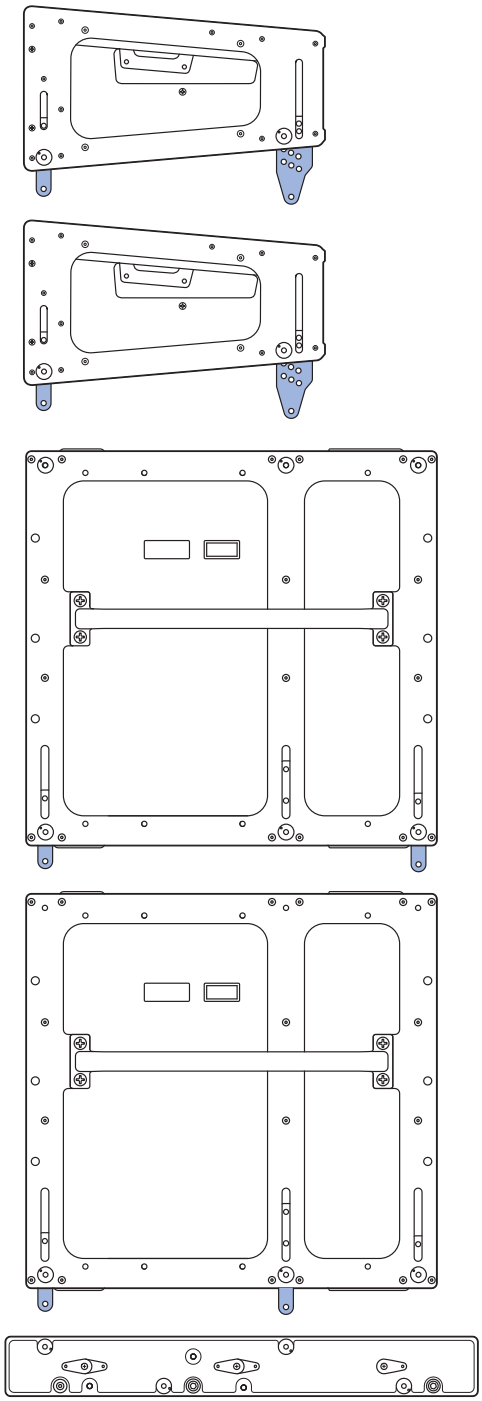

Figure 14: Groundstacked LINA and 750-LFC with GuideALink Attachments

⚠ **CAUTION:** Do not use the 750-LFC's middle GuideALinks when flying the 750-LFC below the MG-MINA/LINA/750-LFC grid or when flying below another 750-LFC. Always use the front and rear GuideALinks when flying the 750-LFC.

750-LFC Splay Angles

The front and rear GuideALinks attach at angles of 0, 1.5, 3.25 or 4.75 degrees, allowing curved 750-LFC arrays. Because the cabinet's front and rear GuideALinks are symmetrical, the curved arrays can also include cardioid configurations.

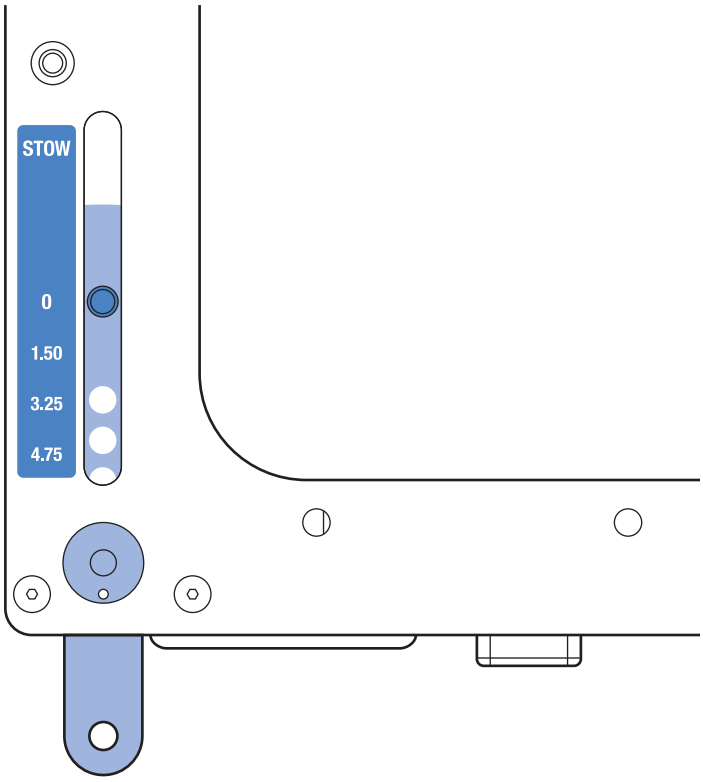

Figure 15: 750-LFC Front GuideALinks Label

The labels next to the front and rear GuideALinks indicate the splay angle between cabinets (when the opposing links are set to 0 degrees). As the links are moved down, the splay angle increases. To stow the GuideALinks, move them all the way up to STOW and pin them.

NOTE: Curved 750-LFC arrays do not provide directionality for low-frequency content. The curved array capability of the 750-LFC is provided to minimize unwanted high frequency reflections from adjacent mid-high arrays and to aesthetically mimic the curvature in adjacent mid-high arrays.

CHAPTER 5: MG-MINA/LINA/750-LFC GRID

The MG-MINA/LINA/750-LFC grid flies LINA arrays of up to 16 cabinets at a 5:1 safety ratio. (Additional load ratings are possible; use MAPP to verify load ratings.) The grid, which can also be used for groundstacking arrays, accommodates a variety of pickup configurations with two front and two rear pickup points and 11 center pickup points.

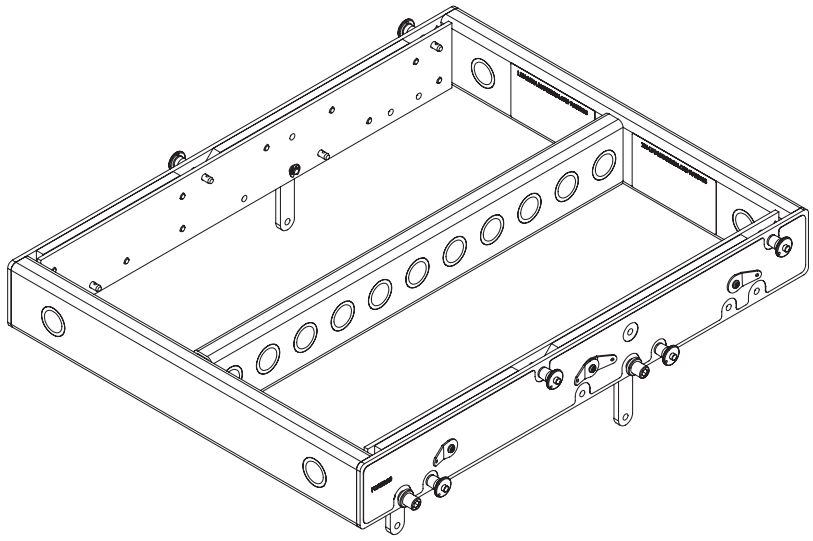

Figure 16: MG-MINA/LINA/750-LFC Grid

The MG-MINA/LINA/750-LFC grid has four captive links, two per side, that attach to the top LINA of flown arrays. The configuration of the links and orientation of the grid (for either maximum uptilt or maximum downtilt) determine the angle of the attached LINA. The grid links are easily stowed for transport and groundstacked configurations.

The MG-MINA/LINA/750-LFC grid includes eight ***grid*** quick-release pins (0.25 in x 0.90 in, black button with 6 in lanyard, PN 134.036): four for securing the four grid links, and four for securing LINA groundstacks to the top of the grid.

CAUTION: Always use the grid quick-release pins included with the MG-MINA/LINA/750-LFC grid to secure its links, as well as to secure groundstacked LINAs to the grid. Do not use the loudspeaker quick-release pins (included with LINA) in the grid as they are shorter and will not lock into place.

TIP: The MG-MINA/LINA/750-LFC grid can travel installed on top of LINA stacks.

MG-MINA/LINA/750-LFC Grid Kit Contents

Table 3: PN 40.207.101.01

	Quantity	Part Number	Description
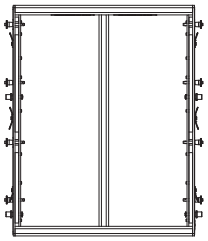	1	45.207.126.01	MG-MINA/LINA/750-LFC grid
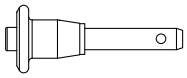	8	134.036	0.25 in x 0.90 in (black button with 6 in lanyard)

MG-MINA/LINA/750-LFC Grid Dimensions

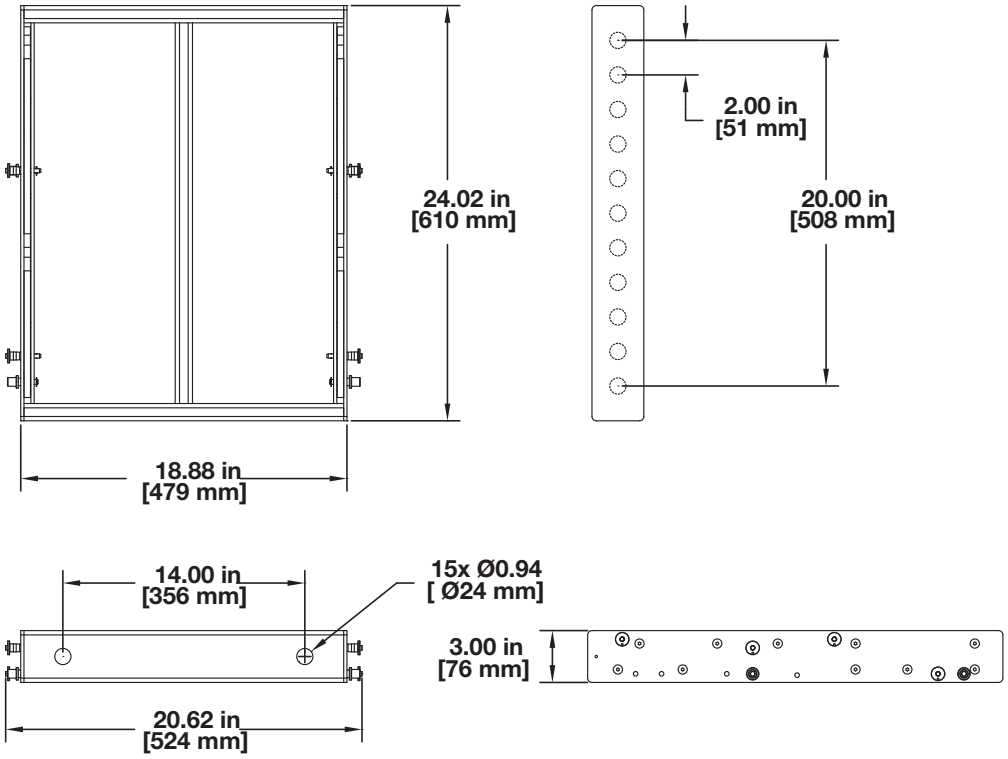

Figure 17: MG-MINA/LINA/750 Grid Dimensions

MG-MINA/LINA/750-LFC Grid Weight: 34.7 lbs (15.74 kg)

MG-MINA/LINA/750-LFC GRID LOAD RATINGS

The following table lists the maximum suspended weight for the MG-MINA/LINA/750-LFC grid.

Table 4: MG-MINA/LINA/750-LFC Load Ratings

Orientation	Safety Factor	Maximum Suspended Weight	Maximum Number of LINA Cabinets	Maximum Grid Tilt
Maximum Downtilt	5:1	688 lbs (312 kg)	16	±60°
Maximum Uptilt	5:1	688 lbs (312 kg)	16	±60°

Requirements for MG-MINA/LINA/750-LFC Grid Load Ratings

The load ratings in Table 4 are only supported when the following requirements are observed:

- Any combination of grid pickup points can be used. However, if a bridle is used between pickup points, the bridle angle at the apex must not be greater than 90 degrees.
- Using a bridle leg length that results in an apex angle wider than recommended reduces the load rating and may damage the MG-MINA/LINA/750-LFC grid.
- The array should not be lifted from points other than those on the grid.
- The grid tilt should not be greater than the one achieved by the natural rotation of the array.
- The grid tilt should not be greater than the angles in Table 4 with respect to the horizontal. Negative angles are downtilt and positive angles are uptilt.
- The maximum number of LINA loudspeakers that can be flown is based on a weight of 43 lbs (19.5 kg) for each LINA cabinet.
- The maximum load ratings regard the MG-MINA/LINA/750-LFC grid and flown loudspeakers as a system, including the links and pins. Thus, the maximum stress point could change from one element to another in the system.
- The weight of any additional items suspended with the array, such as downfill loudspeakers, transition accessories, and cable, must be considered when calculating the maximum load.
- The weight of the MG-MINA/LINA/750-LFC grid has not been included in Table 4. The table rates the maximum load for the grid. Pickup points and motors that will suspend the grid must be rated to the support the total weight of the grid (34.7 lbs, 15.74 kg) and its suspended loudspeakers (see Table 4).
- Always use properly rated rigging hardware. 5/8-inch shackles are recommended for the MG-MINA/LINA/750-LFC pickup points.

CHAPTER 6: FLYING ARRAYS

MG-MINA/LINA/750-LFC GRID ORIENTATIONS FOR FLOWN CONFIGURATIONS

The orientation of the MG-MINA/LINA/750-LFC grid allows placement of the array's center of gravity closer to the front or rear of the grid, thereby determining the maximum downtilt or uptilt available for the flown array.

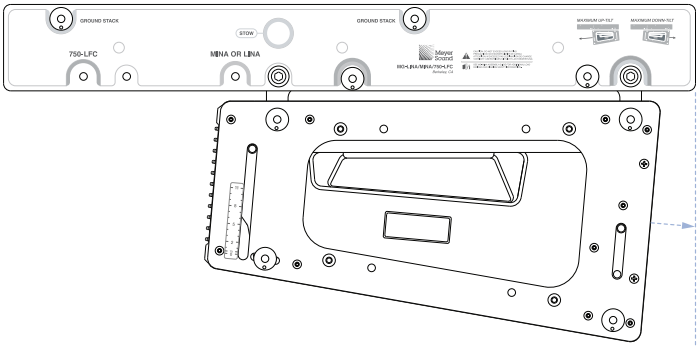

Figure 18: LINA Closer to Front of MG-MINA/LINA/750-LFC for Maximum Array Downtilt

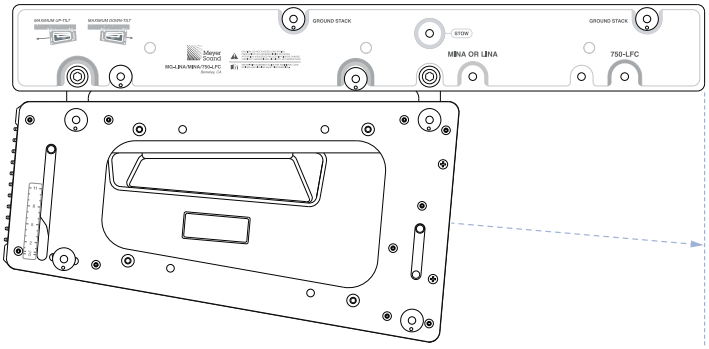

Figure 19: LINA Closer to Rear of MG-MINA/LINA/750-LFC for Maximum Array Uptilt

MG-MINA/LINA/750-LFC Oriented for Maximum Array Downtilt

When the MG-MINA/LINA/750-LFC grid is oriented so the loudspeaker mounts closer to the front of the grid, the array's center of gravity moves closer to the front of the grid. The grid's rear pickup points can then be used to achieve maximum array downtilt. The label on the MG-MINA/LINA/750-LFC shows this configuration as "Maximum Downtilt." Using the maximum downtilt orientation, the LINA at the top of the array can be attached relative to the grid at 0 and –5 degree (downtilt).

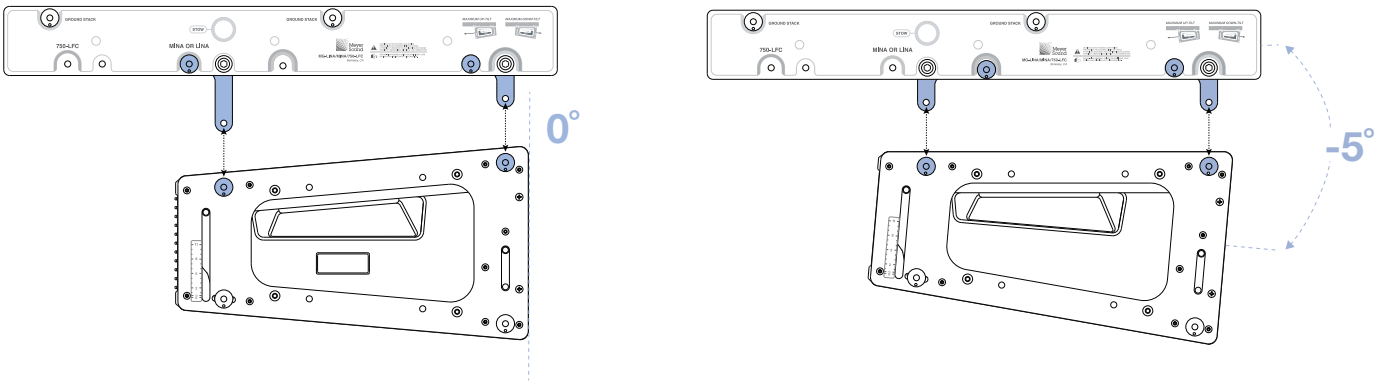

Figure 20: MG-MINA/LINA/750-LFC Grid, Maximum Downtilt Orientation, 0 and –5 Degrees

MG-MINA/LINA/750-LFC Oriented for Maximum Array Uptilt

When the MG-MINA/LINA/750-LFC grid is oriented so the loudspeaker mounts closer to the rear of the grid, the array's center of gravity moves closer to the rear of the grid. The grid's front pickup points can be used to achieve maximum array uptilt. The label on the MG-MINA/LINA/750-LFC shows this configuration as "Maximum Uptilt." With the maximum uptilt orientation, the LINA at the top of the array can be attached relative to the grid at –5 and –10 degrees (downtilt).

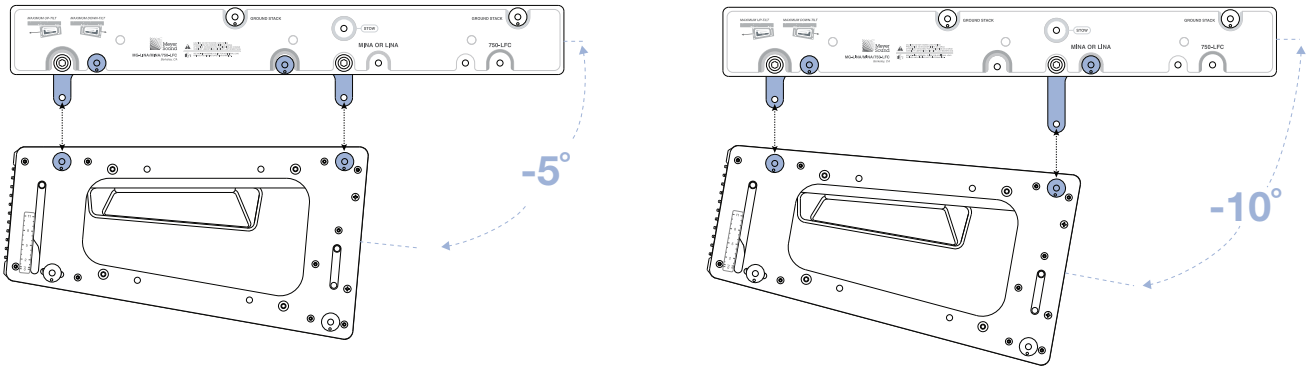

Figure 21: MG-MINA/LINA/750-LFC Grid, Maximum Uptilt Orientation, –5 and –10 Degrees

TIP: The tilt for the MG-MINA/LINA/750-LFC and the array below it can be adjusted with chain motors, or by using differing lengths of wire rope or SpanSets.

MG-MINA/LINA/750-LFC PICKUP CONFIGURATIONS

The MG-MINA/LINA/750-LFC grid accommodates a variety of pickup configurations with its front and rear pickup points (two each) and 11 center pickup points. When possible, use the front and rear pickup points to change the tilt of the grid with the front and rear motors. You can also bridle between pickup points for greater stability, as compared to single front and rear pickup points.

⚠ **CAUTION:** Always use properly rated rigging hardware. 5/8-inch shackles are recommended for the MG-MINA/LINA/750-LFC's pickup points.

⚠ **CAUTION:** When using bridles between pickup points on the MG-MINA/LINA/750-LFC, the angle of the bridle at the apex should not be greater than 90 degrees to avoid increasing the load on the bridles and damaging the grid (Figure 23).

MG-MINA/LINA/750-LFC Pickup Configurations with Two Motors

The following examples show pickup configurations with two motors, and the maximum bridle apex angle.

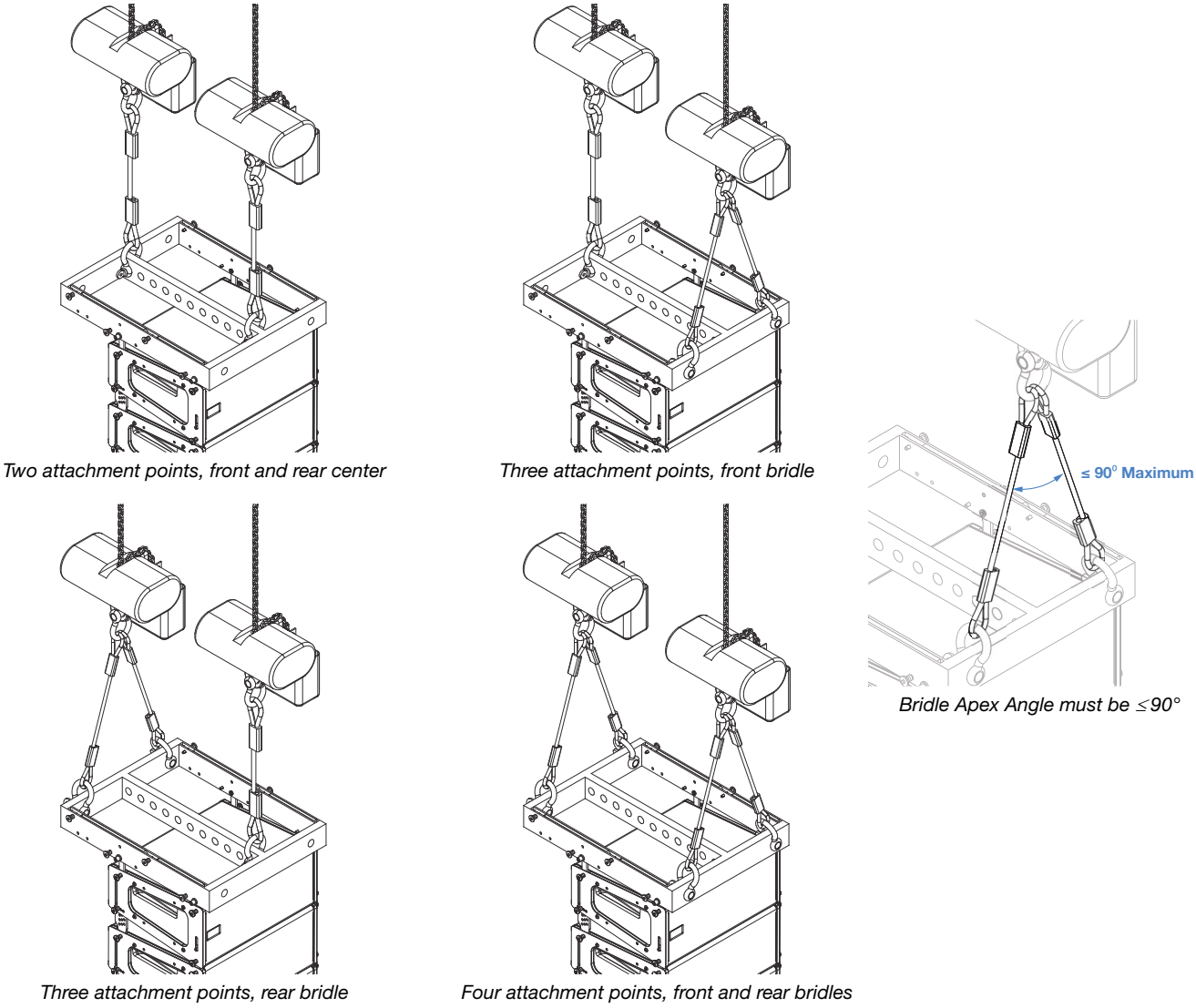

Two attachment points, front and rear center

Three attachment points, front bridle

Bridle Apex Angle must be ≤90°

Three attachment points, rear bridle

Four attachment points, front and rear bridles

Figure 22: Examples of Pickup Configurations with Two Motors (left, middle) and Maximum Bridle Apex Angle (right)

⚠ **CAUTION:** When suspending MG-MINA/LINA/750-LFC arrays from two motors, make sure each motor and the ceiling pickup point (above the hook) are rated to hold the total weight of the grid and array.

MG-MINA/LINA/750-LFC Pickup Configurations with One Motor

The following examples show pickup configurations with a single motor. While single motor configurations are supported, it is more difficult to change the tilt of the grid with these configuration when compared to configurations with two motors.

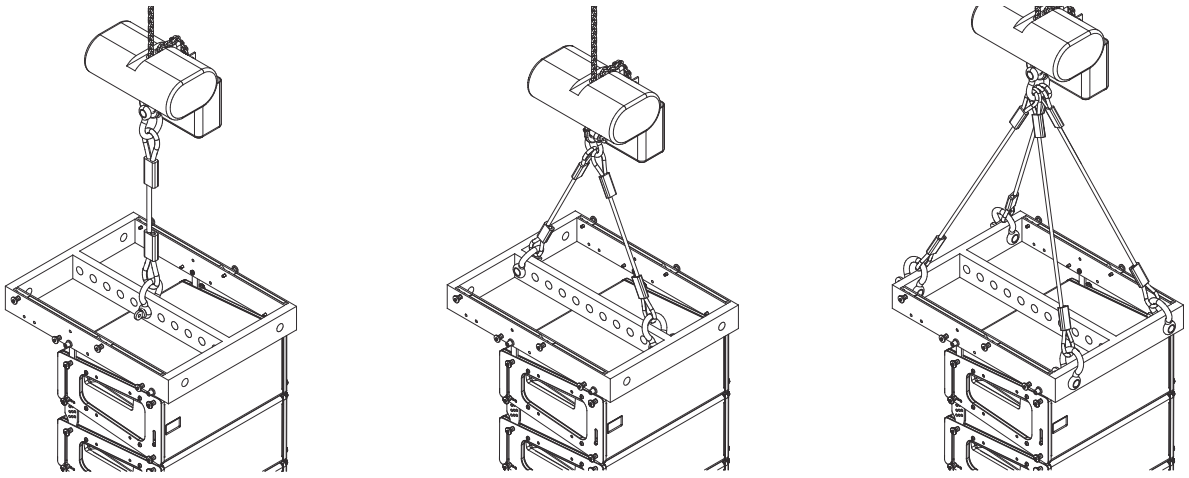

One attachment point, center

Two attachment points, front and rear center

Four attachment points, four corners

Figure 23: Examples of Pickup Configurations with One Motor

⚠ **CAUTION:** When suspending MG-MINA/LINA/750-LFC arrays from a single motor, make sure the motor and ceiling pickup point (above the hook) are rated to hold the total weight of the grid and array.

TIP: MAPP's Center of Gravity feature lets you easily determine the appropriate center pickup hole of the MG-MINA/LINA/750-LFC. For more information, see "Estimating the Center Pickup Point with MAPP" on page 31.

MAPP SYSTEM DESIGN TOOL AND RIGGING INFORMATION

MAPP is a powerful, cross-platform application for accurately predicting the coverage pattern, frequency response, impulse response, and maximum SPL output of single or arrayed Meyer Sound loudspeakers. Residing on your local computer, the MAPP client allows configuration of Meyer Sound loudspeaker systems and definition of the environment in which they will operate, including air temperature, pressure, and humidity.

MAPP System Design Tool provides a wealth of rigging information for loudspeaker arrays by automatically calculating the following values for specific array configurations:

- Total weight of array
- Height and depth of array
- Array's center of gravity (required for determining the center pickup point and maximum uptilt and downtilt)
- Load distribution for front and rear attachment points

Downloading and Installing MAPP

To use MAPP, register at the following link:

https://meyersound.com/product/mapp-xt/#register

After entering the necessary registration information, an email will be sent that includes the account user name, password, and the MAPP download link. On-screen instructions will provide guidance for the download and installation process.

The MAPP client software is regularly upgraded to add support for the latest Meyer Sound loudspeakers and to add feature enhancements. The MAPP database includes nearly all of the current Meyer Sound loudspeakers, subwoofers, and processors.

Estimating the Center Pickup Point with MAPP

To estimating the center pickup point with MAPP:

1. In MAPP, choose **Insert > Insert Flown Loudspeaker System**.
2. In the Flown Loudspeaker System dialog box, do the following:
   a. In the Reference Point Position section, set the **X** and **Y** coordinates for the MG-MINA/LINA/750-LFC grid.
   b. At the top of the Loudspeaker System Elements section, set the grid to either **MG-MINA forward** or **MG-MINA rearward**, depending on whether downtilt or uptilt is required.
   c. Click **Add Element** to add additional LINA loudspeakers to the array as necessary. Make sure the Total Weight shown in the lower right of the window does not exceed acceptable load ratings for the MG-MINA grid (see Table 4 on page 25).
   d. Adjust **Splay** angles for each loudspeaker.
   e. Click **Apply and Close** to close the Flown Loudspeaker System dialog box.

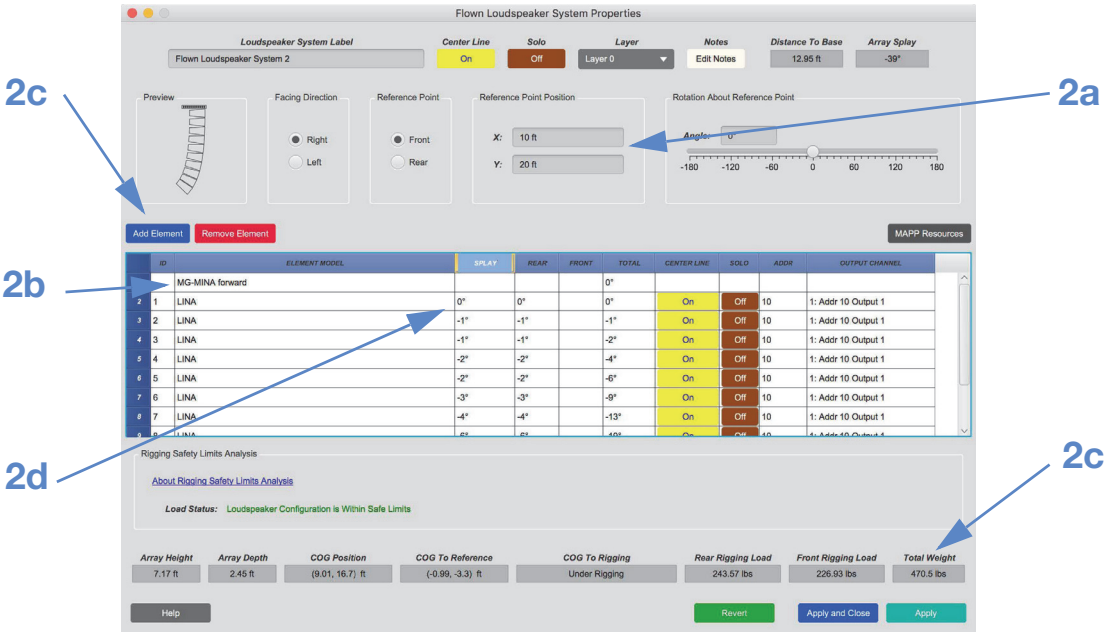

3. Select **View > Center Line**. Loudspeaker center lines are displayed in the Sound Field.

4. If necessary, adjust the MG-MINA/LINA/750-LFC grid height and grid angle to meet the system's acoustical requirements. These properties can be adjusted by entering values in the Edit Flown Loudspeaker Properties dialog box (select **Edit** and scroll down to Edit Flown Loudspeaker Properties to bring up dialog box), or by manually dragging the grid with the Select and Rotate tools in the Sound Field. For more information, visit the MAPP System Design Tool page at www.meyersound.com.
5. Select **View > Array CoG**. A magenta line representing the array's center of gravity is displayed in the Sound Field.
6. In the MAPP Window, in the upper right, click **Zoom** and then draw a rectangle around the grid in the Sound Field. The center of gravity is displayed near one of the grid pickup holes.
7. Adjust the grid angle until the center of gravity falls in the center of the nearest pickup hole. This is the angle at which the array will be flown when suspended from that pickup point.
8. Adjust further, if necessary, the grid height and grid angle until the system's acoustical requirements are met and the center of gravity falls in the center of one of the grid's pickup holes

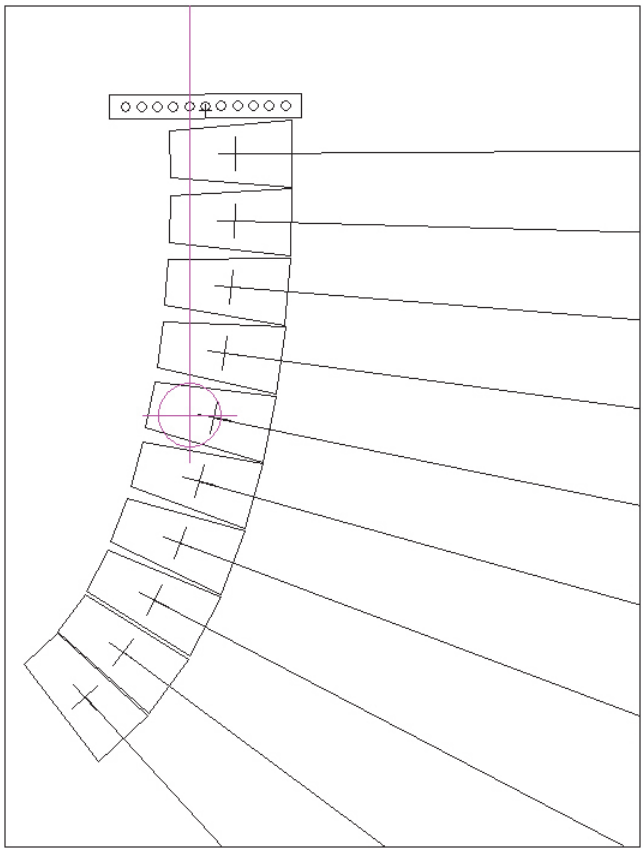

Figure 24: MAPP Showing LINA Array with Center of Gravity

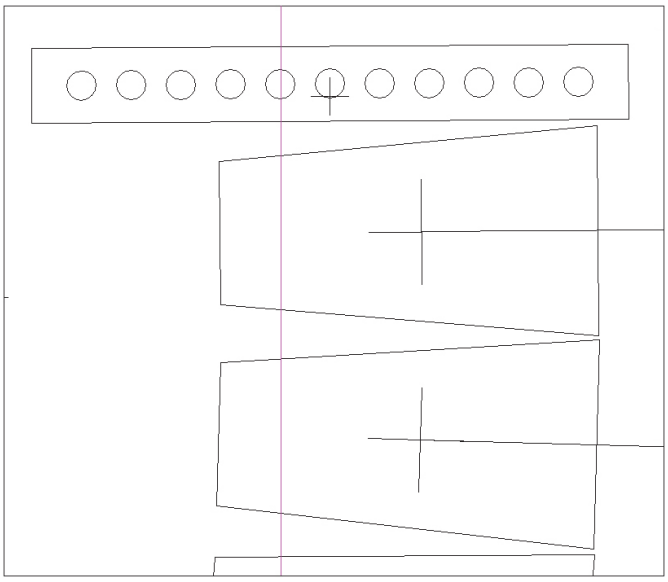

Figure 25: MAPP Showing Zoomed LINA Array with Center of Gravity

NOTE: See Appendix A, “Assembling Arrays with the Grid,” for array assembly instructions.

CHAPTER 7: MVP MOTOR VEE PLATE

The optional MVP motor Vee plate fine-tunes the horizontal aim of LINA and 750-LFC arrays ±16 degrees. The bottom of the Vee plate attaches to the MG-MINA/LINA/750-LFC grid's frontmost or rearmost point on the center pickup bar, while the top corners of the Vee plate attach to two motors, which, when adjusted, affect the horizontal rotation of the grid. The Vee plate's attachment points are 1.20-inch through and require 3/4-inch or 7/8-inch shackles. The Vee plate should always be placed on the grid side (front or rear) with the lower load value.

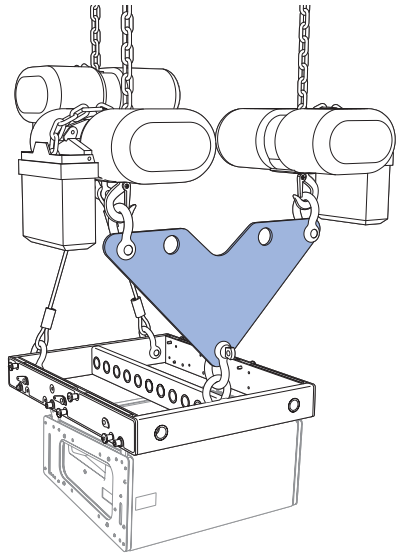

Figure 26: MVP Motor Vee Plate Attached to MG-MINA/LINA/750-LFC Grid

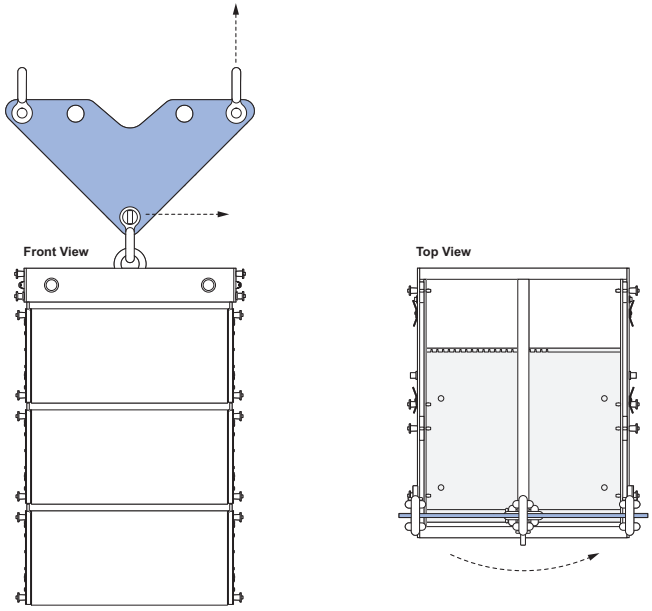

Figure 27: MVP Motor Vee Plate, Pulling Up on Either Motor Rotates the Grid

⚠ **CAUTION:** Always use properly rated rigging hardware. The MVP motor Vee plate attachment point holes are 1.20-inch through and require 3/4-inch or 7/8-inch shackles.

CAUTION: Use MAPP to determine the weight distribution between the front and rear of the grid. Use the point(s) carrying the lesser weight to attach the MVP motor Vee plate.

NOTE: The MVP motor Vee plate is compatible with any Meyer Sound grid with front and rear center pickup points.

MVP MOTOR VEE PLATE KIT CONTENTS

Table 5: MVP Motor Vee Plate Kit, PN 40.215.184.01

	Quantity	Part Number	Item
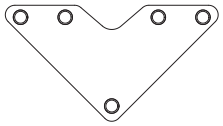	1	45.215.184.01	MVP motor Vee plate

MVP Motor Vee Plate Weight: 20 lbs (9.1 kg)

MVP MOTOR VEE PLATE LOAD RATINGS

The MVP motor Vee plate has the following maximum load rating:

- 7,129 lbs (3234 kg) at a 5:1 safety factor

CAUTION: **Potential risk of personal injury and damage to equipment.** Do not exceed load ratings.

CHAPTER 8: PBF-LINA PULL-BACK FRAME

For applications requiring extreme array downtilt that is not possible with adjustments to the motors attached to the grid, the optional PBF-LINA pull-back frame can be attached to the bottom cabinet in LINA and 750-LFC arrays and pulled by a separate motor. The pull-back frame is secured to the bottom cabinet with the loudspeaker quick-release pins (0.25 in x 0.53 in, black button, PN 134.039) included with the LINA and the 750-LFC. The PBF-LINA pull-back frame requires 1/2-inch shackles for its two pickup points.

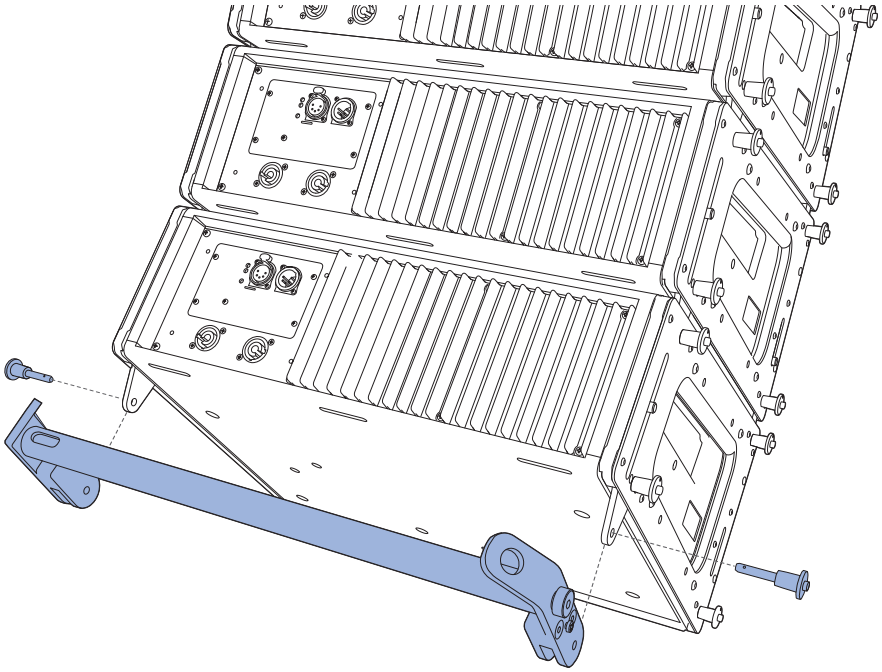

Figure 28: PBF-LINA Pull-Back Frame Attached to Bottom LINA, Exploded View

PBF-LINA KIT CONTENTS

Table 6: PBF-LINA Pull-Back Frame Kit, PN 40.271.080.01

	Quantity	Part Number	Item
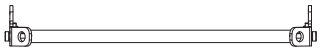	1	45.271.080.01	PBF-LINA pull-back frame

PBF-LINA PULLBACK FRAME DIMENSIONS

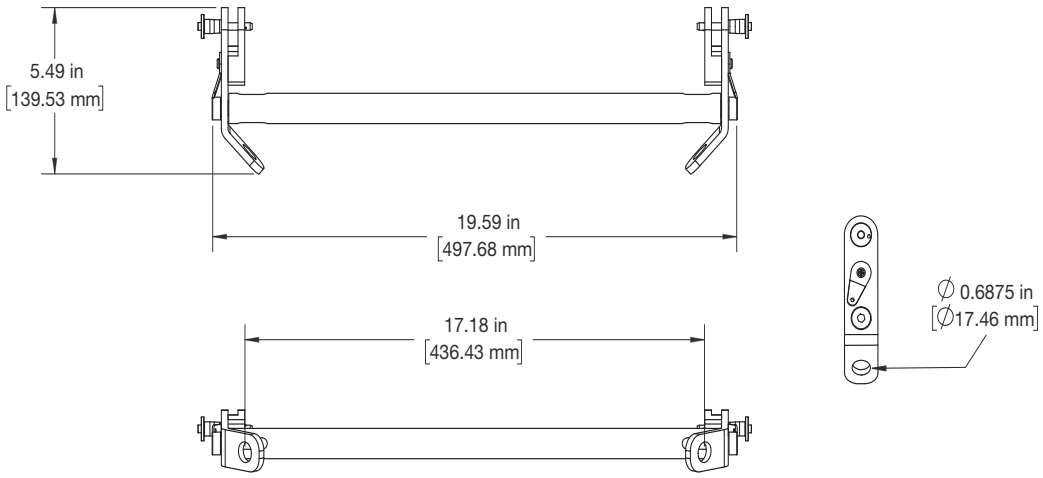

Figure 29: PBF-LINA Pull-Back Frame Dimensions

PBF-LINA Pullback Frame Weight: 3.8 lbs (1.7 kg)

PBF-LINA PULLBACK FRAME LOAD RATINGS

The PBF-LINA pull-back frame has the following maximum load ratings:

- MINA/LINA: 1,154 lb (524 kg) at a 5:1 safety factor; 899 lb (408 kg) for BGV-C1
- 750-LFC: 554 lb (251 kg) at 5:1 safety factor; 458 lb (208 kg) for BGV-C1

CAUTION: Potential risk of personal injury and damage to equipment. Do not exceed load ratings. To verify pull-back load ratings, see “Verifying PullBack Requirements in MAPP” on page 40.

CAUTION: The apex angle for the bridle attachment to the PBF-LINA pull-back frame must not be greater than 90 degrees (Figure 30). Using a bridle leg length that results in an apex angle wider than recommended reduces the load rating and may damage the PBF-LINA pull-back frame.

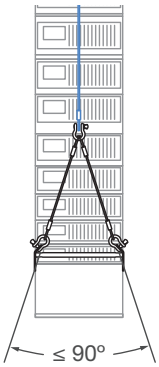

Figure 30: Bridle Apex Angle Limitation for PBF-LINA Pull-back Frame

CAUTION: When configuring arrays with pull-back, when in final position, the pull-back chain should not be more than ±10 degrees from vertical.

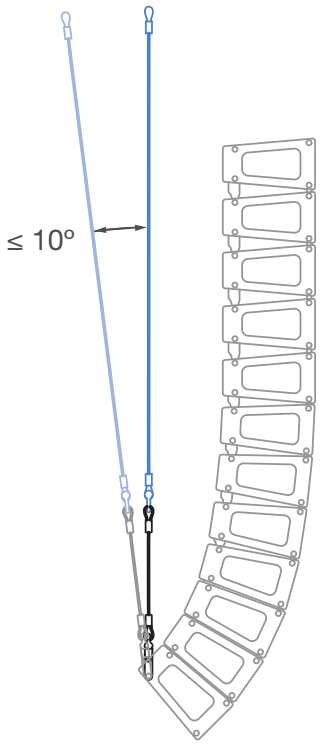

Figure 31: Limit on Pull-back Chain Deviation from 0 degrees vertical

CAUTION: When flying arrays, the total weight of the array, including any pull-back and pull-up hardware, should be calculated before the array is flown to verify its weight does not exceed the load ratings for the MG-MINA/LINA/750-LFC grid. For more information, see “MG-MINA/LINA/750-LFC Grid Load Ratings” on page 25.

CAUTION: Always use properly rated rigging hardware. The PBF-LINA pull-back frame requires 1/2-inch shackles for its pickup points.

VERIFYING PULLBACK REQUIREMENTS IN MAPP

To verify array pull-back requirements in MAPP:

1. Insert the loudspeaker array and configure loudspeaker splay angles:
   a. Choose Insert > Insert Flown Loudspeaker System.
   b. In the Flown Loudspeaker System dialog box, at the top of the elements list, set the grid to one of the following options, depending on whether a LINA or 750-LFC is attached to the grid, and whether downtilt or uptilt is required. The elements list is populated with loudspeakers set to default splay angles.
      – MG-MINA rearward
      – MG-MINA (MLK-750/750 forward)
      – MG-MINA (MLK-750/750 rearward)
      – MG-MINA (750 forward)
      – MG-MINA (750 rearward)
   c. To insert a transition frame or additional loudspeakers, click **Add Element**.
   d. To remove a loudspeaker, select the loudspeaker and click **Remove Element**.
   e. To change loudspeaker splay angles, click the angle in the Splay column and select the angle from the drop-down.

2. Evaluate need for Pull-Back Frame:
   a. In the **Rotation About Reference Point** section (Figure 32), enter the desired downtilt of the array (negative value is downtilt).
   b. If the Front Rigging Load amount (at the bottom of the dialog box) is a positive value, no pull-back hardware is required.
   c. If the Front Rigging Load weight is a negative value (Figure 32), pull-back hardware (PBF-LINA) is required to achieve the desired amount of downtilt (Figure 33). Make sure that the Front Rigging Load weight (the negative value) does not exceed the maximum load ratings for the pull-back hardware (see “PBF-LINA Pullback Frame Load Ratings” on page 38).

3. Verify whether the array complies with the required safety rating:
   a. Use the **Rotation About Reference Point** (Figure 33) to rotate the array to the desired amount of downtilt (negative angle value).
   b. If the Load Status is green (“Loudspeaker Configuration is Within the Safe Limits”), the array is within the safe loading limits. Proceed to the next step.
   c. If the Load Status turns red (“Loudspeaker Configuration is Not Within Safe Limits”), the array is not within safe limits. Return to the previous step and reduce the grid angle, reduce the number of loudspeakers in the array, or adjust the loudspeaker splay angles.

⚠ **CAUTION:** For the best stability when flying arrays from multiple motors (for example, two motors attached to the grid and one motor attached to the pull-back frame), make sure to distribute the load to all motors.

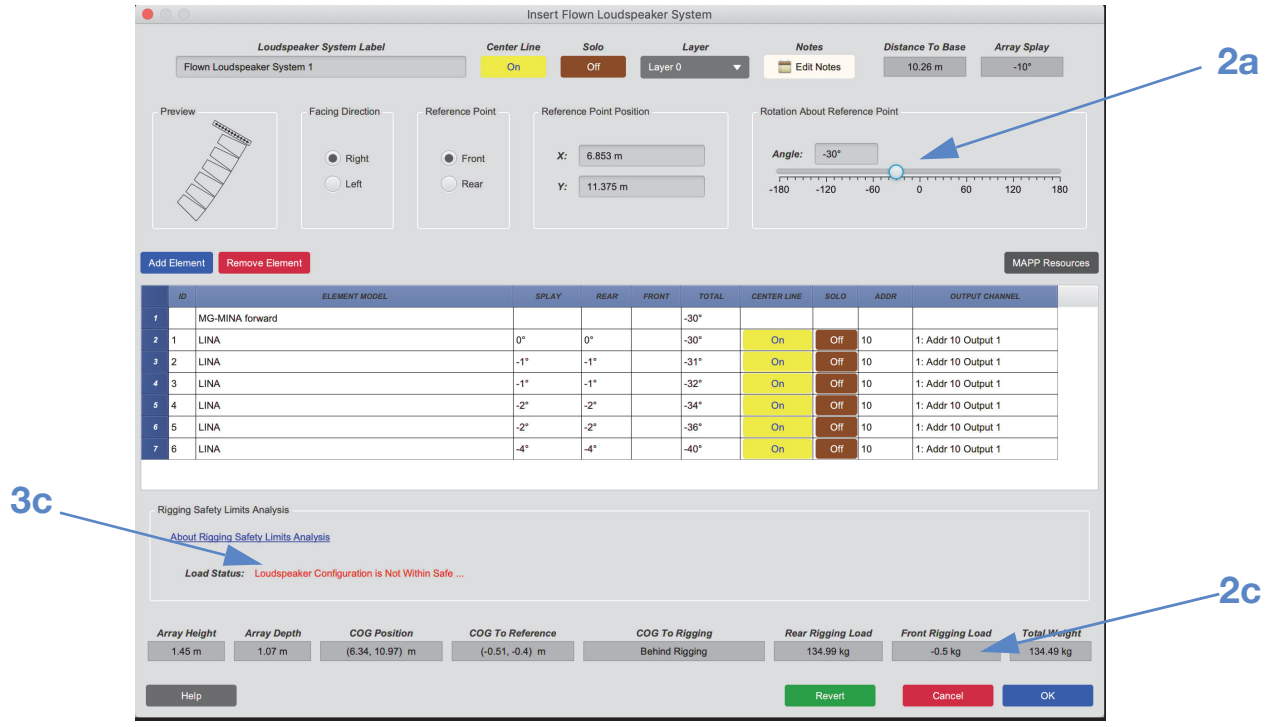

Figure 32: MAPP Display Window Shows Front Rigging Load Weight as a Negative Value—Pull-Back Frame Required

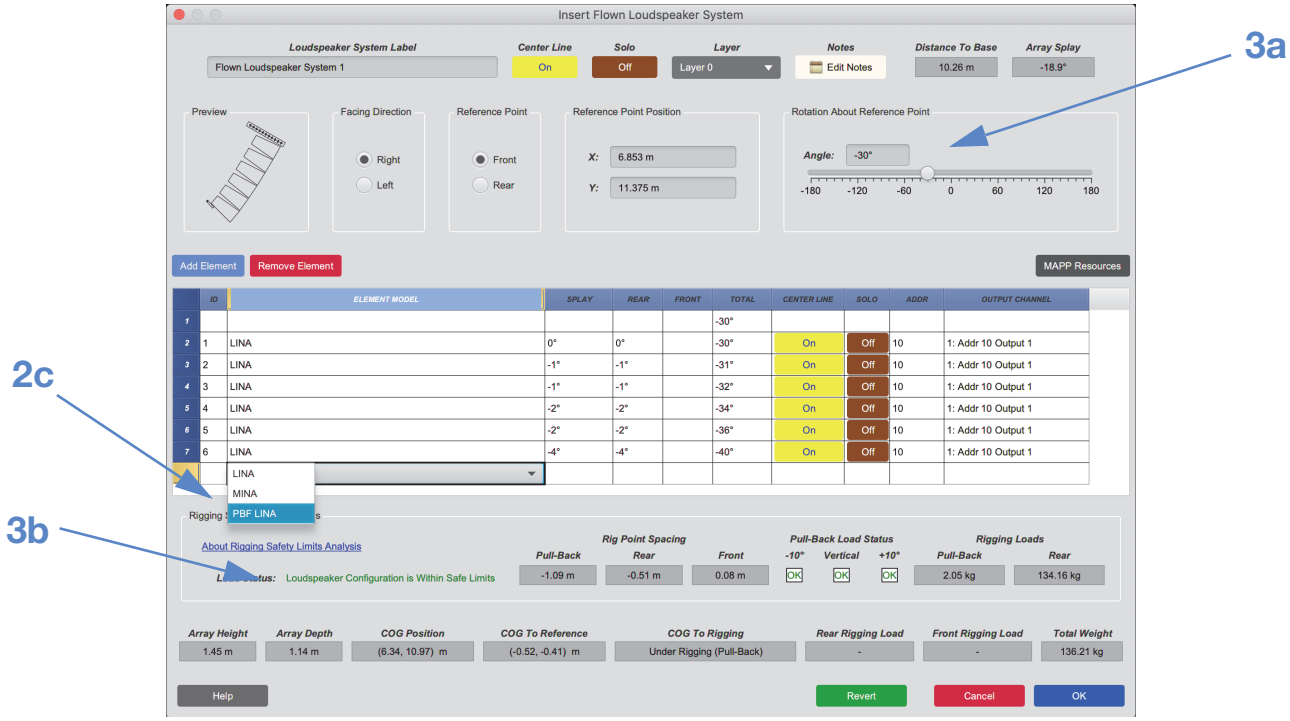

Figure 33: MAPP Display Window Shows Addition of Pull-Back Frame Brings Loudspeaker Configuration to Within Safe Limits

CHAPTER 9: GROUNDSTACKING WITH THE MG-MINA/LINA/750-LFC GRID

The MG-MINA/LINA/750-LFC grid can safely groundstack up to six LINA loudspeakers. The LINA at the bottom of the stack attaches directly to the grid with its GuideALinks and is secured with the quick-release pins (0.25 in x 0.90 in, black button with 6 in lanyard, PN 134.036) included with the grid. The configuration of the rear GuideALinks for the attached LINA determines its tilt. The groundstacked array can be curved by adjusting the rear GuideALink positions of the units stacked above the bottom LINA.

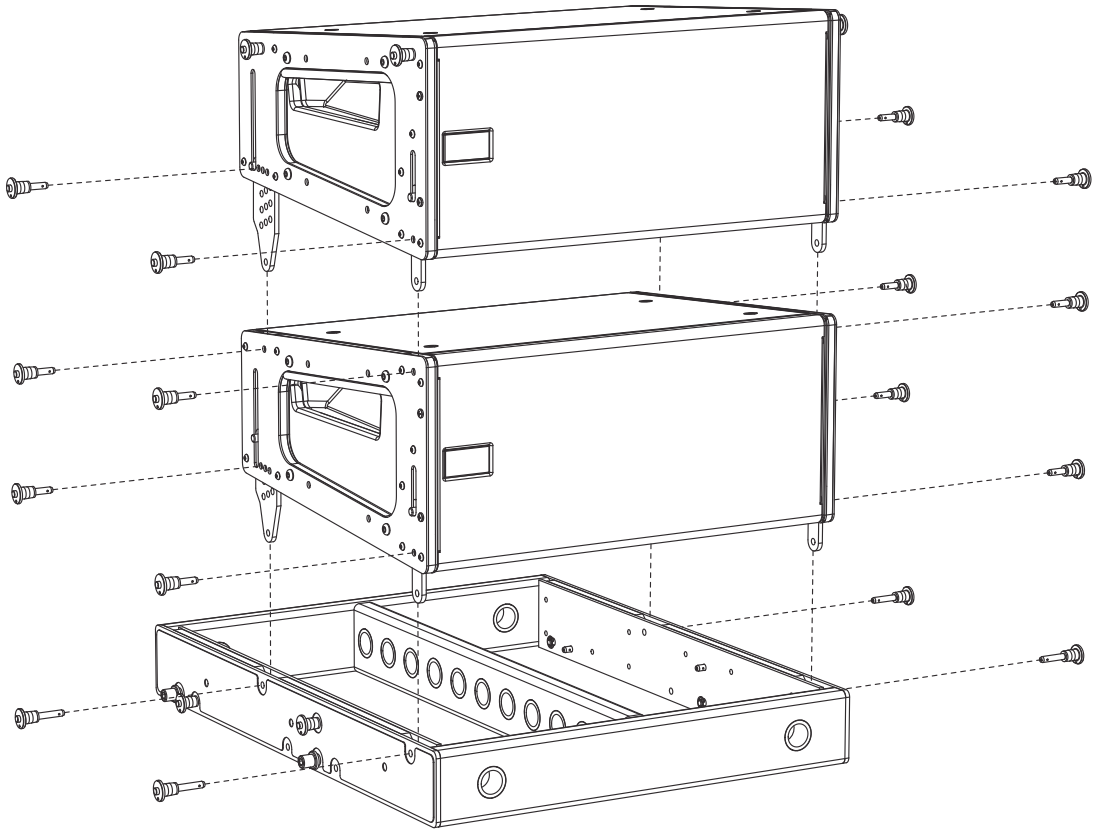

Figure 34: MG-MIN/LINA/750-LFC Grid with Groundstacked LINA

CAUTION: Always use the quick-release pins included with the MG-MINA/LINA/750-LFC grid to secure its links, as well as to secure groundstacked LINAs to the grid. Do not use the quick-release pins included with LINA in the grid as they are shorter and will not lock in place.

NOTE: While it may be possible to safely groundstack up to seven or eight units with MG-MINA/LINA/750-LFC grid, you should only do so if the stack's center of gravity is near the center of the grid. Groundstacks with extreme tilts place the center of gravity further from the grid's center and may be at risk of tipping.

CAUTION: To secure groundstacked arrays, particularly in outdoor situations, use tie downs or weights with the grid, as well as a safety system on the array.

ANGLES FOR GROUNDSTACKED LINAS WITH THE MG-MINA/LINA/750-LFC

For groundstacked configurations with the MG-MINA/LINA/750-LFC, the angle for the bottom LINA attached to the grid can be from +6 degrees (uptilt) to –5 degrees (downtilt). Table 7 on page 45 lists the available angles and the corresponding label positions for the rear GuideALinks.

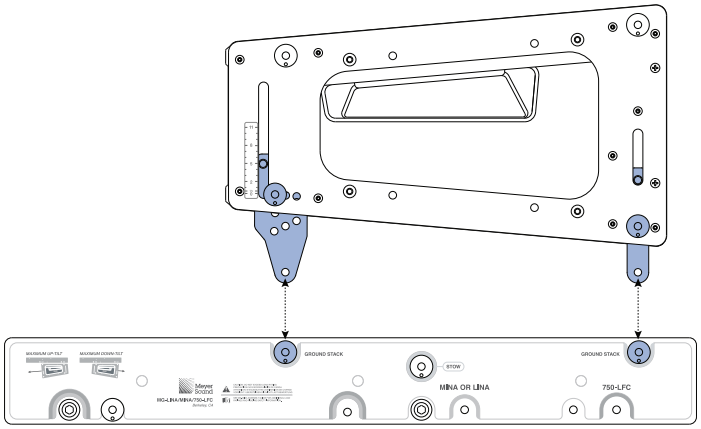

Figure 35: MG-MINA Grid with Groundstacked LINA, 0 Degrees

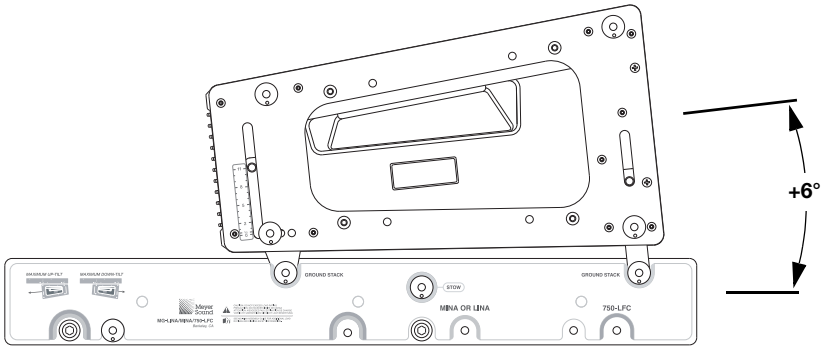

Figure 36: MG-MINA Grid with Groundstacked LINA, +6 Degrees Uptilt

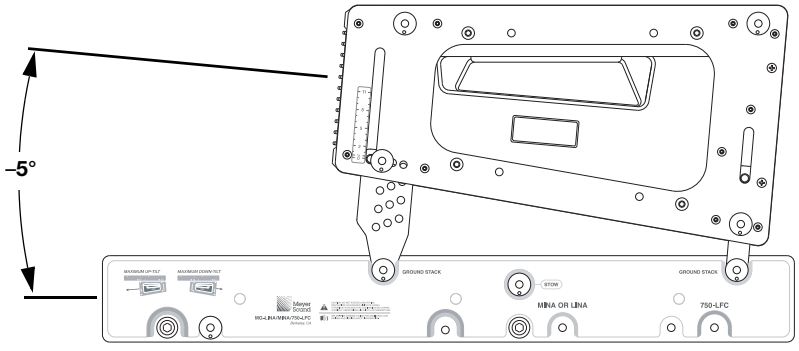

Figure 37: MG-MINA Grid with Groundstacked LINA, –5 Degrees Downtilt

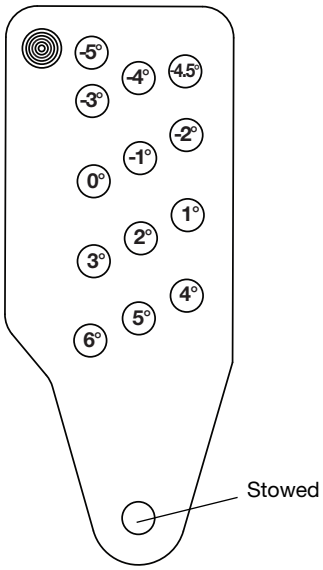

Figure 38: LINA Rear GuideALink Angles for Groundstacked Units

Table 7: MG-MINA Groundstack Angles

Rear GuideALink Label Position	Actual Groundstack Angle
0	–5°
0.5	–4.5°
1	–4°
2	–3°
3	–2°
4	–1°
5	0°
6	+1°
7	+2°
8	+3°
9	+4°
10	+5°
11	+6°

With some restrictions, the MG-MINA/LINA/750-LFC grid safely groundstacks up to:

- 6 LINAs
- 5 LINAs on top of 1 750-LFC (mixed groundstack)
- 4 LINAs on top of 2 750-LFCs (mixed groundstack)
- 3 750-LFCs

NOTE: Use MAPP to verify designs and rigging configurations.

To groundstack 750-LFCs with the MG-MINA/LINA/750-LFC grid, the 750-LFCs must be equipped with the MRK-750 rigging kit.

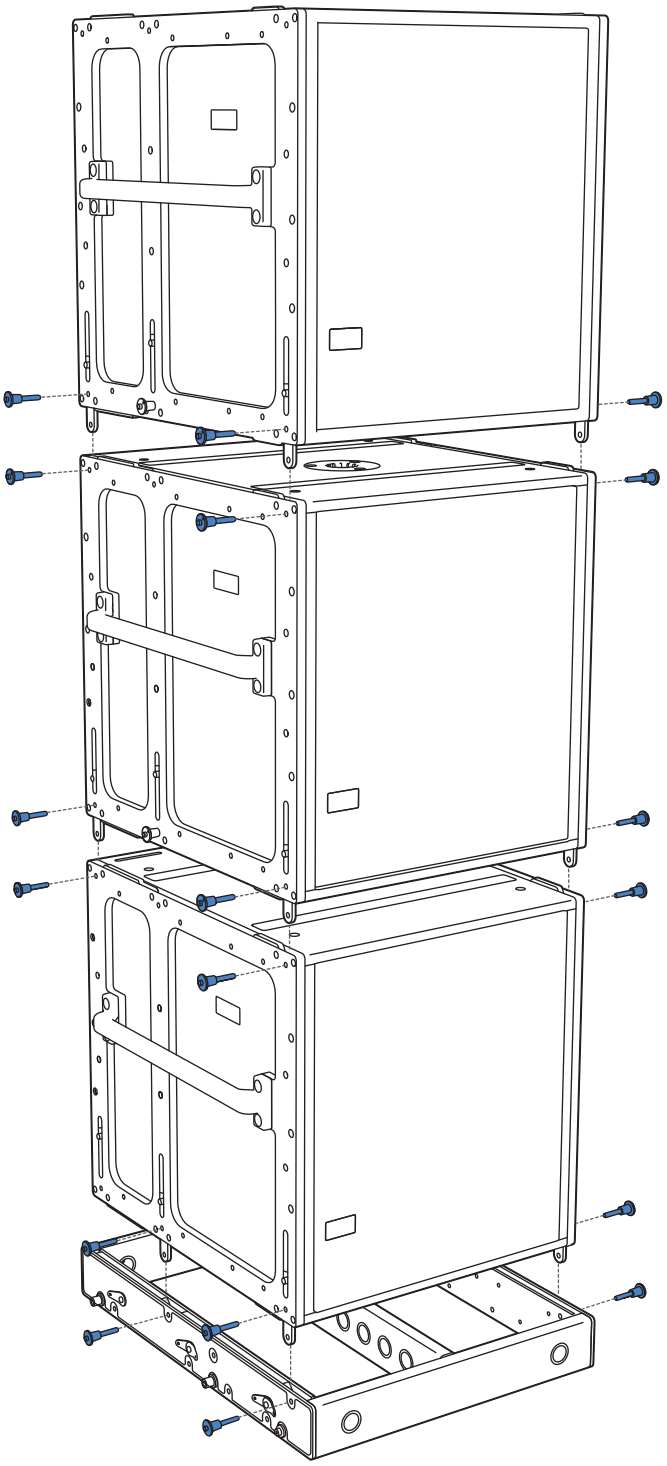

Figure 39: MG-MINA/LINA/750-LFC Grid with Groundstacked 750-LFCs, Exploded View

GROUNDSTACKING LINAS ON THE 750-LFC

Up to five LINAs can be groundstacked on top of a single 750-LFC (when equipped with the MRK-750 rigging kit).

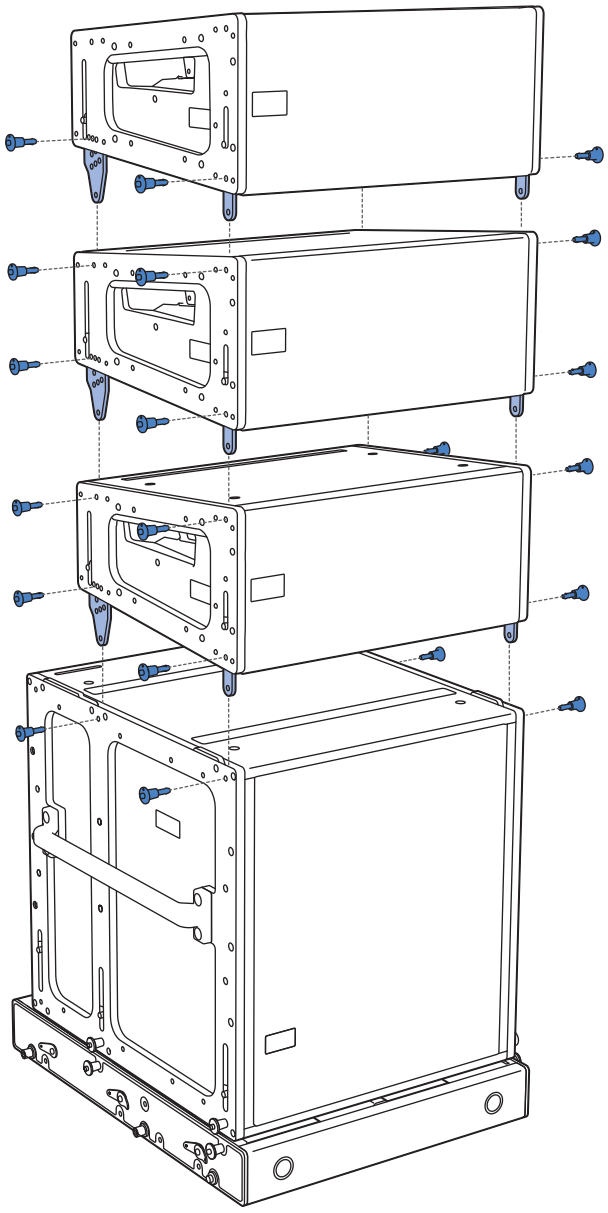

Figure 40: LINAs Groundstacked on 750-LFC, Exploded View

⚠ **CAUTION:** To further secure large groundstacks, particularly in outdoor installations with severe wind conditions, attach tie-downs or weights to the grid along with a safety system directly to the groundstack.

CHAPTER 10: MYA-MINA/LINA MOUNTING YOKE

The MYA-MINA/LINA mounting yoke flies up to three LINA loudspeakers from a single hanging point, or pole-mounts up to two LINA loudspeakers with a third-party pole-mount adapter. The yoke includes two bracketing options: the MPA-2 bracket for attaching to two cabinets, and the MPA-3 bracket for attaching to one or three cabinets. For larger arrays, the MG-MINA/LINA/750 grid is recommended (see Chapter 5, “MG-MINA/LINA/750-LFC Grid”); for smaller profile applications, the MUB-MINA/LINA U-bracket is recommended (see Chapter 11, “MUB-MINA/LINA U-Bracket”).

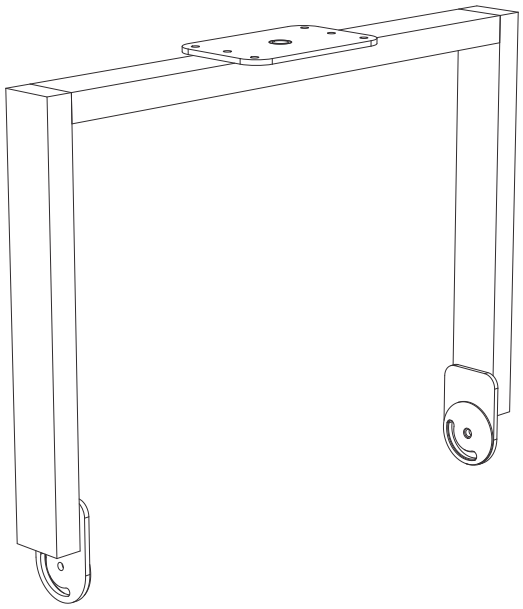

Figure 41: MYA-MINA/LINA Mounting Yoke

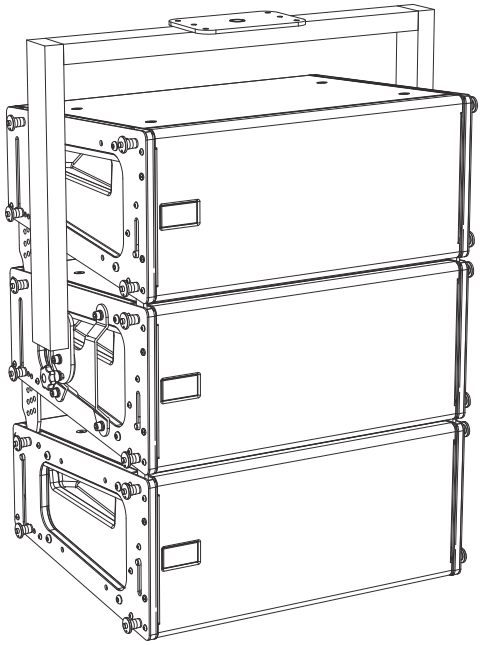

Figure 42: MYA-MINA/LINA Mounting Yoke with MPA-3 bracket and Three LINA Loudspeakers

MYA-MINA/LINA Kit Contents

Table 8: MYA-MINA/LINA (PN 40.207.104.01)

	Part Number	Quantity	Description
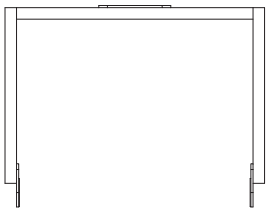	45.207.135.01	1	MYA-MINA/LINA yoke assembly
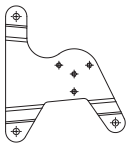	64.207.155.01	1	MPA-3 Bracket (right) for one or three cabinets
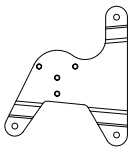	64.207.156.01	1	MPA-3 Bracket (left) for one or three cabinets
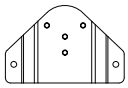	64.207.157.01	2	MPA-2 Bracket for two cabinets
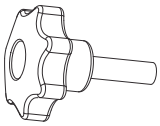	124.115	2	Knobs, M6 x 1 x 20 mm
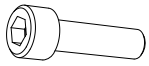	101.840	14	Screws, M6 x 1 x 22 mm
	113.521	14	Flat washers, M6
	115.531	14	Lock washers, M6

MYA-MINA/LINA Dimensions

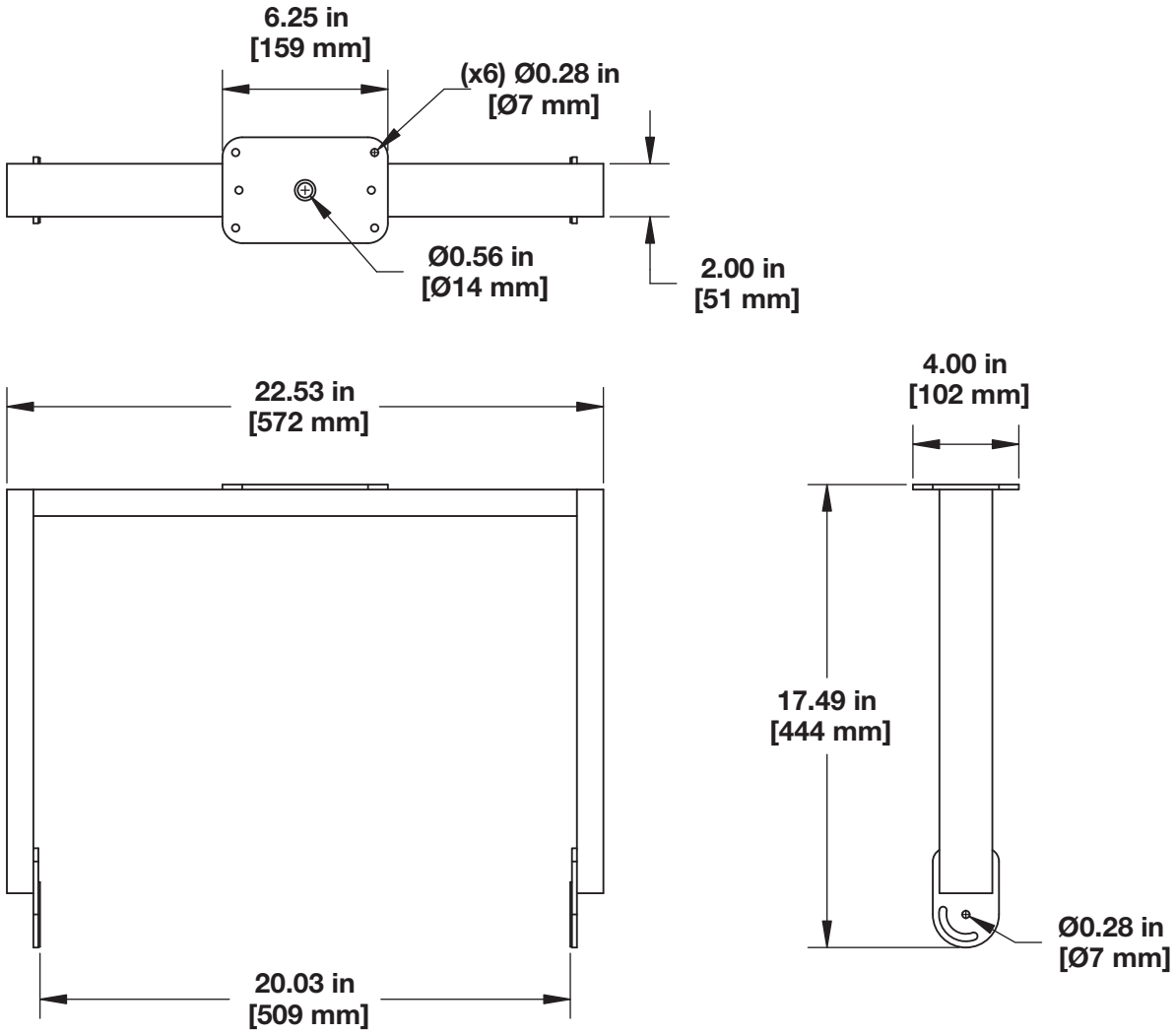

Figure 43: MYA-MINA/LINA Dimensions

MYA-MINA/LINA Weight: 12.9 lbs (5.85 kg)

MYA-MINA/LINA LOAD RATINGS

An array of up to three LINA loudspeakers can be flown with the MYA-MINA mounting yoke at a 5:1 safety factor. When flying any number of LINAs with the yoke, the yoke must be secured to the mounting surface with the 1/2-inch center hole.

Table 9: MYA-MINA/LINA Load Ratings

Mounting Point	Safety Factor	Number of Flown LINAs	MYA-MINA Yoke Mounting Plate
0.5 in center hole	5:1	Three LINAs (129 lb, 58.51 kg)	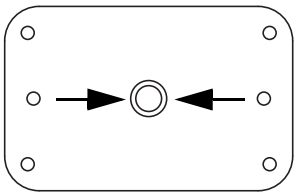
Four 0.25 in corner holes	NA	**Not rated for flown applications**; these holes should only be used to attach the yoke to a pole-mount adapter; a maximum of two LINAs can be pole-mounted.	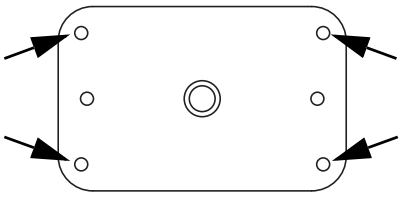 Not rated for flown applications

CAUTION: When mounting the MYA-MINA/LINA on a pole, make sure the pole and pole-mount adapter have been rated to support the full weight of the yoke and two loudspeakers. Observe all safety precautions specified by the pole and pole-mount adapter manufacturer.

MYA-MINA/LINA BRACKET OPTIONS

The MYA-MINA mounting yoke includes two side bracketing options: the MPA-2 for attaching to two cabinets, and the MPA-3 for attaching to one or three cabinets. The bracket options allow the yoke to attach near the center of gravity for the loudspeakers. The brackets bolt directly to the LINA end frames with the M6 bolts and washers included with the yoke kit; for attaching to the yoke, the brackets include a center/pivot hole and three pinning holes to yield a wide range of uptilt and downtilt angles for the loudspeakers.

MPA-2 Bracket

When suspending two LINA cabinets with the MYA-MINA/LINA mounting yoke, use the MPA-2 bracket (Figure 44) and attach it to the bottom cabinet.

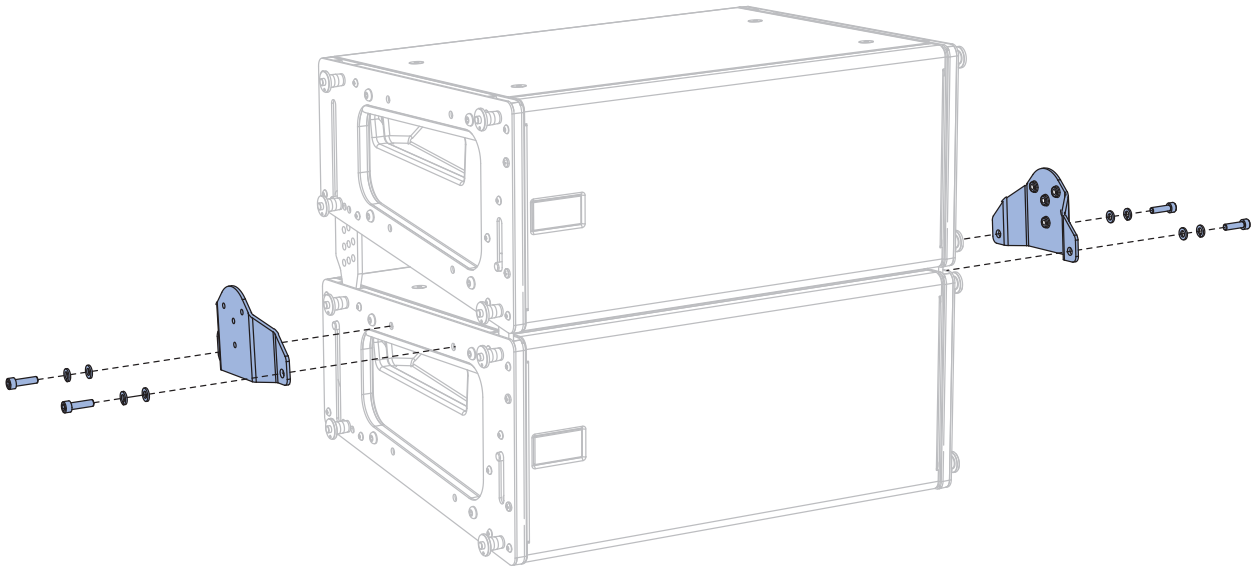

Figure 44: MPA-2 Bracket

MPA-3 Bracket

When suspending one or three LINA cabinets with the MYA-MINA/LINA mounting yoke, use the MPA-3 bracket (Figure 45). When suspending three cabinets, attach the bracket to the center cabinet (see Figure 47 on page 54).

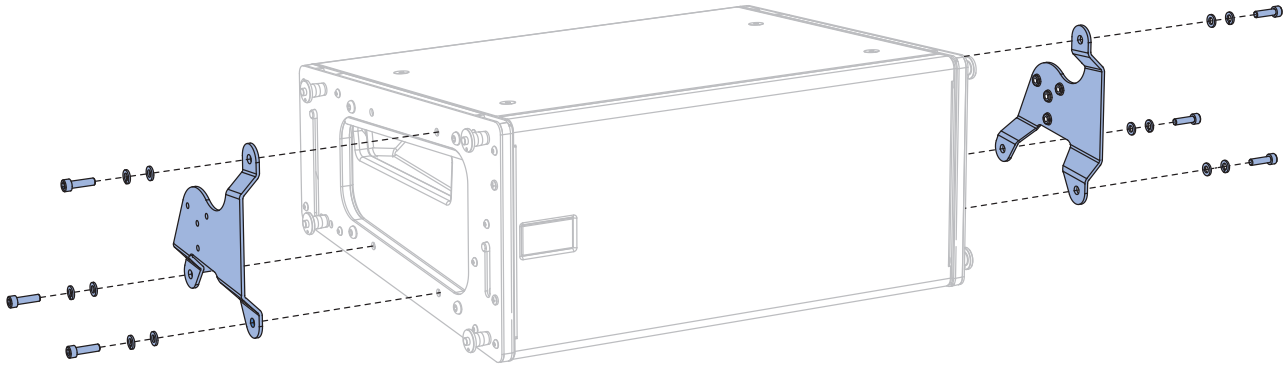

Figure 45: MPA-3 Bracket

MYA-MINA/LINA FLOWN CONFIGURATIONS

The MYA-MINA mounting yoke flies up to three LINA loudspeakers from a single hanging point. The yoke attaches to the side brackets (which attach directly to the LINA end frames) and is secured with the included M6 screws in the center pivot holes, and the M6 knobs in one of three pinning holes. For flown applications, the yoke supports up to 20 degrees of uptilt and severe downtilts of 90 degrees or more (Figure 46).

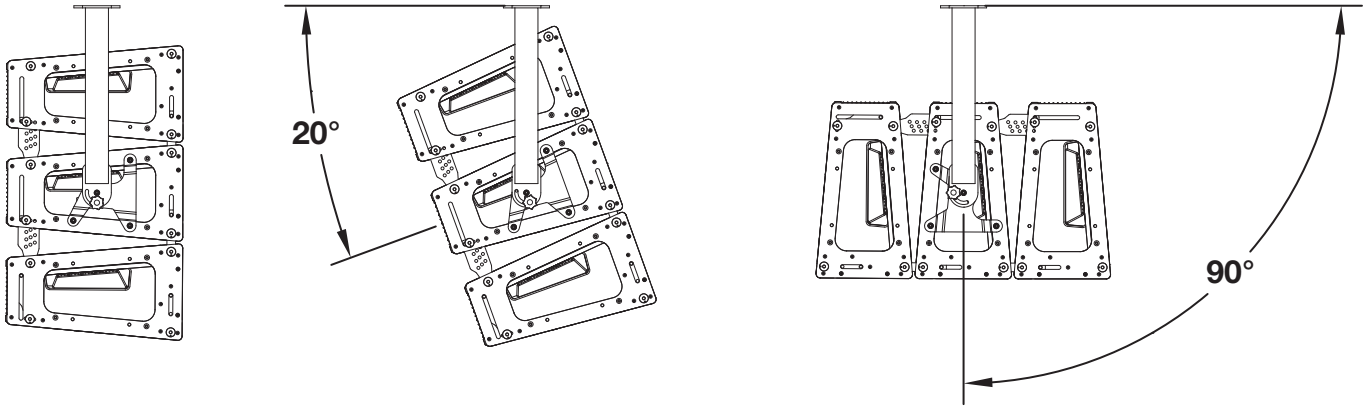

Figure 46: Flown Configurations for MYA-MINA/LINA with Three LINAs

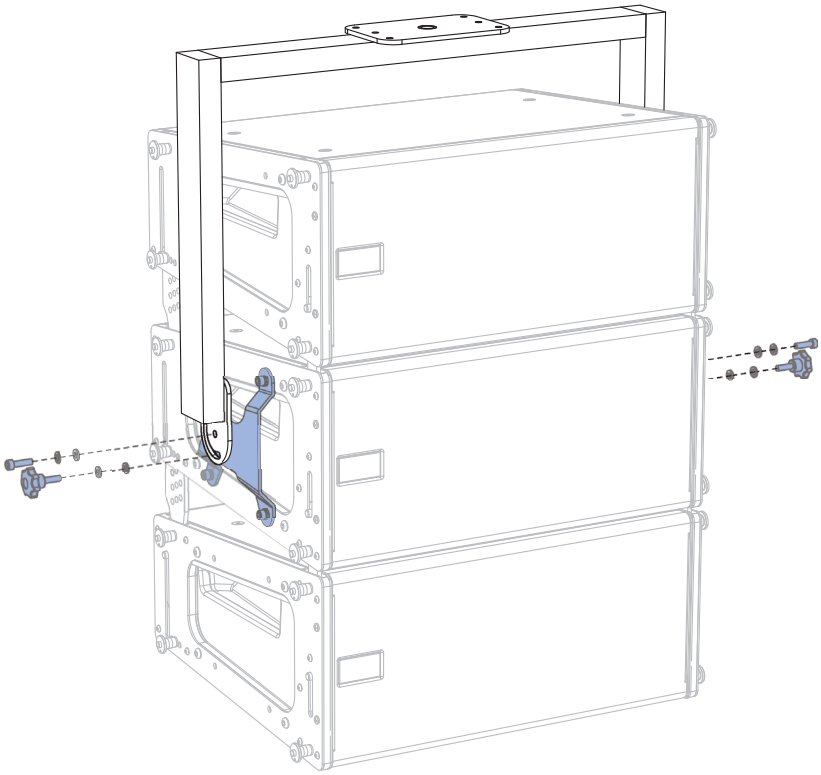

Figure 47: Flown MYA-MINA/LINA with MPA-3 Adapter and Three LINAs

⚠ **CAUTION:** The MYA-MINA/LINA mounting bracket at the top of yoke has one 1/2-inch center hole and four smaller corner holes. Only the center hole is rated for flown applications. The four corner holes are used for attaching to pole-mount adapters. For information load ratings, see Table 9 on page 52.

TIP: The M6 screws can be used in the pinning holes for fixed installations that will not require tilt adjustments for the loudspeakers. For installations that *will* require tilt adjustments, use the M6 knobs in the pinning holes, as they are more easily loosened and tightened.

The MYA-MINA/LINA mounting yoke can be suspended with a standard 1/2-inch C-clamp or half Cheesborough clamp (Figure 48) (not included). Make sure the clamp is rated to support the full weight of the yoke and flown loudspeakers.

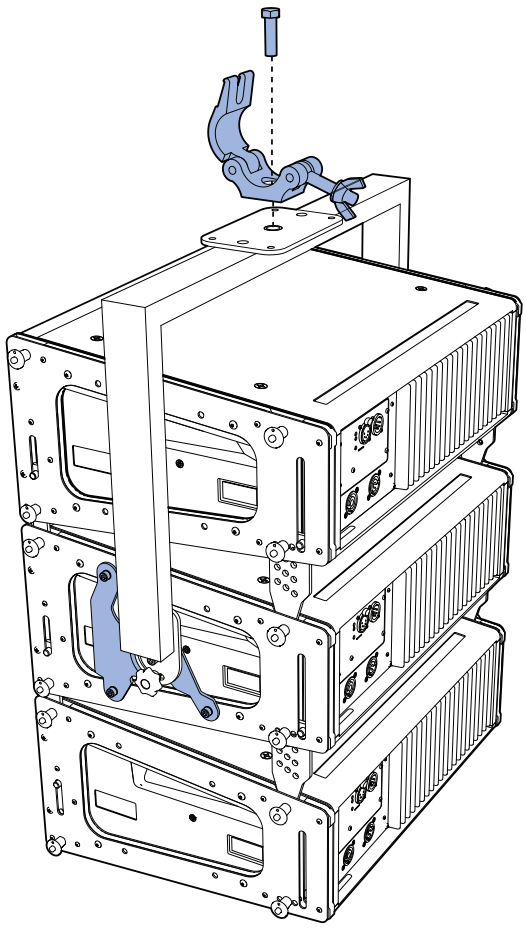

Figure 48: Flown MYA-MINA/LINA using MPA-3 bracket with Half Cheeseborough Clamp

MYA-MINA/LINA POLE-MOUNT CONFIGURATIONS

Up to two LINA loudspeakers can be pole-mounted with the MYA-MINA/LINA mounting yoke. The yoke attaches to the side brackets (which attach directly to the LINA end frames) and is secured with the included M6 screws in the center, pivot holes, and the M6 knobs in one of three pinning holes. For pole-mount applications, the yoke supports up to 35 degrees of downtilt and severe uptilts of 90 degrees or more (Figure 49). When pole-mounting LINAs with the yoke, a pole-mount adapter is required (Figure 50). (See Chapter 12, “MPK Pole and pole-mount receptacle”)

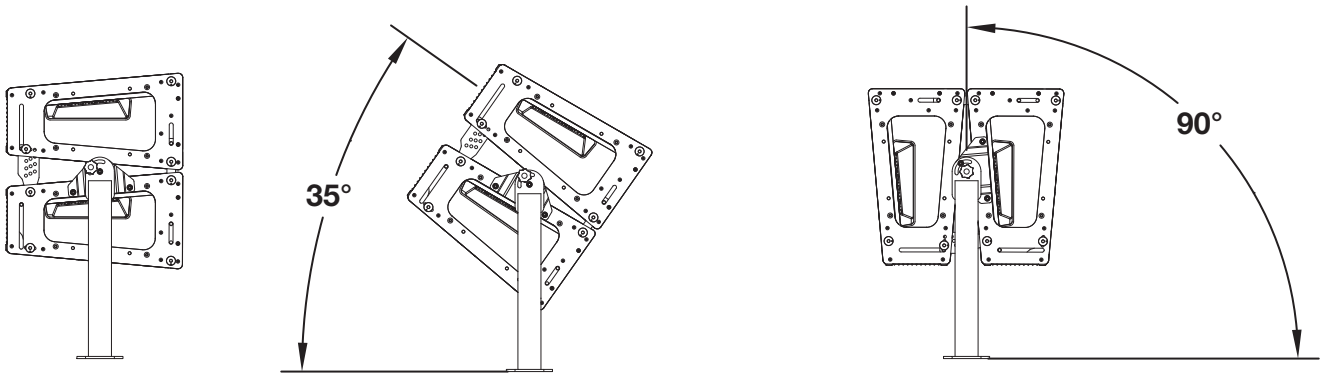

Figure 49: Pole-Mount Configurations for MYA-MINA/LINA with Two LINAs

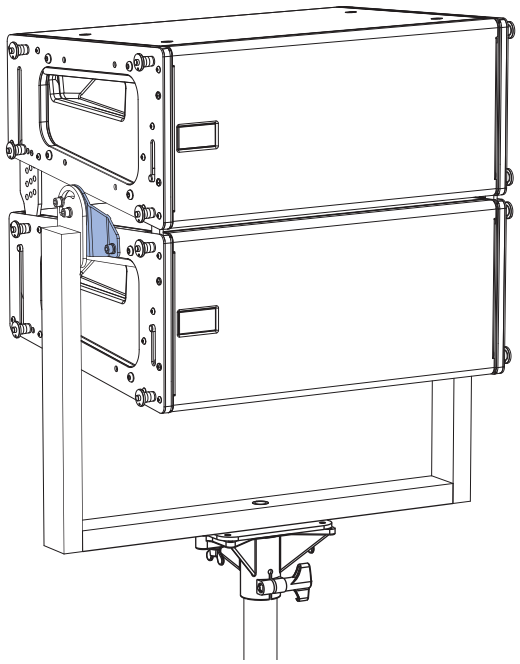

Figure 50: MYA-MINA/LINA using MPA-2 bracket on a 35MM Pole Stand Adapter (PN 40.010.970.01)

CAUTION: When mounting the MYA-MINA/LINA on a pole, make sure the pole and pole-mount adapter have been rated to support the full weight of the yoke and two loudspeakers. Observe all safety precautions specified by the pole and pole-mount adapter manufacturer.

TIP: The M6 screws can be used in the pinning holes for fixed installations that will not require tilt adjustments for the loudspeakers. For installations that *will* require tilt adjustments, use the M6 knobs in the pinning holes, as they are more easily loosened and tightened.

CHAPTER 11: MUB-MINA/LINA U-BRACKET

The MUB-MINA/LINA U-bracket (Figure 51) was primarily designed for aiming a single LINA loudspeaker in floor- and ceiling-mount configurations (Figure 52). However, the U-bracket is strong enough to support arrays of up to five cabinets, or to stack up to two cabinets in floor- and pole-mount configurations. With the U-bracket, up to two LINA loudspeakers can also be flown from trusses using C-clamps or the equivalent.

For flying and groundstacking larger arrays, the MG-MINA/LINA/750-LFC grid is recommended (see Chapter 5, “MG-MINA/LINA/750-LFC Grid”); for applications requiring continuous adjustability or greater downtilt and uptilt angles, the MYA-MINA/LINA mounting yoke is recommended (see Chapter 10, “MYA-MINA/LINA Mounting Yoke”).

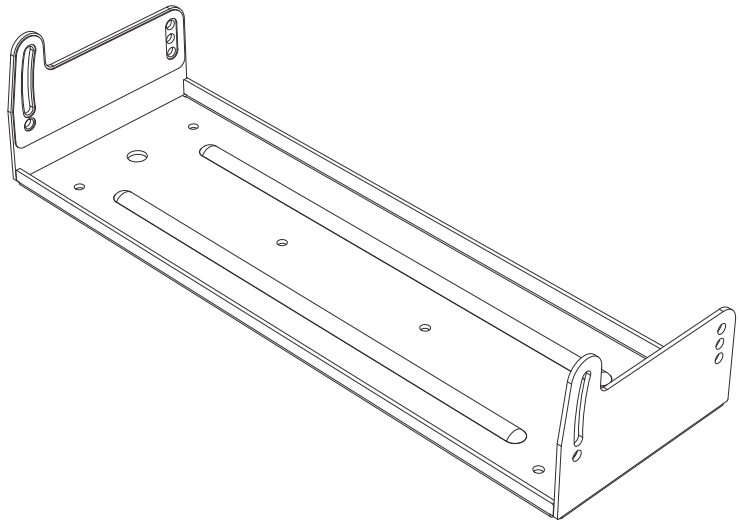

Figure 51: MUB-MINA/LINA U-Bracket

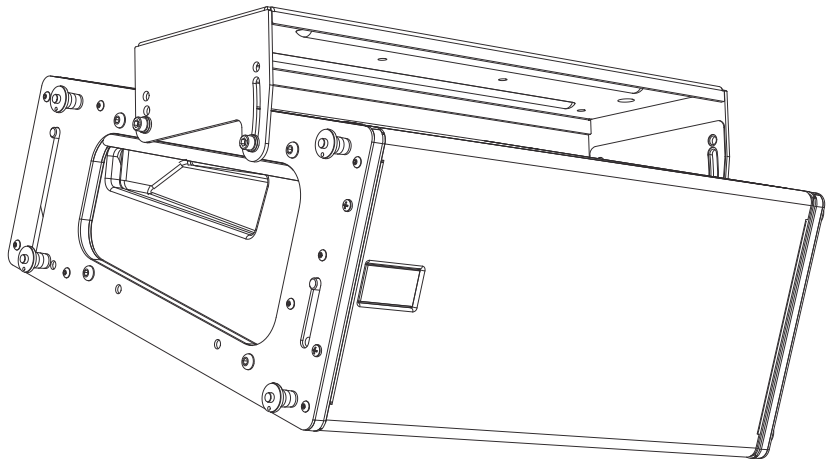

Figure 52: MUB-MINA/LINA U-Bracket with One LINA Loudspeaker

MUB-MINA/LINA Kit Contents

Table 10: MUB-MINA/LINA Kit Contents (PN 40.207.030.01)

	Part Number	Quantity	Description
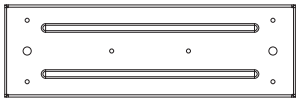	45.207.030.01	1	MUB-MINA/LINA U-bracket
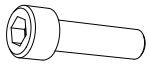	101.840	4	Screws, M6 x 1 x 22 mm
	113.521	4	Flat washers, M6
	115.531	4	Lock washers, M6

MUB-MINA/LINA Dimensions

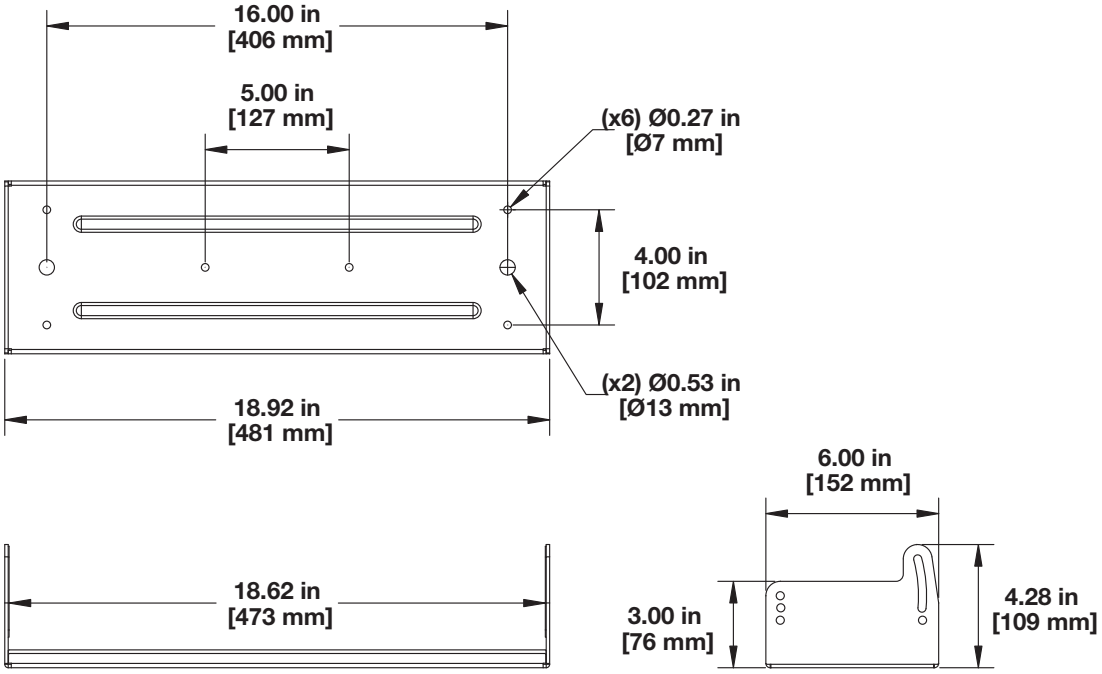

Figure 53: MUB-MINA/LINA Dimensions

MUB-MINA/LINA Weight: 5.8 lbs (2.63 kg)

MUB-MINA/LINA LOAD RATINGS

An array of up to five LINA loudspeakers can be flown with the MUB-MINA/LINA U-bracket at a 5:1 safety factor. When flying any number of LINAs with the U-bracket, the U-bracket must be secured to the mounting surface with either the two 1/2-inch center holes or the four 1/4-inch corner holes.

Table 11: MUB-MINA/LINA Load Ratings

Mounting Point	Safety Factor	Number of Flown LINAs	MUB-MINA/LINA Mounting Points
Two 0.5 in center holes	5:1	Two LINAs (86.8 lbs, 39.2 kg) with the load evenly distributed on the two points	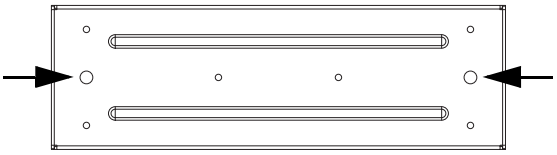
Four 0.25 in corner holes	5:1	Five LINAs (217 lbs, 98 kg) with the load evenly distributed on the four points	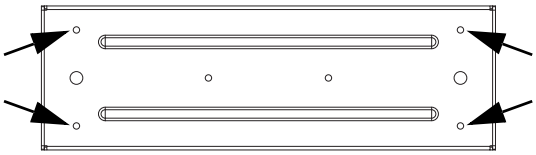
Two 0.25 in center holes	NA	**Not rated for flown applications**; these holes should only be used to attach the U-bracket to a pole-mount adapter.	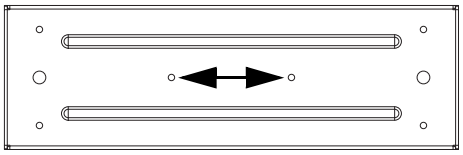 Not rated for flown applications

CAUTION: When mounting the MUB-MINA/LINA on a pole, make sure the pole and pole-mount adapter have been rated to support the full weight of the U-bracket and loudspeakers. Observe all safety precautions specified by the pole and pole-mount adapter manufacturer.

MUB-MINA/LINA ANGLE SETTINGS

To allow for a range of angles for the attached LINA, one end of the MUB-MINA/LINA U-bracket has three fixed holes and the other end has a single fixed hole and a slot. The U-bracket's holes and slots align with LINA's attachment points (two per side). The screws and washers included with the MUB-MINA/LINA kit secure the U-bracket to the LINA cabinet. Tables 12–15 on the following pages show the available angles for both flown and floor- and pole-mount configurations of the MUB-MINA/LINA.

- When using the MUB-MINA/LINA U-bracket for flown configurations, the U-bracket can be oriented for either maximum downtilt (with the slot near the front of the loudspeakers) or maximum uptilt (with the slot near the rear of the loudspeakers).
- When using the MUB-MINA/LINA U-bracket for floor- and pole-mounted configurations, the U-bracket can be oriented for either maximum downtilt (with the slot near the rear of the loudspeakers) or maximum uptilt (with the slot near the front of the loudspeakers).

Table 12: MUB-MINA/LINA Flown, Fixed Angles

Flown, Maximum Downtilt Fixed (0°, –5°)	Flown, Maximum Uptilt Fixed (–5°, –10°)
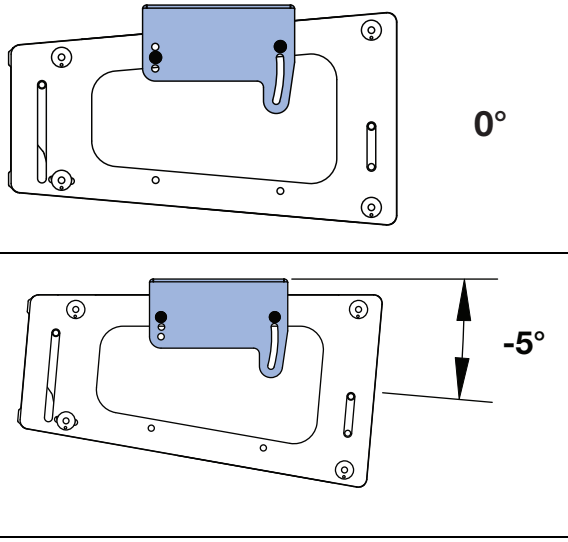	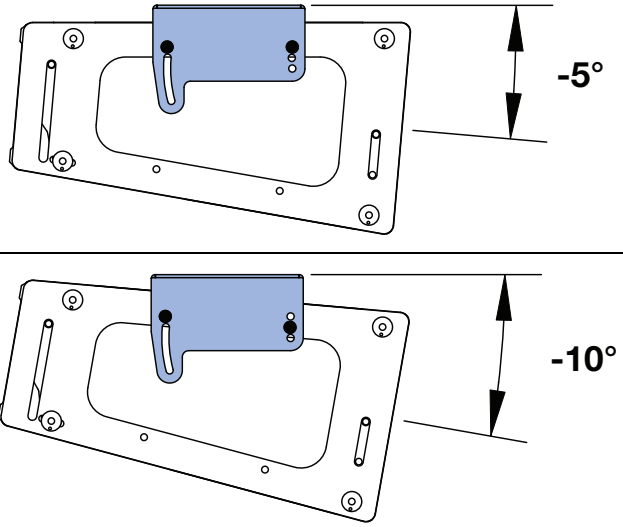

Table 13: MUB-MINA/LINA Flown, Adjustable Angles

Flown, Maximum Downtilt Adjustable (0° to 20°)	Flown, Maximum Uptilt Adjustable (–10° to +10°)
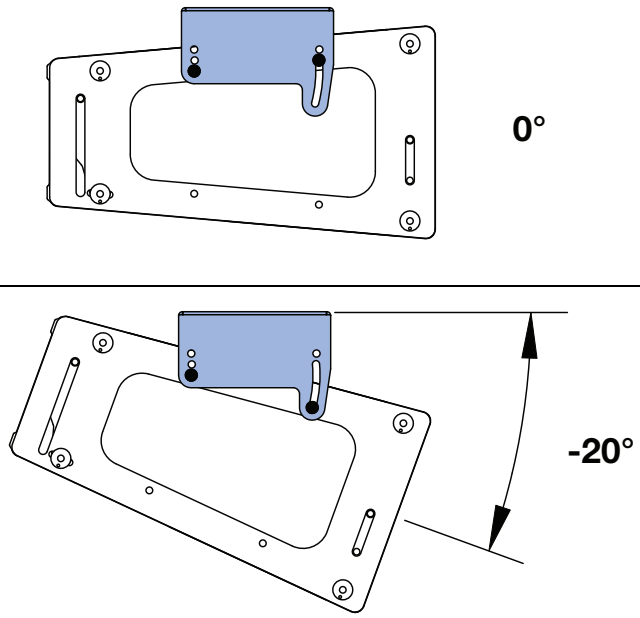	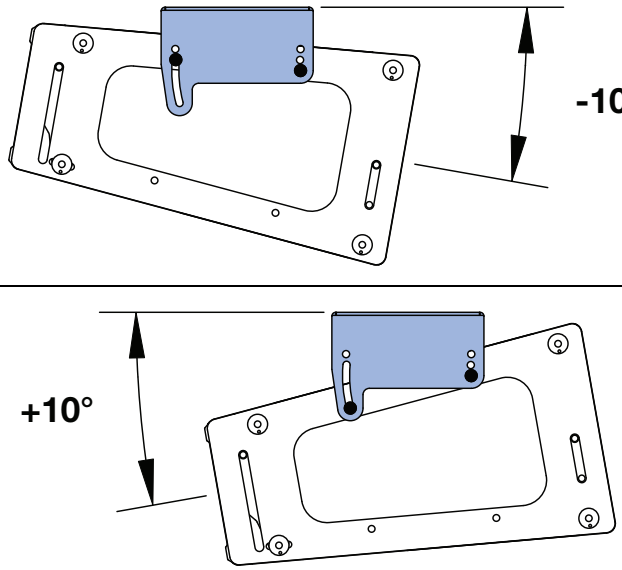

NOTE: For multiple flown cabinets, the MUB-MINA/LINA slot is not recommended for variable adjustments since the angle could change over time due to the weight of the cabinets.

MUB-MINA/LINA FLOOR-MOUNT CONFIGURATIONS

The MUB-MINA/LINA U-bracket can be mounted to a floor to aim a single LINA loudspeaker, or it can be used for stacking up to two LINA loudspeakers. The MUB-MINA/LINA U-bracket should be secured to the floor with fasteners placed in its four corner holes. Make sure to use fasteners appropriate for the floor surface. The LINA cabinet is secured to the U-bracket with the screws and washers included with the MUB-MINA kit. A second LINA cabinet can be stacked on top of the first cabinet and secured with the top unit's GuideALinks.

For floor-mounted configurations, the MUB-MINA/LINA can be oriented for either maximum downtilt (with the slot near the rear of the loudspeakers) or maximum uptilt (with the slot near the front of the loudspeakers).

- For a single floor-mounted cabinet, the MUB-MINA/LINA supports continuous angles from +10 to –10 degrees in the maximum downtilt orientation, and continuous angles from 0 to +20 degrees in the maximum uptilt orientation.
- For two floor-mounted cabinets, the MUB-MINA/LINA supports fixed angles of 0, +5, and +10 degrees depending on the orientation.

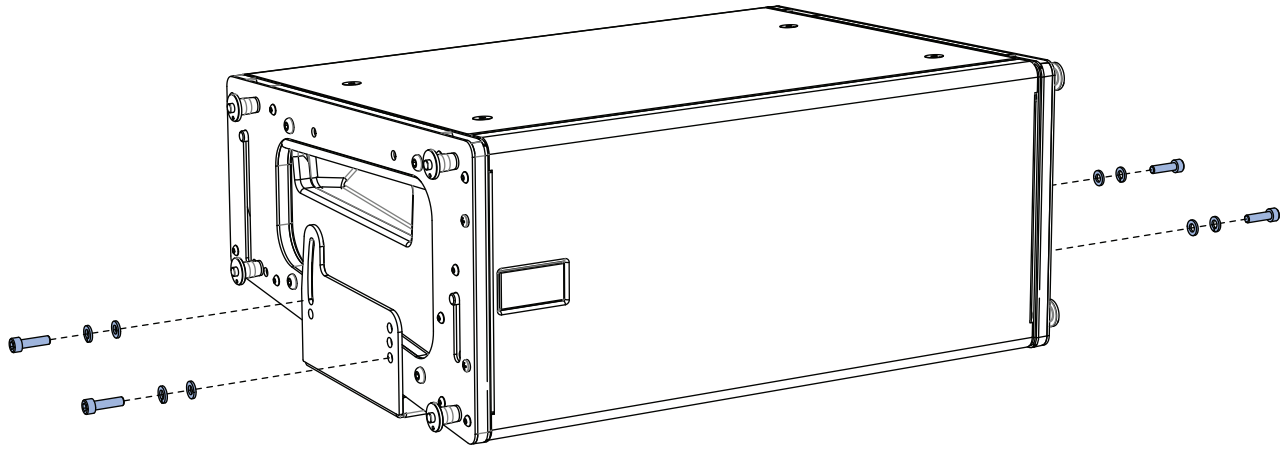

Figure 54: Floor-Mounted MUB-MINA/LINA with One LINA

For illustrations showing which MUB-MINA/LINA mounting holes and slot configurations to use to achieve specific angles for floor-mount applications, see Table 14 and Table 15 on page 62.

Table 14: MUB-MINA/LINA Floor/Pole-Mount, Fixed Angles

Flown/Pole-Mount, Maximum Downtilt Fixed (+5°, +10°)	Floor/Pole-Mount, Maximum Uptilt Fixed (0°, +5°)
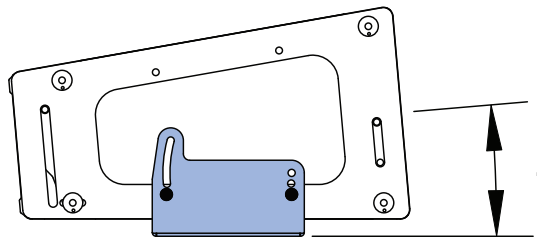	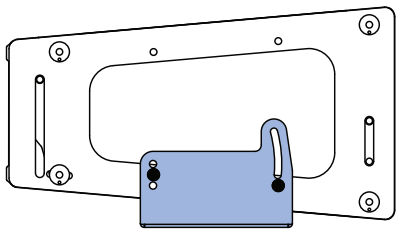
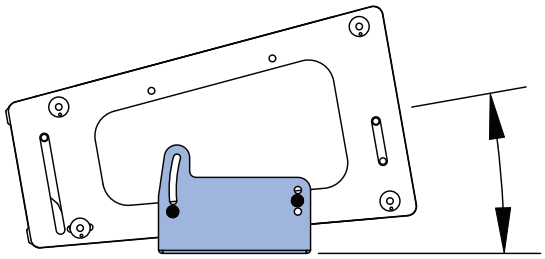	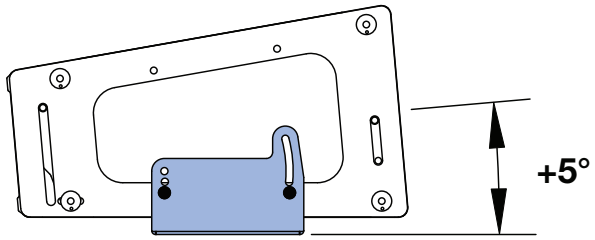

Table 15: MUB-MINA/LINA Floor/Pole-Mount, Adjustable Angles

Floor/Pole-Mount, Maximum Downtilt Adjustable (+10° to –10°)	Floor/Pole-Mount, Maximum Uptilt Adjustable (0° to +20°)
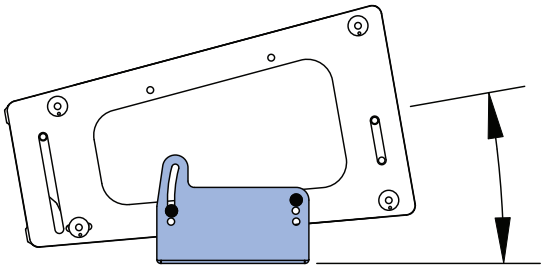	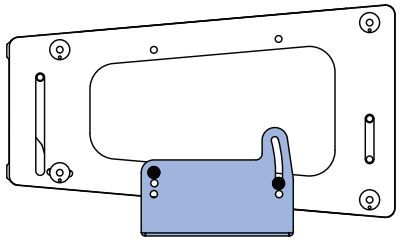
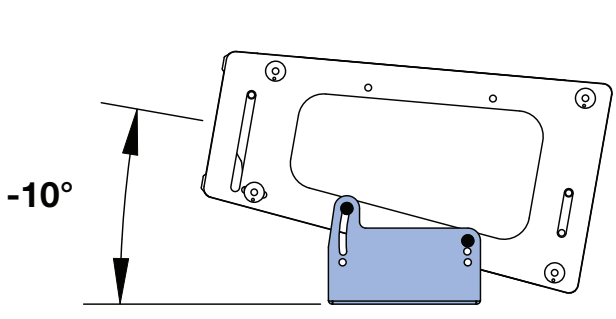	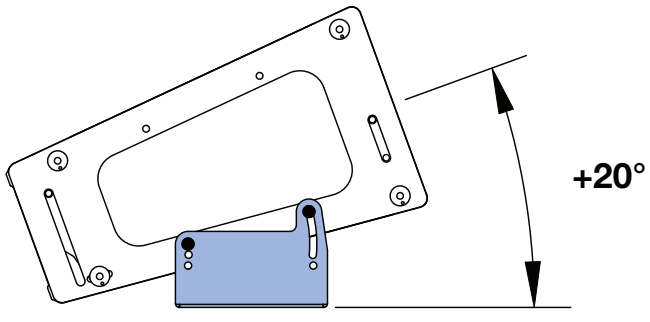

MUB-MINA/LINA POLE-MOUNT CONFIGURATIONS

Up to two LINA loudspeakers can be pole-mounted with the MUB-MINA/LINA U-bracket. The MUB-MINA/LINA U-bracket should be secured to the pole-mount adapter with fasteners placed in the U-bracket's two 1/4-inch, non-threaded, center holes. The LINA cabinet is secured to the U-bracket with the screws and washers included with the MUB-MINA/LINA kit. A second LINA cabinet can be stacked on top of the first cabinet and secured with the top unit's GuideALinks.

For pole-mounted configurations, the MUB-MINA/LINA can be oriented for either maximum downtilt (with the slot near the rear of the loudspeakers) or maximum uptilt (with the slot near the front of the loudspeakers).

- For a single pole-mounted cabinet, the MUB-MINA/LINA supports continuous angles from +10 to –10 degrees in the maximum downtilt orientation, and angles from 0 to +20 degrees in the maximum uptilt orientation.
- For two pole-mounted cabinets, the MUB-MINA/LINA supports fixed angles of 0, +5, and +10 degrees depending on the orientation.

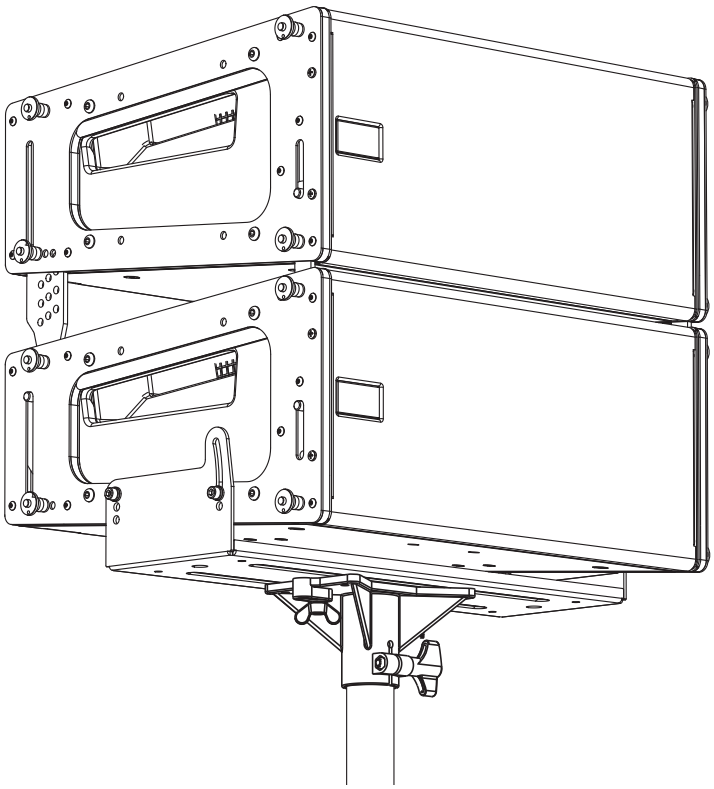

Figure 55: Pole-Mounted MUB-MINA/LINA using 35MM Pole Stand Adapter (PN 40.010.971.01) to Support Two LINAs

CAUTION: When mounting the MUB-MINA/LINA on a pole, make sure the pole and pole-mount adapter have been rated to support the full weight of the U-bracket and loudspeakers. Observe all safety precautions specified by the pole and pole-mount adapter manufacturer.

NOTE: For illustrations showing which MUB-MINA/LINA mounting holes and slot configurations to use to achieve specific angles for pole-mount applications, see Table 14 and Table 15 on page 62.

MUB-MINA/LINA CEILING-MOUNT CONFIGURATIONS

The MUB-MINA/LINA U-bracket can be mounted to a ceiling to aim a single LINA loudspeaker, or it can be used for arrays of up to five LINA loudspeakers when using the four 1/4-inch corner holes (see Table 11). The MUB-MINA/LINA U-bracket should be secured to the ceiling with fasteners placed in its four 1/4-inch, corner holes. Make sure to use fasteners appropriate for the ceiling surface and rated to meet or exceed the weight of the MUB-MINA/LINA and loudspeakers. The LINA cabinet is secured to the U-bracket with the screws and washers included with the MUB-MINA/LINA kit. Additional cabinets are attached to the top cabinet with the top unit's GuideALinks.

For ceiling-mounted configurations, the MUB-MINA/LINA can be oriented for either maximum downtilt (with the slot near the front of the loudspeakers) or maximum uptilt (with the slot near the rear of the loudspeakers).

- For a single flown cabinet, the MUB-MINA/LINA supports continuous angles of 0 to –20 degrees in the maximum downtilt orientation, and angles of +10 to –10 degrees in the maximum uptilt orientation.
- For multiple flown cabinets, the MUB-MINA/LINA supports fixed angles of 0, –5, and –10 degrees depending on the orientation.

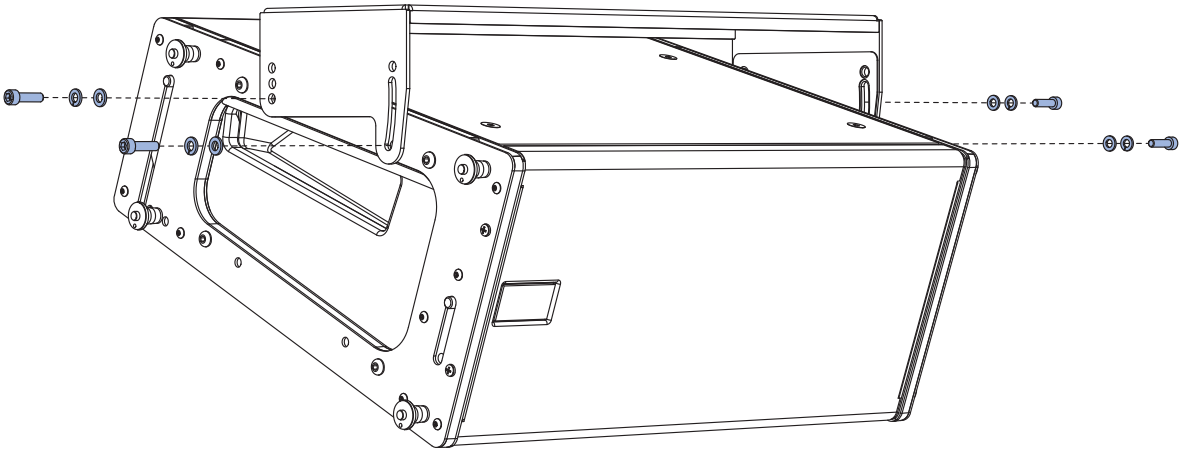

Figure 56: Ceiling-Mounted MUB-MINA/LINA with One LINA

NOTE: For multiple cabinets, the MUB-MINA/LINA slot is not recommended for variable adjustments since the angle could change over time due to the weight of the cabinets.

NOTE: For illustrations showing which MUB-MINA/LINA mounting holes and slot configurations to use to achieve specific angles for ceiling-mount applications, see Table 12 and Table 13 on page 60.

NOTE: The center of gravity of the array will indicate specific truss attachment points that do not cause rotational tension. The attachment points should be tightened while in this "balanced" position and the final tilt of the loudspeaker(s) evaluated for desired coverage.

MUB-MINA/LINA FLOWN CONFIGURATIONS

The MUB-MINA/LINA U-bracket with up to two LINA can be flown from a truss with two C-clamps attached to the bracket's two 1/2-inch center holes (see Table 11). Make sure to use rigging hardware rated to meet or exceed the weight of the U-bracket and suspended loudspeakers.

For flown configurations, the MUB-MINA/LINA can be oriented for either maximum downtilt (with the slot near the front of the loudspeakers) or maximum uptilt (with the slot near the rear of the loudspeakers).

- For a single flown cabinet, the MUB-MINA/LINA supports continuous angles of 0 to –20 degrees in the maximum downtilt orientation, and angles of +10 to –10 degrees in the maximum uptilt orientation.
- For two flown cabinets, the MUB-MINA/LINA supports fixed angles of +10, 0, –5, –10, and –20 degrees with either orientation.

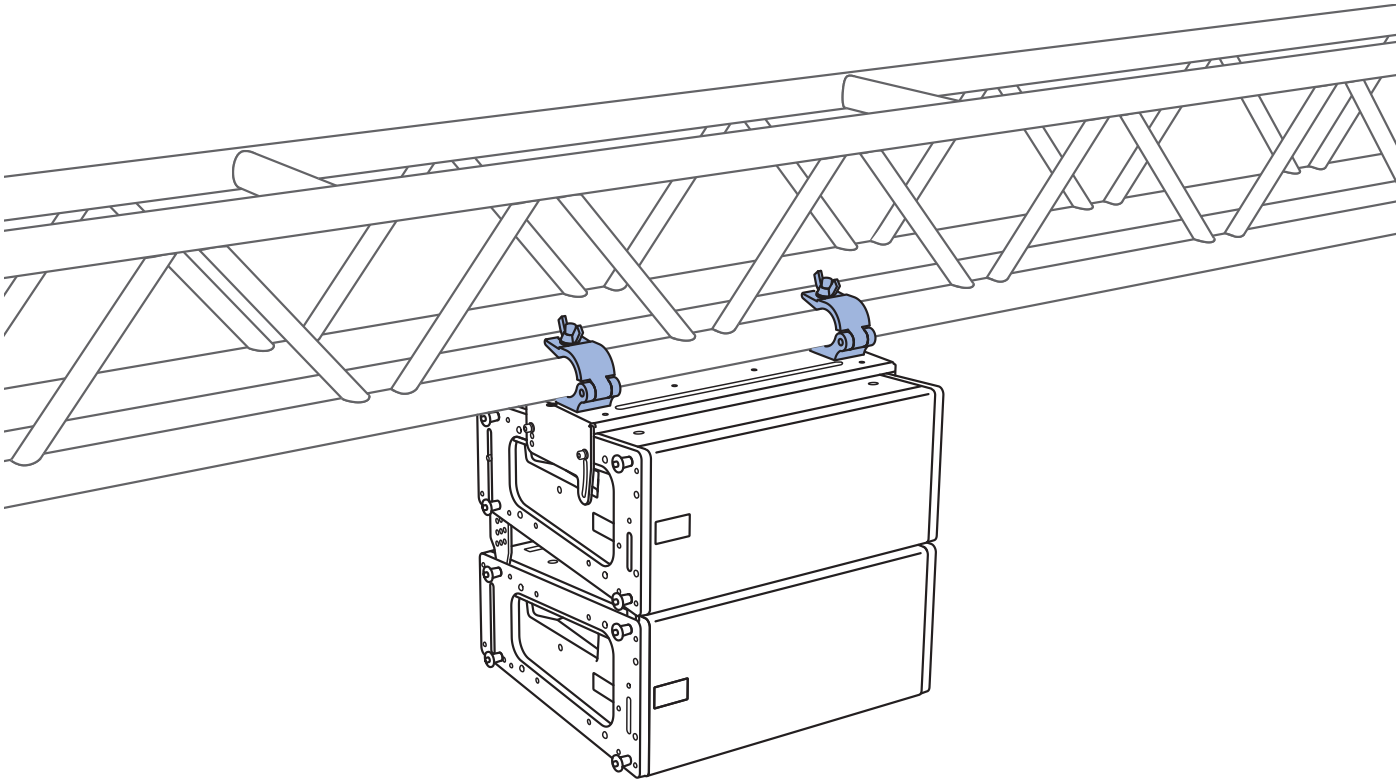

Figure 57: Flown MUB-MINA/LINA with Two LINAs

CAUTION: Up to two cabinets may be flown using the two center 1/2-inch holes with the load evenly distributed on the two points. Use MAPP to verify rigging configurations.

NOTE: For two flown cabinets, the MUB-MINA/LINA slot is not recommended for variable adjustments, because the angle could change over time due to the weight of the cabinets.

NOTE: For illustrations showing which MUB-MINA/LINA mounting holes and slot configurations to use to achieve specific angles for flown applications, see Table 12 and Table 13 on page 60.

CHAPTER 12: MPK POLE AND POLE-MOUNT RECEPTACLE

POLE-MOUNT RECEPTACLE

All 750-LFCs come standard with an integral pole-mount receptacle that allows the subwoofer to be easily paired with ULTRA series loudspeakers. You can mount Meyer Sound loudspeakers on top of the 750-LFC with a heavy-duty pole and pole-stand adapter.

The 750-LFC pole-mount receptacle comes in two sizes:

- **U.S. version**: 1 1/2 in (38 mm)
- **E.U. version**: 1 3/8 in (35 mm, M20 thread at the bottom)

Meyer Sound offers accessories for this purpose:

- 35MM Pole Stand Adapter PN (40.010.971.01)
- MSA-STAND Adapter Cup 35MM (PN 40.086.013.01)
- MPK-POLE-35MM-M20 Adjustable Pole Mount (PN 40.010.973.01)

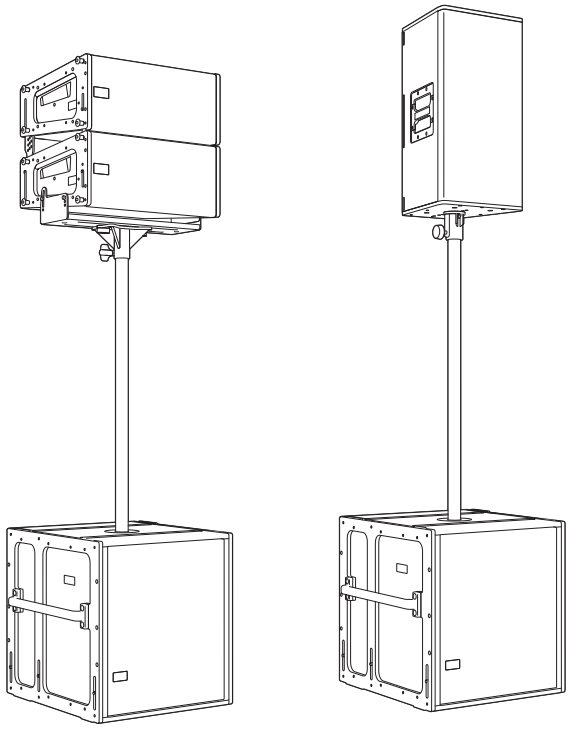

Figure 58: Pole and Pole-Mount Adapter: 750-LFC with 2 LINA, MUB-MINA/LINA U-bracket, and 35MM Pole Stand Adapter (left); 750-LFC with ULTRA series speaker on MSA-STAND Adapter Cup 35MM (right)

The following Meyer Sound loudspeakers can be mounted on top of the 750-LFC. Make sure that the pole and pole-mount adapter can support the weight of the mounted loudspeakers and that they are installed according to the manufacturer's instructions.

- One MINA or LINA with MUB-MINA/LINA U-bracket (47 lb, 21.3 kg)
- Two MINA or LINA with MUB-MINA/LINA U-bracket (90 lb, 40.8 kg).One UPA-1P or UPA-2P (77 lb, 34.9 kg)
- One UPJ-1P (46 lb, 20.9 kg)
- One UPJunior (28 lb, 12.7 kg)
- Two UPJuniors with MUB-UPJunior U-bracket and MAAM-UPJunior array adapter (70 lb, 31.8 kg)
- One ULTRA-X40/42 (55 lb, 25 kg)

⚠ **CAUTION:** Make sure the pole and pole-mount adapter can support the total weight of the mounted loudspeakers. In particular, heavier loudspeakers are less stable on taller pole mounts. Observe all safety precautions specified by the pole manufacturer.

CHAPTER 13: THE MCF-MINA/LINA CASTER FRAME

The MCF-MINA/LINA caster frame safely supports up to five LINAs for transport and groundstacking, making it easy to assemble or disassemble arrays. The caster frame's sturdy construction allows it be conveniently moved with forklifts.

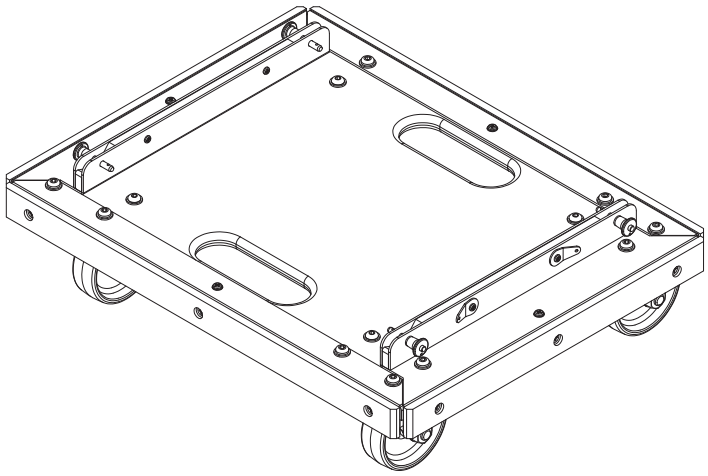

Figure 59: MCF-MINA/LINA Caster Frame

The LINA at the bottom of the stack attaches securely to the caster frame with its GuideALinks and is secured with the four quick-release pins (0.25 in x 0.90 in, black button with 6-inch lanyard, PN 134.036) included with the caster frame. The configuration of the GuideALinks for the attached LINA determines its tilt, which can be from +6 degrees (uptilt) to –5 degrees (downtilt). See Figure 61 and Table 17.

⚠ **CAUTION:** Always use the quick-release pins included with the MCF-MINA/LINA caster frame to secure groundstacked LINAs to the grid. Do not use the quick-release pins included with LINA in the frame as they are shorter and will not lock in place.

MCF-MINA/LINA Kit Contents

Table 16: MCF-MINA/LINA Kit Contents (PN 40.207.102.01)

	Part Number	Quantity	Description
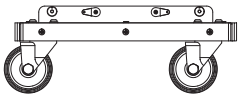	45.207.126.01	1	MCF-MINA/LINA caster frame
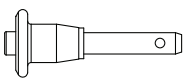	PN 134.036	4	0.25 in x 0.90 in quick-release pins

MCF-MINA/LINA Dimensions

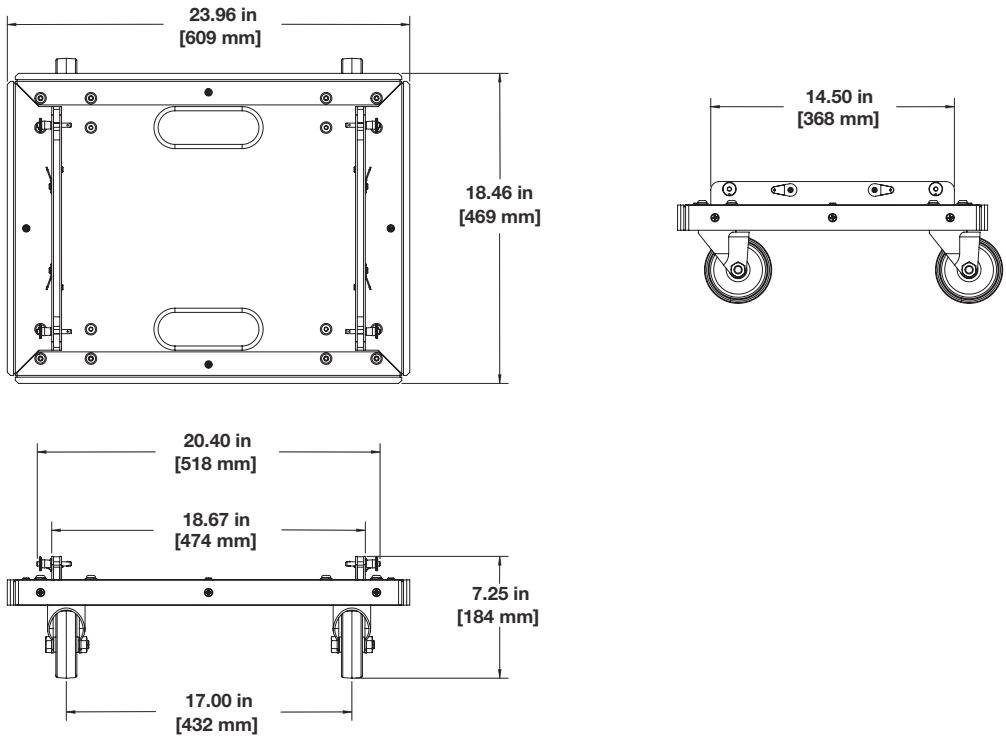

Figure 60: MCF-MINA/LINA Caster Frame Dimensions

MCF-MINA/LINA Weight: 28.0 lbs (12.7 kg)

Loudspeaker to MCF-MINA/LINA Angles

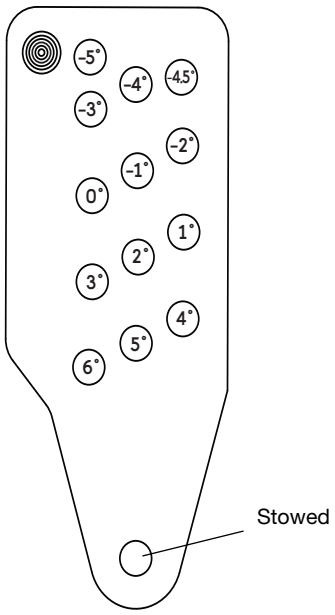

Figure 61: LINA Rear GuideALink Angles Between Loudspeaker and MCF-MINA/LINA

Table 17: Loudspeaker to MCF-MINA/LINA Angles

Rear GuideALink Label Position	Actual Groundstack Angle
0	–5°
0.5	–4.5°
1	–4°
2	–3°
3	–2°
4	–1°
5	0°
6	+1°
7	+2°
8	+3°
9	+4°
10	+5°
11	+6°

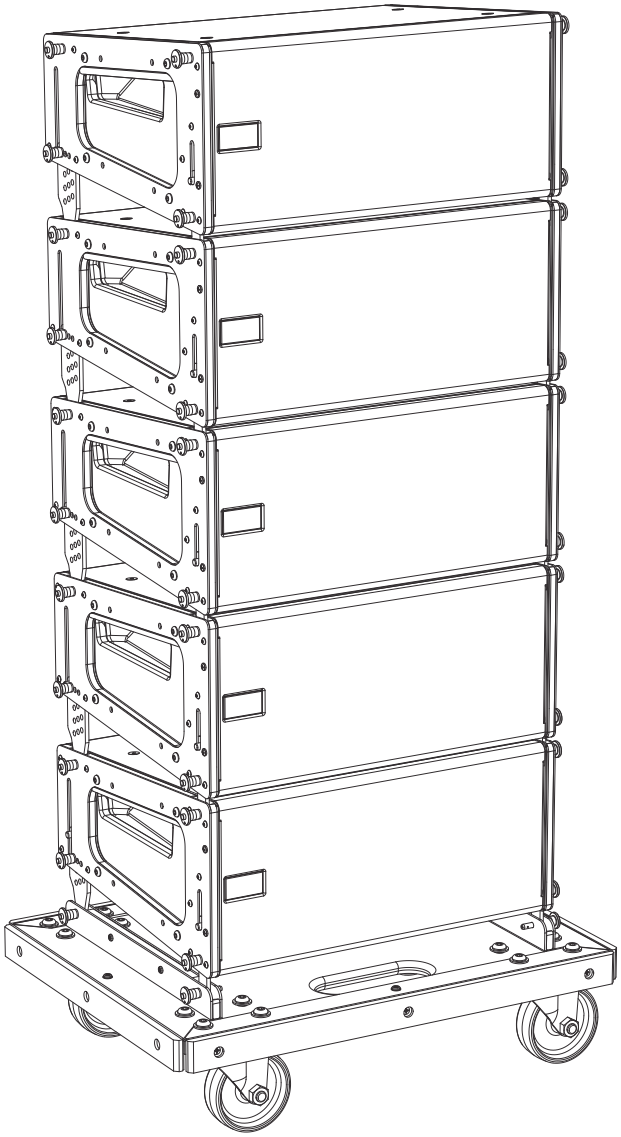

Figure 62: MCF-MINA/LINA Caster Frame with LINA Stack

TIP: The MG-MINA/LINA grid can travel installed on top of LINA stacks.

TIP: Durable nylon covers, sized for stacks of 3, 4, and 5 units, are available to ensure the LINA is completely road ready.

SAFETY GUIDELINES FOR THE MCF-MINA/LINA CASTER FRAME

- Do not stack more than five LINAs.
- Avoid moving stacks in the front-to-back direction of the LINAs (the long side); always move stacks sideways to avoid tipping.

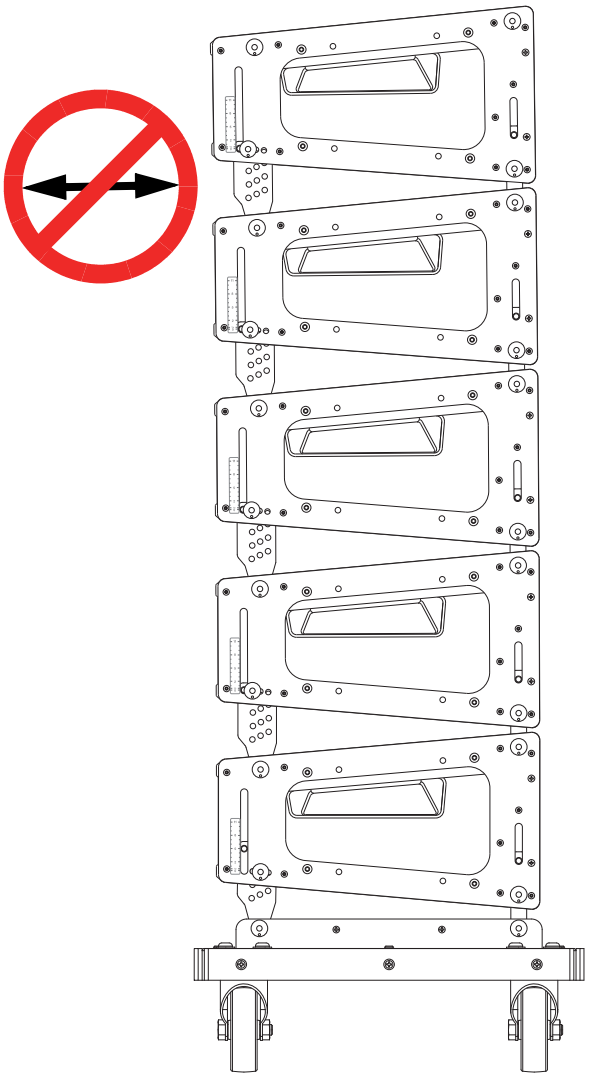

Figure 63: Proper/Improper Stack Movement Direction

- When transporting a non-curved LINA stack with 0-degree splay angles, configure the rear GuideALinks for the bottom LINA so it is attached to the caster frame at 0 degrees (using the 5-degree hole in the LINA GuideALinks).
- When transporting a curved LINA stack with wide splay angles, configure the rear GuideALinks for the bottom LINA so it is attached to the caster frame at –5 degrees (using the 0-degree hole in the LINA GuideALinks), to compensate for the stack's center of gravity.
- When groundstacking LINAs with the caster frame, make sure that all four caster wheels are blocked to prevent the stack from rolling away.

⚠ **CAUTION:** LINA stacks with severe angles between loudspeakers are less stable. When possible, to avoid tipping, transport stacks with LINAs as close as possible to 0 degrees with respect to the caster frame.

CHAPTER 14: MCF-750 CASTER FRAME

The MCF-750 caster frame safely transports up to three 750-LFCs, making it easy to assemble and disassemble arrays in blocks of three cabinets. There are two versions available, one for MRK-750-equipped cabinets (PN 40.271.070.02), the other for cabinets without rigging (PN 40.271.070.03). The caster frame's sturdy construction allows it to be conveniently moved with forklifts (when cabinets are equipped with the MRK-750 rigging kit only). The MCF-750 can also be used to support 750-LFCs in groundstacked configurations.

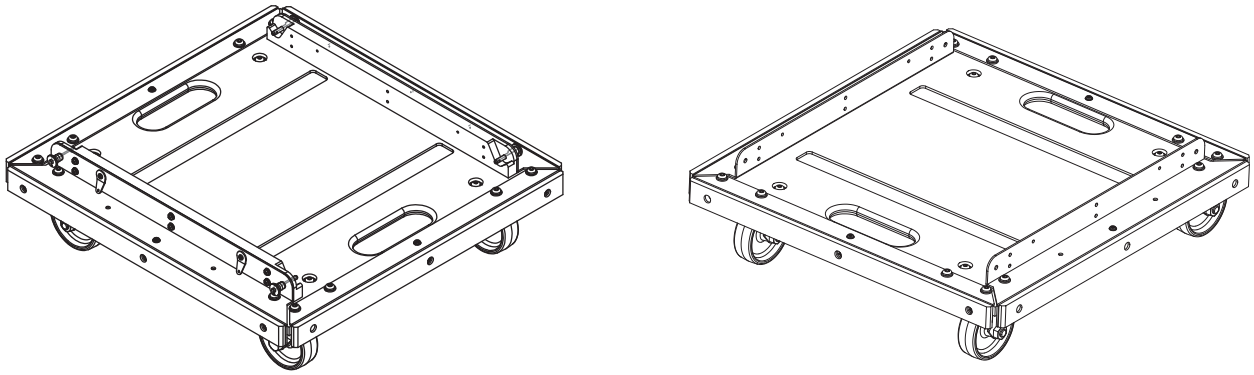

Figure 64: MCF-750 Caster Frame for cabinets with rigging (left) and without rigging (right)

The caster frame includes four fixed, 0-degree link slots that attach to the cabinet at the bottom of the stack and are secured with the quick-release pins (0.25 in x 0.90 in, black button with 6-inch lanyard, PN 134.036) included with the 750-LFC.

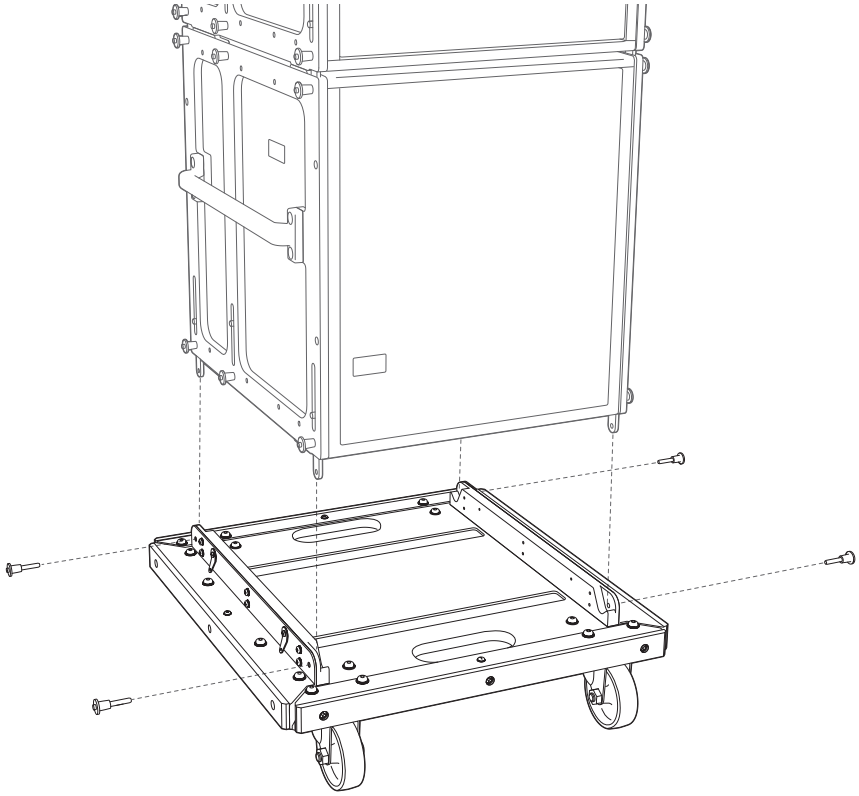

Figure 65: MCF-750 Caster Frame with 750-LFC Stack, Exploded View

NOTE: Two versions of the MCF-750 caster frame are available from the factory—configured for cabinets with the MRK-750 rigging kit (PN: 40.271.070.02) or without (PN: 40.271.070.03).

750-LFC cabinets need not be equipped with the MRK-750 rigging kit for transport with the caster frame. The loudspeaker skids ensure that cabinets stack cleanly on the caster frame. However, to avoid tipping, straps (not included) should be used when transporting cabinets that have not been fitted with the MRK-750 rigging kit.

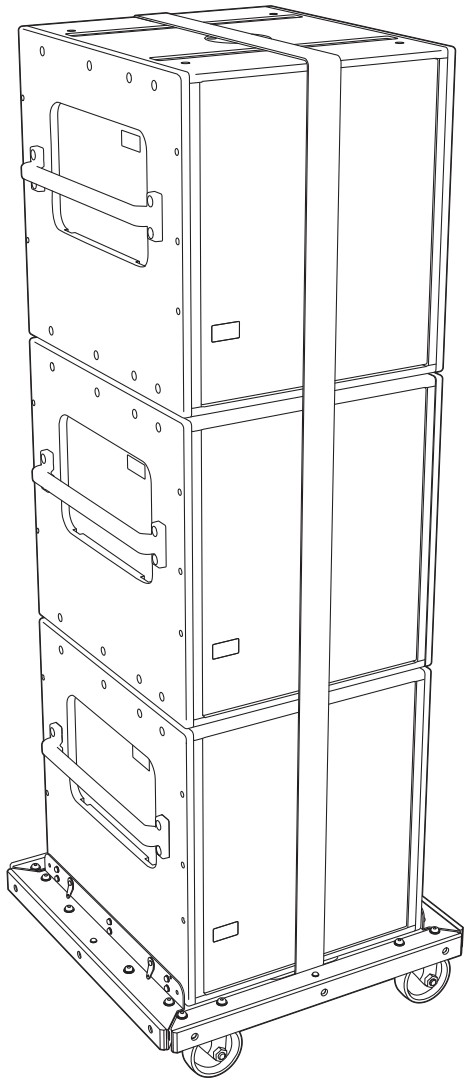

Figure 66: MCF-750 Caster Frame, (3) 750-LFCs (without Rigging), and Straps (Not Included)

750-LFC cabinets equipped with the MRK-750 rigging kit provide for more secure transport as the bottom cabinet can be linked and pinned to the caster frame. The three cabinets can be linked and pinned together as well.

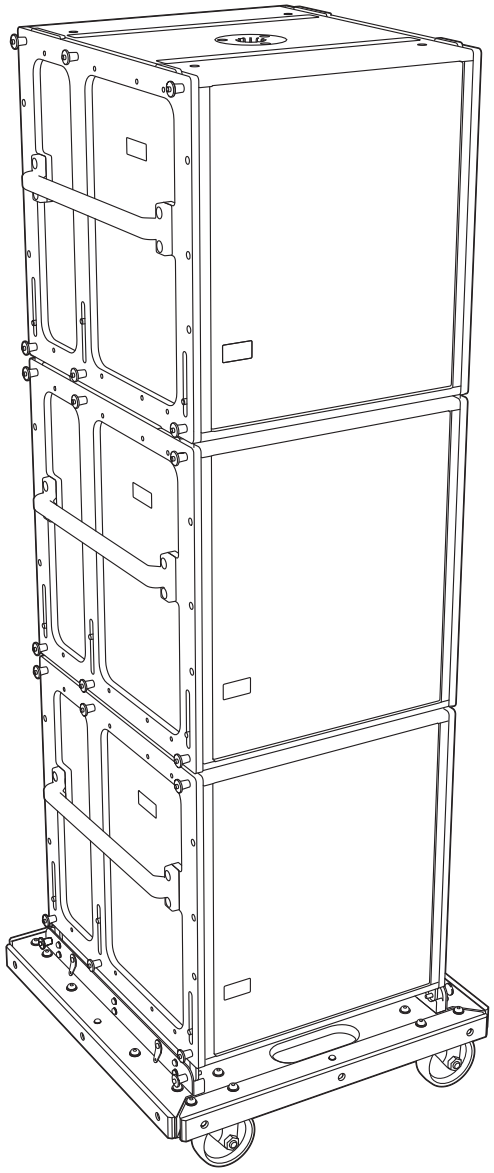

Figure 67: MCF-750 Caster Frame, (3) 750-LFCs (with Rigging)

TIP: Durable nylon pullover covers, sized for stacks of 2 units or 3 units, are available to protect 750-LFC cabinets during transport. Special wraparound covers are also available to accommodate stacks with grids on top.

TIP: The MG-MINA/LINA/750-LFC grid can travel installed on top of 750-LFC stacks on the MCF-750 caster frame.

DIMENSIONS: MCF-750 CASTER FRAME WITH RIGGING

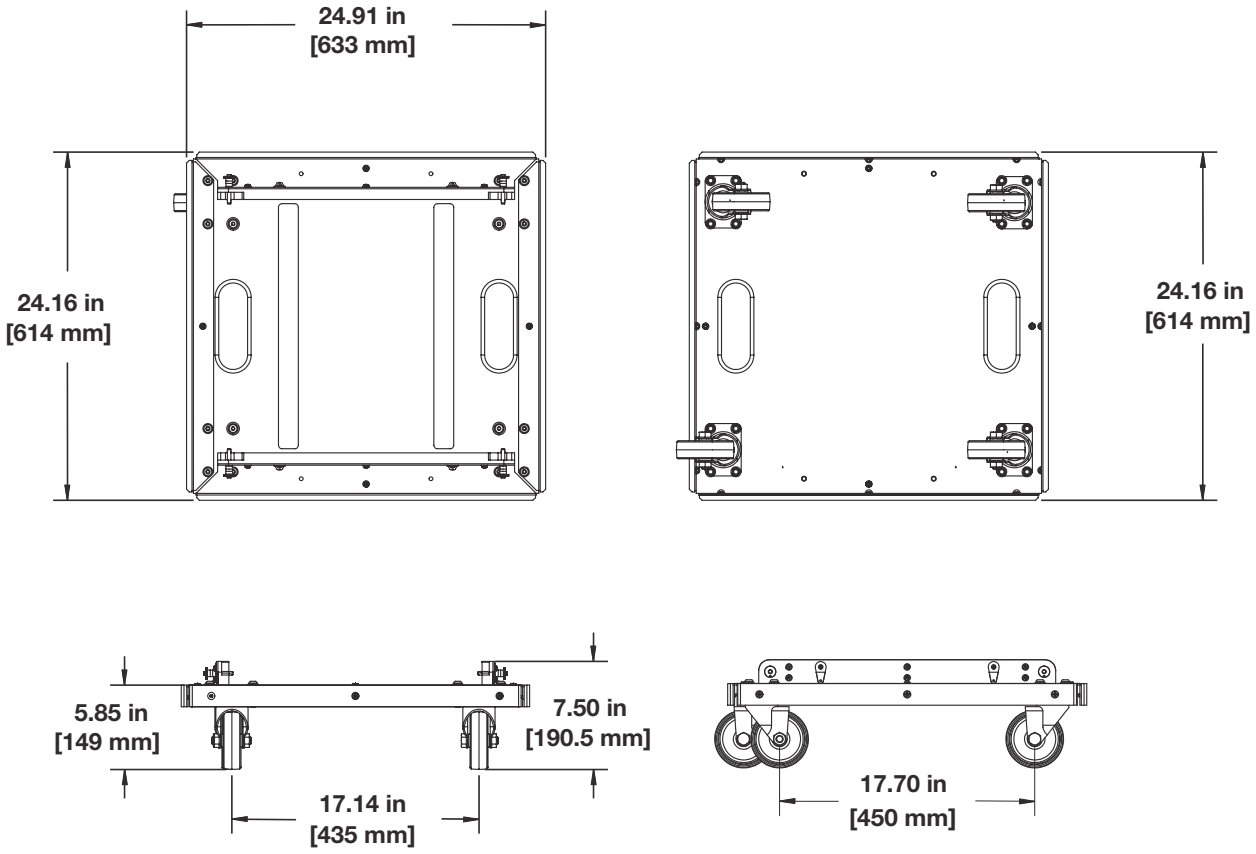

Figure 68: MCF-750 Caster Frame (for cabinets with rigging) Dimensions

MCF-750 Caster Frame with Rigging Weight: 34 lbs (15.4 kg)

DIMENSIONS: MCF-750 CASTER FRAME WITHOUT RIGGING

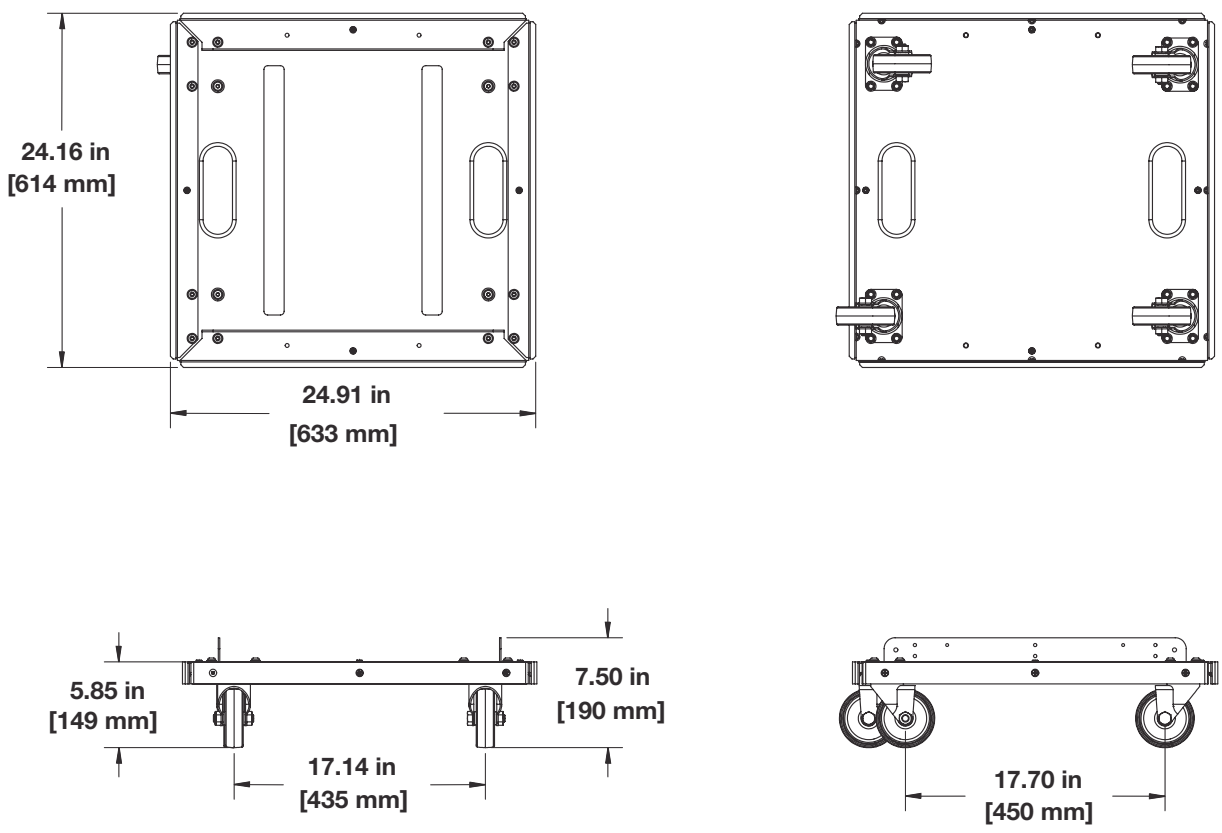

Figure 69: MCF-750 Caster Frame (for cabinets without rigging) Dimensions

MCF-750 Caster Frame without Rigging Weight: 28.7 lbs (13.0 kg)

SAFETY GUIDELINES FOR THE MCF-750 CASTER FRAME

- Do not stack more than three cabinets on the MCF-750 caster frame.
- Use straps when transporting 750-LFCs that have not been fitted with the MRK-750 rigging kit.
- To avoid tipping, transport stacks with loudspeakers linked and locked at 0-degree splay angles.
- Forklifts should only be used to move the MCF-750 caster frame when cabinets have been outfitted with the MRK-750 rigging kit and the cabinets have been securely linked.
- When lifting a stack with a forklift, always keep the forks wide and close to the caster frame's wheels. Failing to do so may bend the caster frame or cause the stack to tip.
- When groundstacking 750-LFCs with the caster frame, make sure that all four caster wheels are blocked to prevent the stack from rolling away.
- The caster frame must be removed before flying a loudspeaker array.

APPENDIX A: ASSEMBLING ARRAYS WITH THE GRID

NOTE: The quick-release pins (0.25 in x 0.53 in, black button, PN 134.039) that are included with each LINA are referred to as **loudspeaker pins** below. The quick-release pins (0.25 in x 0.90 in, black button with 6 in lanyard, PN 134.036) that come with the grid are referred to as **grid pins**.

To assemble a LINA array with the MG-MINA/LINA/750-LFC grid:

1. Place the MG-MINA/LINA/750-LFC grid on the floor or road case in the approximate location where the rigging points have been established and the motors have been hung. Orient the grid for the desired configuration:

- **Maximum Downtilt:** Use this option to place the flown LINAs closer to the front of the grid, to achieve a few more degrees of downtilt.
- **Maximum Uptilt:** Use this option to place the flown LINAs closer to the rear of the grid, to achieve a few more degrees of uptilt.

NOTE: Use the Center of Gravity function in MAPP to determine which orientation distributes the front and rear rigging load most evenly. See “Estimating the Center Pickup Point with MAPP” on page 31.

2. Attach 5/8-inch shackles to the desired attachment points on the MG-MINA/LINA/750-LFC grid.

NOTE: If using only one of the center pickup points, use the Center of Gravity function in MAPP to determine to which point to attach the shackle.

NOTE: A 2-foot length of wire rope between the shackle and the motor hook is recommended to prevent the chain bags from either resting on top of the enclosure, causing the chain to spill out, or from hanging in front of the loudspeaker, obstructing the high-frequency acoustic output.

3. Lower the motors so the hooks can be attached to the 5/8-inch shackles. Once the shackles are secured to the chain hooks, raise the grid slightly higher than the first stack of LINA loudspeakers to be linked.
4. Unstow the grid’s links and pin them at the desired LINA angle with respect to the grid (for the maximum downtilt configuration, 0 or –5 degrees; for the maximum uptilt configuration, –5 or –10 degrees). Make sure to use the **grid pins** included with the MG-MINA/LINA/750-LFC grid to pin the links.
5. Use the MCF-MINA/LINA caster frame to roll the first LINA stack into position under the grid. Up to five LINA loudspeakers can be safely transported with the caster frame.
   a. Remove the pins from the link slots of the top loudspeaker of the stack.
6. Lower the grid to within approximately 1 inch of the top LINA cabinet. Adjust the placement of the LINA stack so the top cabinet’s link slots align with the grid links. Bump the motors down so the grid links are inserted into the top cabinet’s link slots. Pin the grid links to the top cabinet using the **loudspeaker pins** included with LINA.
7. Check that each grid link is secured to the grid with the **grid pins**, and that each grid link is secured to the top cabinet with the **loudspeaker pins**. Ensure that each cabinet of the stack is securely pinned to the one below by verifying that all four GuideALinks of each cabinet are pinned to cabinet below it. Adjust the splay angles between the loudspeakers as necessary.

NOTE: To reduce the tension on pins when changing angles between loudspeakers, it may be necessary to bump the motors or lift the loudspeakers by hand.

8. Attach the AC power, audio, and RMS cables to the loudspeakers.

9. Raise the grid so the suspended loudspeakers are slightly off the floor and remove the two rear quick-release pins securing the bottom cabinet's GuideALinks to the caster frame. Rest the rear wheels of the caster frame on the floor and remove the two front quick-release pins to detach the caster frame from the bottom cabinet. Retract the GuideALinks for the bottom cabinet and pin them in the stowed position.
10. Raise the grid so the suspended loudspeakers are slightly higher than the next stack of LINAs to be linked. Roll away the empty caster frame.
11. Roll the next stack of LINAs into position under the suspended loudspeakers. Remove two front pins from top of cabinet of stack being attached. Lower the suspended loudspeakers until they are almost touching the downstage edge of the top cabinet to be attached. Adjust the placement of the LINA stack so that when the GuideALinks from the bottom suspended cabinet are unpinned they will fall cleanly into the link slots of the cabinet being attached.

   CAUTION: If the GuideALinks are not stowed as described in Step 9, you may damage the top of the cabinet being attached by hitting it with a link that is pinned in the extended position.

12. Pin the front GuideALinks first. Remove two rear pins from top cabinet of stack being attached. Position and pin the rear GuideALinks of the suspended loudspeaker to the desired angle. Bump the motors to lower the rear GuideALinks into the link slots of the cabinet being attached and pin.
13. Attach the AC power, audio, and RMS cables to the newly added loudspeakers.
14. Repeat the previous steps until the entire array has been assembled. All loudspeaker-to-loudspeaker links are made with the **loudspeaker pins**.

   NOTE: As loudspeakers are added to the suspended array, try to keep the grid parallel to the stage surface to ease the process of adding more loudspeakers to the array. Failing to do so may place the array's center of gravity in front of the downstage motor, which could make it very difficult to control the angle of the grid and attach the rear links. In some cases, when the array length is longer than 10–12 loudspeakers, it may be necessary to push the suspended array toward the downstage direction and lower the array to close the gap between the rear of the flown and stacked loudspeakers.

TIP: As the flown array is assembled and raised, LINA's front GuideALinks can rotate over 30 degrees forward while pinned, facilitating the connection of the flown, angled array to the loudspeakers on the caster frame. Roll the stack into position so the front GuideALinks align. Pin them, and then **lower the array slightly so that the rear GuideALinks can be pinned**. Finally, unpin the caster frame from the lowest enclosure. Reverse the procedure when striking the array.

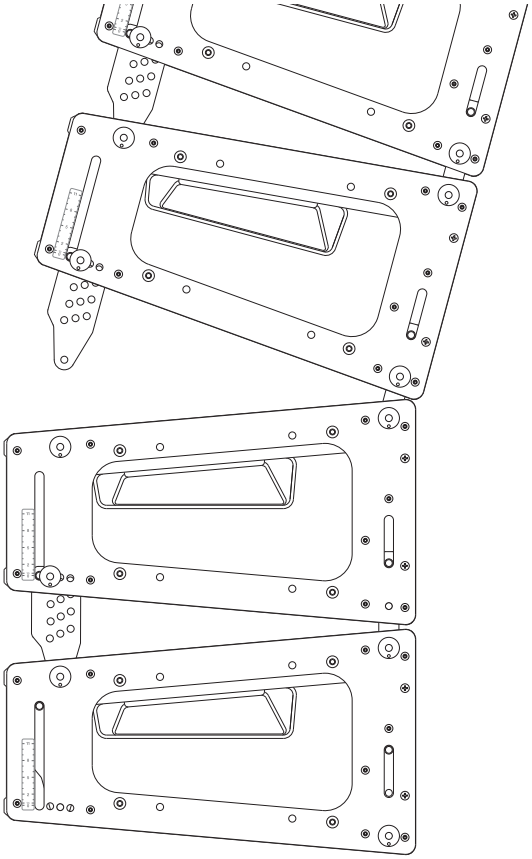

Figure 70: Assembling a LINA Array

CAUTION: Do not lift a LINA stack unless all four GuideALinks have been pinned for the top cabinet. Failing to do so could damage the end frames or GuideALinks of the linked cabinets. Pinning only the front GuideALinks should only be done when attaching a floor stack to a suspended array.

APPENDIX B: ULTRA WEATHER PROTECTION VERSION

Ultra Weather Protection is recommended for applications where loudspeakers will experience exposure to a salt air environment or chemicals, that have no sheltering from corrosive spray or UV exposure, and that cannot be covered or removed during their service life. Examples would include cruise ship exterior areas, ocean-side visitor attractions, swimming pool areas, and themed attractions with wind-carried water spray.

For installations in extremely harsh environments, Meyer Sound offers an Ultra Weather Protection option for the LINA loudspeaker, which includes all of the components of standard Weather Protection, plus the following:

- Extended cabinet finishing with extra thick proprietary coatings
- Special printed circuit board treatments
- Improved corrosion-resistant coatings and materials on select metallic components

Table 18 provides a list of user-accessible hardware component differences for LINA loudspeakers that are ultra weather protected.

Table 18: LINA Ultra Weather Protection Version Part Differences

LINA Part/LINA Accessory	Current Part	UW LINA Part Replacement	Comment
MG-MINA/LINA/750-LFC Multipurpose Grid	MG-MINA/LINA/750-LFC Multipurpose grid (PN 40.207.101.01)	MG-LINA/750-LFC Multipurpose Grid, black (PN 40.207.101.06) or MG-LINA/750-LFC Multipurpose Grid, white (PN 40.207.101.05)	
MG-MINA/LINA/750-LFC Grid to Loudspeaker Fasteners	Grid quick-release pins (with lanyard) 0.25 in x 0.90 in PN 134.036, qty 8	UW bolts, PN 101.629, qty 8 UW nylock nuts, PN 109.059, qty 8	The shoulder bolts and nuts replace the longer quick-release pins (with lanyard) used for both hanging arrays and groundstacking
LINA Loudspeaker to Loudspeaker Fasteners	Loudspeaker quick-release pins 0.25 in x 0.53 in PN 134.039, qty 8	UW lock pins, 0.25 in x 0.53 in PN 134.133, qty 8	
LINA Loudspeaker Part	Rear GuideALink	—	For ultra weatherized versions of the LINA, the 11° Splay Angle position of the Rear GuideALink (see “Rear GuideALinks” on page 14) is not available.



Meyer Sound Laboratories Inc.
2832 San Pablo Avenue
Berkeley, CA 94702
+1 510 486.1166
www.meyersound.com

© 2019
Meyer Sound. All rights reserved.
MG-MINA/LINA/750-LFC Assembly Guide
PN 05.207.101.02 A