MICA™ Compact High-Power Expanded Coverage Curvilinear Array Loudspeaker



Keep these important operating instructions.
Check www.meyersound.com for updates.

DECLARATION OF CONFORMITY ACCORDING TO ISO/IEC GUIDE 22 AND EN 45014

Manufacturer's Name:
Meyer Sound Laboratories Inc.

Manufacturer's Address:
2832 San Pablo Avenue
Berkeley, CA 94702-2204, USA

declares that the product
Product Name: MICA loudspeaker

conforms to the following Product Specifications

Safety:	EN60065: 2002
	IEC60065: 2001
EMC:	EN55103-1: 1997 emission[1]
	EN55103-2: 1997 immunity[2]

This device also complies with EN 55103-1 & -2.
Operation is subject to the following two conditions:
(1) this device may not cause harmful interference, and
(2) this device must accept any interference received, including interference that may cause undesired operation.

Supplementary Information

The product herewith complies with the requirements of the Low Voltage Directive 73/23/EEC and the EMC Directive 89/336/EEC.

Office of Quality Manager
Berkeley, California USA
July 15, 2005

European Contact: Your local Meyer Sound dealer or Meyer Sound Germany, GmbH. Carl Zeiss Strasse 13, 56751 Polch, Germany.
Telephone: 49.2654.9600.58 Fax: 49.2654.9600.59

Environmental specifications for Meyer Sound Electronics products

Operating temperature	0°C to +45°C
Non-operating temperature	-40°C to +75°C
Humidity	to 95% at 35°C
Operating altitude	to 4600 m (15,000ft)
Non-operating altitude	to 6300 m (25,000ft)
Shock	30 g 11 msec half-sine on each of 6 sides
Vibration	10 Hz to 55 Hz (0.010 peak-to-peak excursion)

Made by Meyer Sound Laboratories
Berkeley, California USA
European Office:
Meyer Sound Lab. GmbH
Carl Zeiss Strasse 13
56751 Polch, Germany

3K59 COMMERCIAL AUDIO SYSTEM
US LISTED

N775

© 2006 Meyer Sound. All rights reserved.

MICA™ Compact High-Power Expanded Coverage Curvilinear Array Loudspeaker Operating Instructions

The contents of this manual are furnished for informational purposes only, are subject to change without notice, and should not be construed as a commitment by Meyer Sound Laboratories Inc. Meyer Sound assumes no responsibility or liability for any errors or inaccuracies that may appear in this manual. Except as permitted by applicable copyright law, no part of this publication may be reproduced, stored in a retrieval system, or transmitted, in any form or by any means, electronic, mechanical, recording or otherwise, without prior written permission from Meyer Sound.

MICA, RMS and REM are trademarks of Meyer Sound. Meyer Sound, Meyer Sound MAPP Online, TruPower, SIM, QuickFly and MILO are registered trademarks of Meyer Sound Laboratories Inc. (Reg. U.S. Pat. & Tm. Off.). All third-party trademarks mentioned herein are the property of their respective trademark holders.

Printed in the U.S.A.

Part Number: 05.147.005.01 B

SYMBOLS USED

These symbols indicate important safety or operating features in this booklet and on the chassis:

		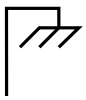	
Dangerous voltages: risk of electric shock	Important operating instructions	Frame or chassis	Protective earth ground
Pour indiquer les risques résultant de tensions dangereuses	Pour indequer important instructions	Masse, châssis	Terre de protection
Zu die gefahren von gefährliche spanning zeigen	Zu wichtige betriebs-anweisung und unter-haltsanweisung zeigen	Rahmen oder chassis	Die schutzerde
Para indicar voltajes peligrosos.	Instrucciones importantes de funcionamiento y/o manteniento	Armadura o chassis	Tierra proteccionista

IMPORTANT SAFETY INSTRUCTIONS

1. Read these instructions.
2. Keep these instructions.
3. Heed all warnings.
4. Follow all instructions.
5. Do not use this loudspeaker near water.
6. Clean only with dry cloth.
7. Do not block any ventilation openings. Install in accordance with Meyer Sound's installation instructions.
8. Do not install near any heat sources such as radiators, heat registers, stoves, or other apparatus that produce heat.
9. Do not defeat the safety purpose of the grounding-type plug. A grounding-type plug has two blades and a third grounding prong. The third prong is provided for your safety. If the provided plug does not fit into your outlet, consult an electrician for replacement of the obsolete outlet.
10. Protect the power cord from being walked on or pinched, particularly at plugs, convenience receptacles, and the point where they exit from the loudspeaker. The AC mains plug or appliance coupler shall remain readily accessible for operation.
11. Only use attachments/accessories specified by Meyer Sound.
12. Use only with the caster rails or rigging specified by Meyer Sound, or sold with the loudspeaker. Handles are for carrying only.
13. Unplug this loudspeaker during lightning storms or when unused for long periods of time.
14. Refer all servicing to qualified service personnel. Servicing is required when the loudspeaker has been damaged in any way, such as when the power-supply cord or plug has been damaged; liquid has been spilled or objects have fallen into the loudspeaker; rain or moisture has entered the loudspeaker; the loudspeaker has been dropped; or when, for undetermined reasons, the loudspeaker does not operate normally.



CAUTION: To reduce the risk of electric shock, do not expose this loudspeaker to rain or moisture. Do not install the loudspeaker in wet or humid locations without using weather protection equipment from Meyer Sound.

SAFETY SUMMARY

English

- To reduce the risk of electric shock, disconnect the loudspeaker from the AC mains before installing audio cable. Reconnect the power cord only after making all signal connections.
- Connect the loudspeaker to a two-pole, three-wire grounding mains receptacle. The receptacle must be connected to a fuse or circuit breaker. Connection to any other type of receptacle poses a shock hazard and may violate local electrical codes.
- Do not install the loudspeaker in wet or humid locations without using weather protection equipment from Meyer Sound.
- Do not allow water or any foreign object to get inside the loudspeaker. Do not put objects containing liquid on or near the unit.
- To reduce the risk of overheating the loudspeaker, avoid exposing it to direct sunlight. Do not install the unit near heat-emitting appliances, such as a room heater or stove.
- This loudspeaker contains potentially hazardous voltages. Do not attempt to disassemble the unit. The unit contains no user-serviceable parts. Repairs should be performed only by factory-trained service personnel.

Français

- Pour réduire le risque d'électrocution, débrancher la prise principale de l'haut-parleur, avant d'installer le câble d'interface allant à l'audio. Ne rebrancher le bloc d'alimentation qu'après avoir effectué toutes les connections.
- Branchez l'haut-parleur dans une prise de courant à 3 dérivations (deux pôles et la terre). Cette prise doit être munie d'une protection adéquate (fusible ou coupe-circuit). Le branchement dans tout autre genre de prise pourrait entraîner un risque d'électrocution et peut constituer une infraction à la réglementation locale concernant les installations électriques.
- Ne pas installer l'haut-parleur dans un endroit où il y a de l'eau ou une humidité excessive.
- Ne pas laisser de l'eau ou tout objet pénétrer dans l'haut-parleur. Ne pas placer de r´cipients contenant un liquide sur cet appareil, ni à proximité de celui-ci.
- Pour éviter une surchauffe de l'haut-parleur, conserver-la à l'abri du soleil. Ne pas installer à proximité d'appareils dégageant de la chaleur tels que radiateurs ou appareils de chauffage.
- Ce haut-parleur contient des circuits haute tension présentant un danger. Ne jamais essayer de le démonter. Il n'y a aucun composant qui puisse être réparé par l'utilisateur. Toutes les réparations doivent être effectuées par du personnel qualifié et agréé par le constructeur.

Deutsch

- Um die Gefahr eines elektrischen Schlages auf ein Minimum zu reduzieren, den Lautsprecher vom Stromnetz trennen, bevor ggf. ein Audio-Schnittstellensign alkabel angeschlossen wird. Das Netzkabel erst nach Herstellung aller Signalverbindungen wieder einstecken.
- Der Lautsprecher an eine geerdete zweipolige Dreiphasen-Netzsteckdose anschließen. Die Steckdose muß mit einem geeigneten Abzweigschutz (Sicherung oder Leistungsschalter) verbunden sein. Der Anschluß der unterbrechungsfreien Stromversorgung an einen anderen Steckdosentyp kann zu Stromschlägen führen und gegen die örtlichen Vorschriften verstoßen.
- Der Lautsprecher nicht an einem Ort aufstellen, an dem sie mit Wasser oder übermäßig hoher Luftfeuchtigkeit in Berührung kommen könnte.
- Darauf achten, daß weder Wasser noch Fremdkörper in das Innere den Lautsprecher eindringen. Keine Objekte, die Flüssigkeit enthalten, auf oder neben die unterbrechungsfreie Stromversorgung stellen.
- Um ein Überhitzen dem Lautsprecher zu verhindern, das Gerät vor direkter Sonneneinstrahlung fernhalten und nicht in der Nähe von wärmeabstrahlenden Haushaltsgeräten (z.B. Heizgerät oder Herd) aufstellen.
- Im Inneren diesem Lautsprecher herr-schen potentiell gefährliche Spannungen. Nicht versuchen, das Gerät zu öffnen. Es enthält keine vom Benutzer reparierbaren Teile. Reparaturen dürfen nur von ausgebildetem Kundenienstpersonal durchgeführt werden.

Español

- Para reducir el riesgo de descarga eléctrica, desconecte de la red de voltaje el altoparlante antes de instalar el cable de señal de audio. Vuelva a conectar la alimentacion de voltaje una vez efectuadas todas las interconexiones de señalizacion de audio.
- Conecte el altoparlante a un tomacorriente bipolar y trifilar con neutro de puesta a tierra. El tomacorriente debe estar conectado a la protección de derivación apropiada (ya sea un fusible o un disyuntor). La conexión a cualquier otro tipo de tomacorriente puede constituir peligro de descarga eléctrica y violar los códigos eléctricos locales.
- No instale el altoparlante en lugares donde haya agua o humedad excesiva.
- No deje que en el altoparlante entre agua ni ningún objeto extraño. No ponga objetos con líquidos encima de la unidad ni cerca de ella.
- Para reducir el riesgo de sobrecalentamiento, no exponga la unidad a los rayos directos del sol ni la instale cerca de artefactos que emiten calor, como estufas o cocinas.
- Este altoparlante contiene niveles de voltaje peligrosos en potencia. No intente desarmar la unidad, pues no contiene piezas que puedan ser repardas por el usuario. Las reparaciones deben efectuarse únicamente por parte del personal de mantenimiento capacitado en la fábrica.

CONTENTS

INTRODUCTION 1

CHAPTER 1: Introducing the MICA™ Loudspeaker 2

Advanced MICA Technology 2
Integrated Amplifier and Processing 2
Truck-Smart and Rig-Ready 3
Total System Approach 4

CHAPTER 2: Power Requirements 5

AC Power 5
Voltage Requirements 5
AC Power Distribution 5
Current Requirements 6
Power Connector Wiring Conventions 7
Electrical Safety Issues 8

CHAPTER 3: Amplification and Audio 9

Audio Input 9
Amplification and Protection Circuitry 10
MICA Interconnections 10
Cabling 10
The TruPower® Limiting System 11
- Low- and Mid-Frequency Limiters 11
- High-Frequency Limiter 11

Fans and Cooling System 12

CHAPTER 4: RMS™ Remote Monitoring System 13

Understanding the User Panel 13
- Service LED (Red) 14
- Service Button 14
- Wink LED (green) 14
- Reset Button 14
- Activity LED (Green) 14

User Interface 14

CHAPTER 5: Line Arrays and System Integration 15

How Line Arrays Work 15
MICA Curvilinear Array 15
- High Frequencies 15
- Mid to Low Frequencies 15
- Adjusting Line Array Coverage 16
- High-Frequency Design Strategies 16
- Low-Frequency Design Strategies 17
- Optimizing the Array 17
  - High-Frequency Equalization Strategies 17
  - Low-Frequency Strategies 17

Using MICA as Sidefill or Downfill with MILO Curvilinear Arrays 18
- Using Meyer Sound Processors to Drive and Optimize the Array 19
- Using Digital Signal Processors 19

Using MICA with Subwoofers 20

Using MICA with the 700-HP Subwoofer 20
Using MICA with the 600-HP Subwoofer 21

CHAPTER 6: System Design and Integration Tools 23

Meyer Sound MAPP Online® 23
SIM® Measurement System 24
Source Independent Measurement Technique 24
Applications 24

CHAPTER 7: QuickFly® Rigging 25

MICA GuideALinks™ 25
The MG-MICA Multipurpose Grid 26
Using the MG-MICA for Ground-Stacking 26
MICA Loudspeaker Pinned Directly to MG-MICA Grid 27
MICA Loudspeaker Pinned Directly to 600-HP Subwoofer 27
600-HP Subwoofer Pinned Directly to MG-MICA Grid 27
The Optional MDTL-MICA Downtilt Link 27
MICA Loudspeaker Pinned to Downtilt Link and MG-MICA Grid 27
MICA Loudspeaker Pinned to Downtilt Link and 600-HP Subwoofer 28
The MTF-MILO/MICA Transition Frame 28
MCF-MICA Caster Frame 28

APPENDIX A: Amplifier Replacement and Optional Rain Hood 31

Removing the MPW-4/MICA Amplifier 31
Replacing the MPW-4/MICA Amplifier 31
Installing the MICA Quick-Clip Rain Hood 31

APPENDIX B: MICA Specifications 33

INTRODUCTION

These operating instructions provide important information about the form, features, function and specifications of the MICA™ compact high-power expanded coverage curvilinear array loudspeaker. In addition to power requirements and audio characteristics, fundamental line array design, useful software tools and rigging options for MICA are discussed.

Chapter 1: Introducing MICA provides a general description of MICA and its capabilities and functionality.

Chapter 2: Power Requirements discusses power distribution, voltage and current requirements, as well as electrical safety issues.

Chapter 3: Amplification and Audio will help you understand and harness the power of the MICA amplifier. Amplifier specifications, connectivity, limiting and cooling system components are all covered.

Chapter 4: RMS™ Remote Monitoring System introduces you to the RMS communication module, which is installed in the MICA's amplifier to make use of Meyer Sound's RMS remote monitoring system.

Chapter 5: Line Arrays and System Integration will walk you through the integration of MICA in mid-high or full-range line array systems.

Chapter 6: System Design and Integration Tools introduces two comprehensive tools, Meyer Sound MAPP Online® and SIM®, for assisting you with the acoustical and functional requirements of system design and optimization.

Chapter 7: QuickFly® Rigging shows the QuickFly rigging components for use with MICA, including the MG-MICA top grid and MCF-MICA caster frame. This is an overview on how to array MICA loudspeakers in flown or ground-stacked configurations.

Appendix A: Amplifier Replacement and Optional Rain Hood discusses the procedure for replacing the MICA amplifier as well as installing the optional MICA rain hood used in weather-protected versions.

Appendix B: Specifications and Dimensional Drawings provides detailed acoustic and electrical specifications for MICA, along with detailed dimensional drawings.

HOW TO USE THIS MANUAL

As you read this manual, you'll find figures and diagrams to help you understand and visualize what you're reading. You'll also find icons that flag important information or warn you against improper or potentially harmful activities. These icons include:



A **NOTE** identifies an important piece of information relating to the topic under discussion.



A **TIP** offers a helpful tip relevant to the topic at hand.



A **CAUTION** gives notice that an action can have serious consequences and could cause harm to equipment or personnel, delays, or other problems.

Information and specifications are applicable as of the date of this printing. Updates and supplementary information are posted on the Meyer Sound website at:

http://www.meyersound.com

You may contact Meyer Sound Technical Support at:

Tel: +1 510 486.1166

Fax: +1 510 486.8356

E-mail: techsupport@meyersound.com

CHAPTER 1: INTRODUCING THE MICA LOUDSPEAKER

The MICA compact high-power curvilinear array loudspeaker is a member of the popular MILO® high-power curvilinear loudspeaker family.

MICA (Figure 1.1) is ideal for creating compact high-power arrays in applications that do not require as much power and throw distance as the larger MILO®, and where its reduced size and weight are advantageous. It is equally applicable in a wide variety of applications such as touring, rental, and fixed installations. Options for MICA include a weather-protected version with a rain hood to safeguard the electronics, and custom color finishes.



Figure 1.1. MICA compact high-power wide coverage curvilinear array loudspeaker

MICA provides an excellent complement to a MILO main system for tours that are playing a variety of venues, being used as sidefills for large arenas and sheds, and as the main system for smaller venues. MICA's extended high-frequency headroom and 100-degree horizontal coverage provides detailed resolution of delicate transient information across a wide coverage pattern. When used as sidefills with MILO main arrays, MICA's acoustical characteristics are designed to facilitate seamless integration.

ADVANCED MICA TECHNOLOGY

Compact and lightweight for a self-contained, self-powered three-way system, MICA produces a wide horizontal coverage angle of 100 degrees and a vertical coverage angle that varies depending on array length and configuration. MICA produces a peak output of 138 dB SPL with exceptionally flat phase and frequency response.

MICA was created specifically as a modular, flexible design solution to provide high-power systems for medium-sized venues, and for large venues as a complement to MILO. The MICA loudspeaker is a three-way design. The MICA low/low-mid section features two high-power, neodymium-magnet 10-inch cone drivers with 2-inch voice coils, especially designed for the power capabilities of the system. The drivers are a proprietary design employing neodymium magnets for higher efficiency and power handling with reduced weight. Both drivers are housed in separate vented enclosures within the loudspeaker, located on the left and right sides. The lowest frequency range is reproduced by these high-power drivers working in tandem, each powered by a dedicated amplifier channel.

To assure the smoothest response in the critical midrange and crossover region, MICA incorporates a complex active crossover design. In the low-mid frequencies, the crossover feeds only one of the two 10-inch drivers while rolling off the other driver. This technique eliminates interference between the drivers that would otherwise occur at shorter wavelengths, while at the same time maintaining optimal polar and frequency response characteristics at the crossover frequencies.

The system's wide operating frequency range (60 Hz to 18 kHz) is complemented by extended high-frequency headroom. MICA's high-frequency section uses two 1.2-inch exit, 3-inch diaphragm compression drivers with neodymium magnets, each also powered by a dedicated amplifier channel. The output of each driver is seamlessly combined through a custom REM™ ribbon emulation manifold for the dual-driver high-frequency section, coupled to a 100-degree horizontal constant-directivity horn. REM is a patented coupling device that introduces driver output to the horn throat across a very short path, effectively controlling the output, but with dramatically reduced distortion in comparison to other techniques.

INTEGRATED AMPLIFIER AND PROCESSING

As a self-powered loudspeaker, MICA incorporates a very high power, 4-channel, class AB/H power amplifier and sophisticated control circuitry housed within the cabinet — dramatically simplifying setup and installation. Supply power distribution to the array, connect line-level signal, and that's it — you're focusing on design implementation instead of installation.

MICA's on-board amplifier delivers 3,020 watts total burst power (6,000 watts peak). TruPower® limiting extends the life of MICA's drivers under severe non-linear circumstances at very high levels, and keeps long-term power compression to less than 1 dB (versus the typical 3 to 6 dB for conventional systems).



Figure 1.2. MPW-4 MICA amplifier

This modular, field-replaceable amplifier/processing package also incorporates Meyer Sound's Intelligent AC™ power supply, which automatically adjusts for any line voltage worldwide and provides both soft turn-on and transient protection. MICA is fitted standard with Meyer Sound's exclusive RMS interface, giving you the capability to monitor and troubleshoot an entire RMS-equipped Meyer Sound system remotely from your PC notebook or desktop system.

NOTE: In order to use RMS, you will need Meyer Sound's optional RMS software, interface card, and a PC running Windows® 98/NT 4.0/2000/XP or higher.

NOTE: Complete acoustical and electrical specifications are covered in Appendix B.

TRUCK-SMART AND RIG-READY

MICA's QuickFly rigging employs rugged, reliable and user-friendly components that remain captive in transit. Custom front and rear GuideALinks™ at the cabinet corners couple the units for flying, stacking or transporting in stacks while still in various splayed positions.

A slot and convenient pinned knob allow each link to be moved and pinned for arraying or storage.

The rear links of the MICA enclosure permit 10 splay angles, for optimum acoustical performance, between 0 and 6 degrees (in 0.5-degree increments from 0 to 3 degrees, and in 1-degree increments from 3 to 6 degrees). The two-position front links with their standard 0° position may be set to the extended position to add 7 degrees to the angles set on the rear link. These extended angles (7 degrees to 13 degrees) can be used to adjust the vertical coverage at higher frequencies — creating a wider angle in the array to miss balcony fronts and other architectural obstacles.

Because rigging connections are rigid, the array tilt is easy to adjust — often eliminating the need for a pull-back strap in flown configurations.

Rigging accessories for MICA include the MG-MICA top grid. This multipurpose grid is designed for flying MICA arrays and can also be used to facilitate ground-stacking.



Figure 1.3. The MG-MICA multipurpose grid can be used both for flying and ground-stacking MICA cabinets

An MTF-MILO/MICA transition grid allows MICA to be configured along with MILO loudspeakers in complex systems.

The MCF-MICA caster frame is designed for transporting stacks of multiple units and facilitate the use of forklifts. A range of rugged protective transport covers is also available.



Figure 1.4. MCF-MICA caster frame supporting four MICA cabinets

MICA is truck-smart: When transporting blocks of up to 4 MICAs using the MCF-MICA caster frame, the dimensions are ideal for both U.S. and European trucks.

TOTAL SYSTEM APPROACH

With compatible acoustical and performance characteristics and dedicated QuickFly rigging hardware, MICA, MILO and other Meyer Sound self-powered loudspeakers can provide you with everything you need to design and implement systems for optimum performance in venues of any size or shape.

TIP: Meyer Sound MAPP Online acoustical prediction software allows you to quickly determine the coverage, frequency response, impulse response and maximum output of arrayed MICA loudspeakers.

In addition, by integrating Meyer Sound subwoofers with a MICA system, you can easily augment bass power with real depth while extending low-frequency bandwidth and headroom.

MICA arrays can be deployed in combination with Meyer Sound 700-HP (Figure 1.5) subwoofers flown in a separate array or ground-stacked. The 700-HP subwoofer extends the system frequency response down to 30 Hz.



Figure 1.5. The 700-HP ultrahigh-power subwoofer

In applications where the 18-inch drivers and features of the 700-HP are not needed or the subwoofers need to be integrated on the same array with MICA, the 600-HP subwoofer (Figure 1.6) is an ideal complement. The 600-HP is a compact high-power dual 15-inch subwoofer that can be arrayed with MICA or ground-stacked when its reduced size and weight are advantageous.



Figure 1.6. The 600-HP high-power subwoofer

NOTE: MICA can also be used in combination with other Meyer Sound subwoofers, such as the 650-P high-power subwoofer.

CHAPTER 2: POWER REQUIREMENTS

Self-powered and highly mobile, MICA combines advanced loudspeaker technology with equally advanced power capabilities. Understanding MICA's power distribution, voltage and current requirements, as well as electrical safety issues, is critical to the safe and correct operation and deployment of MICA loudspeakers.

AC POWER

When AC power is applied to the MICA loudspeaker, the Intelligent AC power supply automatically selects the correct operating voltage, allowing MICA to be used internationally without manually setting voltage switches. The Intelligent AC power supply performs the following protective functions to compensate for hostile conditions on the AC mains:

- Suppresses high-voltage transients up to several kilovolts
- Filters common mode and differential mode radio frequencies (EMI)
- Sustains operation temporarily during low-voltage periods
- Provides soft-start power-up, eliminating high inrush current

VOLTAGE REQUIREMENTS

The MICA loudspeaker operates safely and without audio discontinuity if the AC voltage stays within either of two operating windows at 50 or 60 Hz:

- 85 to 134 volts
- 165 to 264 volts

MICA can withstand continuous voltages up to 275 volts and allows any combination of voltage to GND (that is neutral-line-ground or line-line-ground).

CAUTION: Continuous voltages higher than 275 volts can damage the unit.

TIP: Since MICA does not require a dedicated neutral, it can tolerate elevated voltages from ground and can be connected between line-line terminals in a 120 V 3-phase Wye system. This results in 208 V AC between lines (nominal) and will therefore draw less current for the same output power compared to operating MICA from 120 V AC (line-neutral). Make sure that the voltage remains within MICA's recommend operating window (180 V AC to 250 V AC). The ground terminal must always be used for safety and the line to ground voltage should never exceed 250 V AC (typically there will be 120 V AC from line to ground in the above example).

MICA uses a PowerCon, a NEMA L6-20P, an IEC 309 male power connector, or a multi-pin VEAM connector, and complies with worldwide product safety standards.

AC POWER DISTRIBUTION

All amplifier modules and directly associated audio equipment (mixing consoles, processors, etc.) must be properly connected to the AC power distribution, preserving AC line polarity and connecting earth ground such that all grounding points are connected to a single node or common point using the same cable gauge as the neutral and line(s) cable(s).

Improper grounding connections between loudspeakers and the rest of the audio system may produce noise, hum and/or serious damage to the input/output stages in the system's electronic equipment.

CAUTION: Before applying AC to any Meyer Sound self-powered loudspeaker, be sure that the voltage potential difference between neutral and earth ground is less than 5 V AC.

Figure 2.1 shows a sample three-phase AC distribution system, with the load between loudspeakers distributed among the three phases and all of the loudspeakers connected to common neutral and earth-ground points.

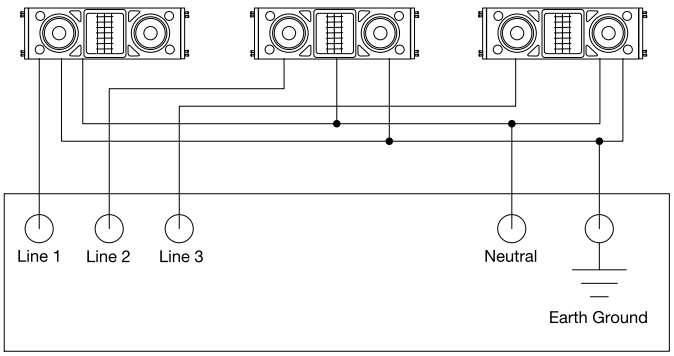

Figure 2.1. A sample AC power distribution block diagram

NOTE: Refer to Appendix B for details on the MICA loudspeaker's AC voltage requirements.

After applying AC power, the proper operating voltage is automatically selected, but the system is muted. During the next three seconds the following events occur:

1. The primary fans turn on.
2. The main power supply slowly ramps on.
3. The green Active LED on the user panel lights up, indicating that the system is enabled and ready to pass audio signals.

CAUTION: If the Active LED does not illuminate or the system does not respond to audio input after ten seconds, remove AC power immediately. Verify that the voltage is within the proper range. If the problem persists, please contact Meyer Sound or an authorized service center.

If voltage drops below the low boundary of either safe operating range (brownout), MICA uses stored energy to continue functioning briefly, and shuts down only if voltage does not rise above the low boundary before MICA's storage circuits are depleted. How long MICA will continue to function during brownout depends on the amount of voltage drop and the audio source level during the drop. If the voltage increases above the upper boundary of either range, the power supply rapidly turns off, preventing damage to the unit.

NOTE: If voltage fluctuates within either operating range, automatic tap selection stabilizes the internal operating voltage. This tap selection is instantaneous, and there are no audible artifacts.

If MICA shuts down due to either low or high voltage, its power supply automatically turns on again after three seconds if the voltage has returned to either normal operating window. If the MICA loudspeaker does not turn back on after 10 seconds, remove AC power immediately (see previous Caution).

NOTE: It is recommended that the supply be operated in the rated voltage windows at least a few volts away from the turn on/off points. This ensures that AC voltage variations from the service entry — or peak voltage drops due to cable runs — do not cause the amplifier to cycle on and off.

CURRENT REQUIREMENTS

The MICA loudspeaker presents a dynamic load to the AC mains, which causes the amount of current to fluctuate between quiet and loud operating levels. Since different cables and circuit breakers heat up at varying rates, it is essential to understand the types of current ratings and how they correspond to circuit breaker and cable specifications.

The *maximum long-term continuous current* is the maximum rms current during a period of at least ten seconds. It is used to calculate the temperature increase in cables, in order to select a cable size and gauge that conforms to electrical code standards. It is also used to select the rating for slow-reacting thermal breakers.

The *burst current* is the maximum rms current during a period of approximately one second, used to select the rating of most magnetic breakers and to calculate the peak voltage drop in long AC cables according to the formula:

V pk (drop) = I pk x R (cable total)

The *ultimate short-term peak current* is used to select the rating of fast-reacting magnetic breakers.

Use Table 2.1 below as a guide when selecting cable gauge size and circuit breaker ratings for your operating voltage.

Table 2.1: MICA Current Ratings

Current Draw	115 V AC	230 V AC	100 V AC
Idle current	1.1 A rms	0.55 A rms	1.3 A rms
Max. long-term continuous	5.4 A rms	2.7 A rms	6.2 A rms
Burst current	8.7 A rms	4.3 A rms	10.0 A rms
Ultimate short-term peak	24.6 A pk	12.3 A pk	28.3 A pk

NOTE: For best performance, the AC cable voltage drop should not exceed 10 volts, or 10 percent at 115 volts and 5 percent at 230 volts. Make sure that even with the AC voltage drop the AC voltage always stays in the operating windows.

The minimum electrical service amperage required by a MICA system is the sum of each loudspeaker's *maximum long-term continuous current*. An additional 30 percent above the minimum amperage is recommended to prevent peak voltage drops at the service entry.

CAUTION: In the unlikely event that the circuit breakers on MICA's user panel trip (the white center buttons pop out), disconnect the AC power cable. Do not reset the breakers with the AC connected. Contact Meyer Sound for repair information.

POWER CONNECTOR WIRING CONVENTIONS

The MICA loudspeaker requires a grounded outlet. It is very important that the system be properly grounded in order to operate safely and properly. Figures 2.2, 2.3, 2.4 and 2.5 illustrate correct wiring for the creation of power cables and distribution systems.

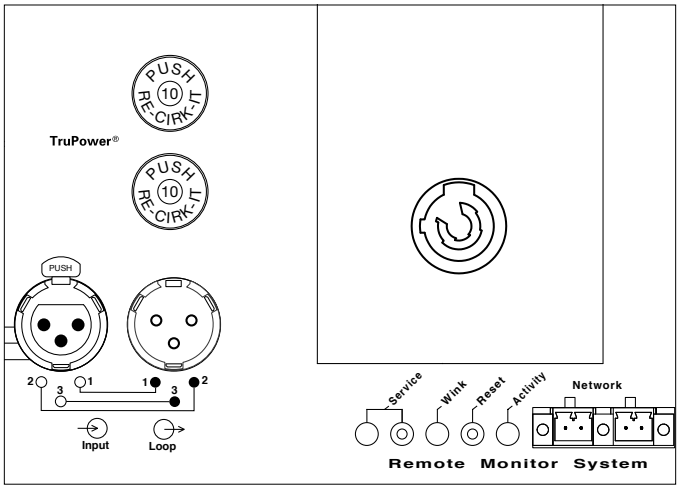

Figure 2.2. MICA rear user panel with PowerCon connector

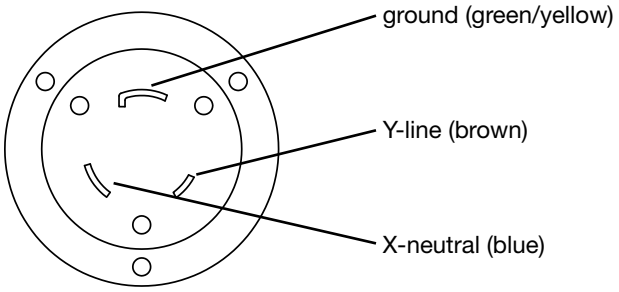

Figure 2.3. L6-20 power connector pin-out

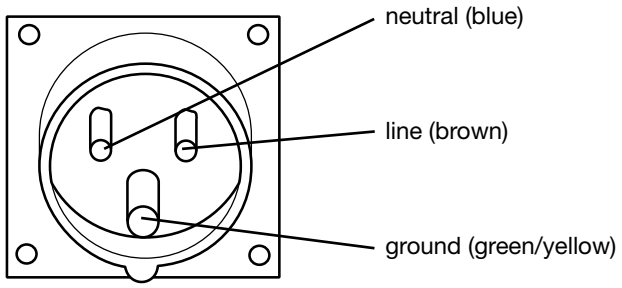

Figure 2.4. IEC 309 power connector pin-out

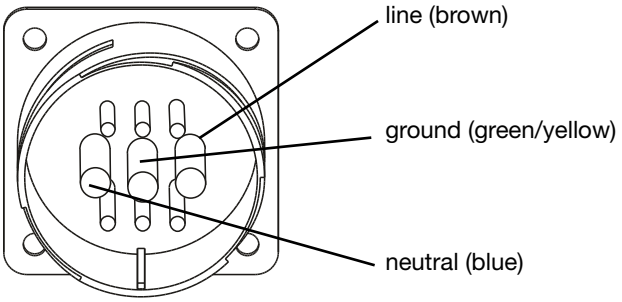

Figure 2.5. VEAM multi-pin connector power pin-out

If the loudspeaker is fitted with the VEAM multipin connector, see the Meyer Sound document VEAM Cable Wiring Reference (PN 06.033.113) for wiring conventions and pin-outs for AC, audio, and RMS connections.

Meyer Sound offers the VIM-4 (VEAM interface module) to distribute power, audio and RMS to MICA loudspeakers fitted with 4 VEAM connectors in the front and a single-phase IEC 309 32-amp connector in the rear, as shown below in Figure 2.6.

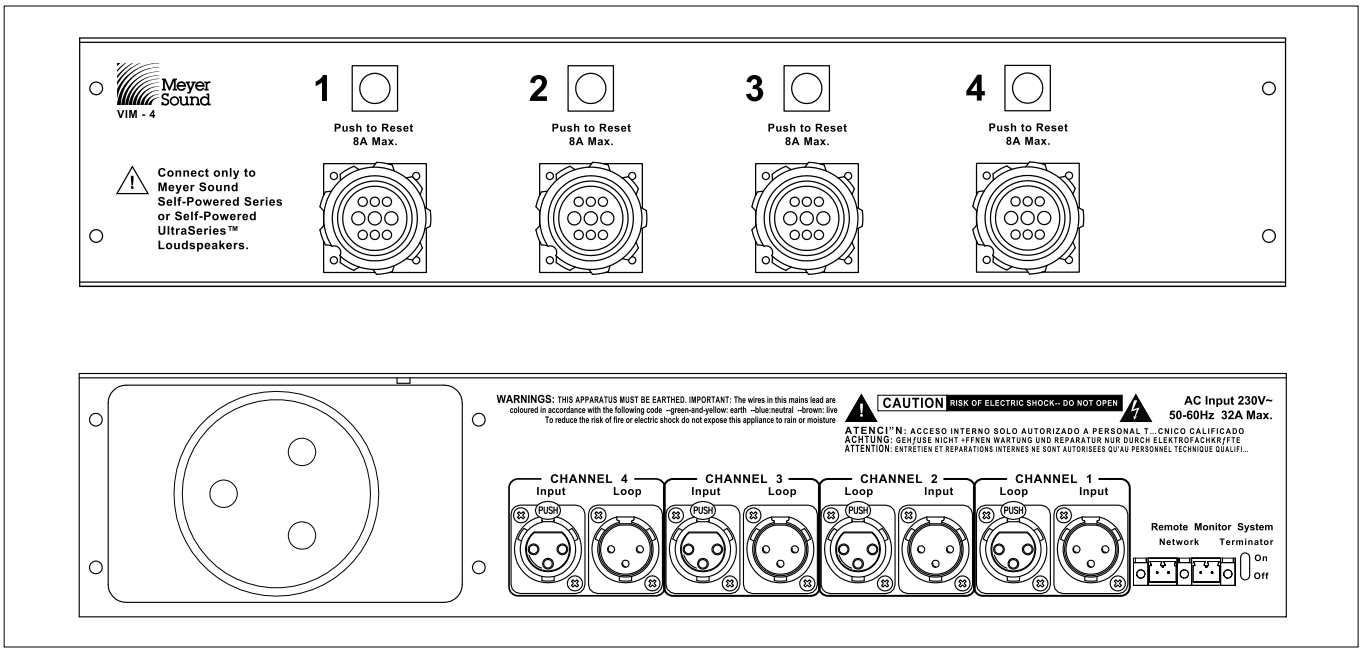

Figure 2.6. VIM-4 module, front (top) and rear (bottom)

Use the AC cable wiring diagram below (Figure 2.7) to create international or special-purpose power connectors:

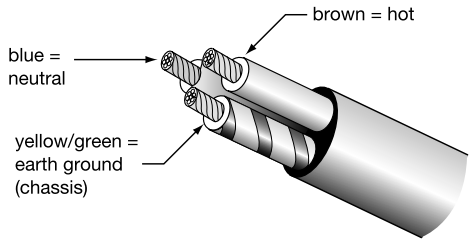

Figure 2.7. AC cable color code

If the colors referred to in the diagrams don't correspond to the terminals in your plug, use the following guidelines:

- Connect the blue wire to the terminal marked with an N or colored black.
- Connect the brown wire to the terminal marked with an L or colored red.
- Connect the green and yellow wire to the terminal marked with an E or colored green or green and yellow.

ELECTRICAL SAFETY ISSUES

Pay close attention to these important electrical and safety issues.

CAUTION: The MICA loudspeaker requires a ground connection. Always use a grounded outlet and plug.

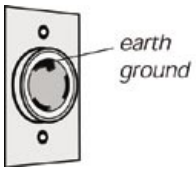

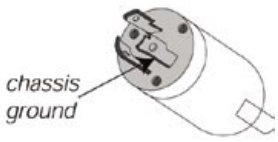

TIP: Use the ring located on the rear of MICA's cabinet (to the right of the amplifier) to provide strain relief for power and signal cables. Do not use this ring for any other purpose.

CHAPTER 3: AMPLIFICATION AND AUDIO

More than just a self-powered loudspeaker, MICA uses sophisticated amplification and protection circuitry and an advanced limiting system to produce consistent and predictable results in any system design. This chapter will help you understand and harness the power of MICA's amplifier and audio systems.

AUDIO INPUT

The MICA loudspeaker presents a 10 kOhm balanced input impedance to a three-pin XLR connector with the following connections:

- Pin 1 — 220 kOhm to chassis and earth ground (ESD and RF clamped)
- Pin 2 — Signal (+)
- Pin 3 — Signal (-)
- Case — Earth (AC) ground and chassis

CAUTION: Shorting an input connector pin to the case can form a ground loop and cause hum.

Pins 2 and 3 carry the input as a differential signal; pin 2 is hot relative to pin 3, resulting in a positive pressure wave when a positive signal is applied to pin 2. Pin 1 is connected to earth through a 220 kOhm, 1000 pF, 15 V clamp network. This ingenious circuit provides virtual ground lift at audio frequencies, while allowing unwanted signals to bleed to ground. Use standard audio cables with XLR connectors for balanced signal sources. Make sure that pin 1 (shield) is always connected on both ends of the cable. Telescoping grounding schemes are not recommended.

CAUTION: Ensure that all cabling carrying signal to MICA loudspeakers in an array is wired correctly: Pin 1 to Pin 1, Pin 2 to Pin 2, and so forth, to prevent the polarity from being reversed. Any number of MICA loudspeakers (even one) in the array with reversed polarity will result in severe degradation in frequency response and coverage.

TIP: If abnormal noises such as hissing and popping are produced by the loudspeaker, disconnect the audio cable from the loudspeaker. If the noise stops, most likely the problem is not with the loudspeaker. Check the audio cable, source and AC power to pinpoint the problem.

Audio signals can be daisy-chained using the loop output connector on the user panel of the MICA loudspeaker (Figure 3.1). A single source can drive multiple MICA loudspeakers with a paralleled input loop, creating an unbuffered hard-wired loop connection.

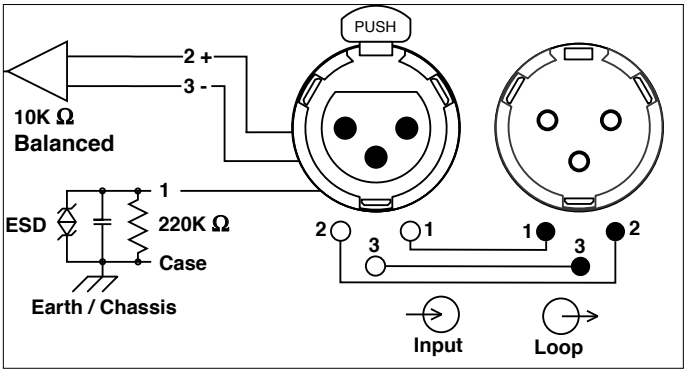

Figure 3.1. MICA's rear panel audio input connectors

When driving multiple MICA loudspeakers in an array, make certain that the source device can drive the total load impedance presented by the paralleled input circuit of the array. The source device must be capable of producing a minimum of 20 dBV (10 volts rms into 600 ohms) in order to produce the maximum peak SPL over the operating bandwidth of the loudspeaker.

To avoid distortion, make sure the source device provides an adequate drive circuit design for the total paralleled load impedance presented by the array. The input impedance for a single MICA loudspeaker is 10 kOhms: if *n* represents the number of MICA loudspeakers in an array, paralleling the inputs of *n* MICA loudspeakers will produce a balanced input load of 10 kOhms divided by *n*.

NOTE: Most source devices are safe for driving loads no smaller than 10 times the source's output impedance.

For example, cascading an array of 10 units consisting of MICA loudspeakers produces an input impedance of 1,000 ohms (10 kOhms divided by 10). The source device should have an output impedance of 100 ohms or less. This is also true when connecting MICA loudspeakers in parallel (loop out) with other self-powered Meyer Sound loudspeakers, for example MILO, 700-HP, 600-HP or 650-P.

NOTE: Meyer Sound's Galileo™ loudspeaker management system and LD-3 compensating line driver are highly recommended when driving systems using multiple loudspeakers. These processors, in addition to maintaining signal integrity for long cable paths, offer independent outputs and filters to help you integrate sub-systems and optimize MICA array performance.

NOTE: For details on MICA's audio input characteristics and amplification, see Appendix B.

AMPLIFICATION AND PROTECTION CIRCUITRY

MICA is powered by the Meyer Sound MPW-4/MICA amplifier, a high-power four-channel amplifier with a total power of 3,020 watts (6,000 watts peak). The MPW-4/MICA amplifier utilizes complementary-power MOSFET output stages (class AB/H). All the specific functions for the MICA loudspeaker such as crossover points, frequency and phase response, and driver protection are determined by the control card installed inside the MPW-4/MICA amplifier.

NOTE: For details on replacing the MPW-4/MICA amplifier see Appendix A.

CAUTION: Please note that MICA and other Meyer Sound loudspeaker amplifiers are different. Specific functions for each model, such as crossover points, frequency and phase correction and driver protection are determined by the control cards installed inside the amplifier. Do not exchange amplifiers between MICA and other Meyer Sound loudspeakers.

MICA INTERCONNECTIONS

The two 4-ohm, 10-inch, low-frequency cone drivers are each powered with 950 watts from two channels of the four-channel MPW-4/MICA amplifier. The two 3-inch diaphragm, 8-ohm high-frequency compression drivers are each powered with 560 watts from the other two channels. Figure 3.2 shows how MICA's drivers are connected to the amplifier.

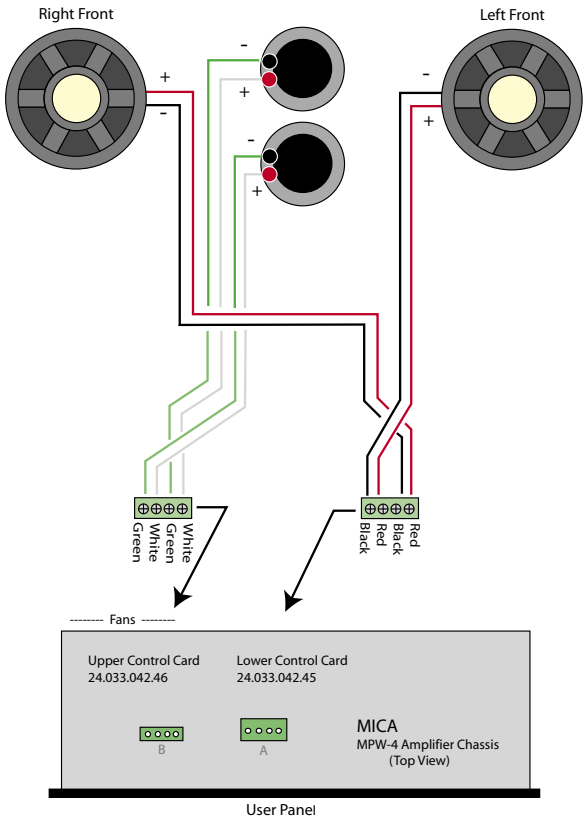

Figure 3.2. MICA internal wiring harness diagram

All Meyer Sound loudspeakers are tested and shipped with the drivers in correct alignment. However, if a driver needs to be replaced, make sure the replacement is reinstalled with the correct polarity.

CAUTION: Failure to connect a replacement driver using the proper polarity will result in severe degradation in frequency and phase response and can harm the drivers and amplifier.

CABLING

MICA is available with two different cabling/connection options. One is the Meyer Sound/VEAM cable system, which combines AC power, audio signal, and RMS network data into one heavy-duty cable with a single matching connector per MICA cabinet.

The other (standard) system uses three separate cables and connectors per cabinet for the AC line current, signal, and RMS data. However, the three can be consolidated to create a "multi-cable" by looming them together for quick connection to each cabinet. This ensures no patching errors and a minimum of discrete cables behind the array.

A ring/stud fitting is provided on the rear of the MICA loudspeaker to act as a strain relief for cabling. Using this fitting will minimize the chance of cables being damaged during installation.

To utilize the strain relief fitting, insert the signal, data, and AC connections into each loudspeaker as the array is being rigged (swag all cables under the rain hood's sides if installed), and tie the cables off to the ring/stud fitting, as shown in Figure 3.3.

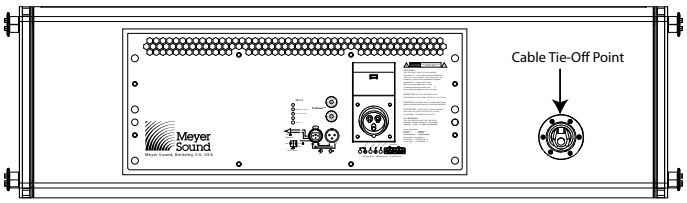

Figure 3.3. Cables are easily tied off using the rear ring/stud fitting.

CAUTION: The strain relief ring and stud fitting must be used only to secure system cabling. This fitting is not intended to be used with system rigging or a pull-back motor (pulling the bottom of the array backward to increase downward tilt). The strain relief fitting is mounted to the side of the amplifier area so as not to interfere with the rain hood (if fitted) and the amplifier fan exhaust area.

THE TRUPOWER LIMITING SYSTEM

Conventional limiters assume a constant loudspeaker impedance and therefore set the limiting threshold by measuring voltage only. However, this method is inaccurate because the loudspeaker's impedance varies throughout its frequency range, changing in response to the frequency content of the audio source. In addition, the impedance also changes due to temperature variations in the voice coil and magnet. Consequently, conventional limiters begin limiting prematurely, which under-utilizes system headroom and lessens the loudspeaker's dynamic range.

In contrast, TruPower limiting (TPL) accounts for varying loudspeaker impedance by measuring current as well as voltage to compute the actual power dissipation in the voice coil. TPL improves performance before and during limiting by allowing each driver to produce maximum SPL across its entire frequency range.

NOTE: TPL only reduces the signal level to keep the voice coil below its maximum operating temperature, hence the peaks are unaffected.

In addition, TPL eliminates power compression when the system is operated at high levels for extended periods, and also extends the driver life cycle by controlling voice coil temperatures.

The actual power is monitored for all four of MICA's amplifier channels. When the safe continuous power level is exceeded, the TPL limiter controlling that amplifier channel engages. TPL activity is indicated by the LEDs on the user panel (Figure 3.4).

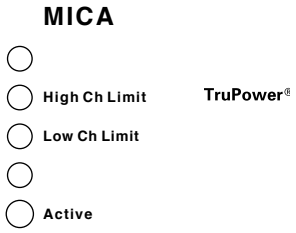

Figure 3.4. MICA Limit LEDs

Low- and Mid-Frequency Limiters

MICA's left and right 10-inch cone drivers are powered by separate amplifier channels, each with a power detector but routed to one limiter; the limiter tracks both channels and uses the higher of the two values to engage. By limiting both amplifier channels equally, any anomalies in the frequency range shared by the drivers are eliminated during limiting. The Low Ch Limit LED on the user panel indicates TPL activity for these two drivers. When the power level and voltage for both low channels returns to normal — below the limiter's threshold — the limiter will cease operation.

High-Frequency Limiter

The two 3-inch diaphragm high-frequency compression drivers are also powered by two amplifier channels receiving identical audio signals; these channels have both TPL and peak limiters. The limiter tracks both channels and uses the higher of the two values to engage. By limiting both amplifier channels equally, any anomalies in the frequency range shared by the drivers are eliminated during limiting.

The High Ch Limit LED is used to indicate any limiting activity for these drivers. When the LED turns on and off in rapid succession, it indicates peak limiting; when it turns on and off slowly, it indicates TPL activity. When engaged, the peak limiter prevents signal peaks from causing excessive distortion in the amplifier channel, preserving headroom and maintaining smooth frequency response at high levels. When the power level and voltage for both high channels returns to normal — below the limiter's threshold — the limiter will cease operation.

NOTE: The limiting circuitry utilizes optical limiters that add no noise and have no effect on the signal when the limiter is not engaged and the LED is inactive.

MICA is performing within its acoustical specifications and operating at a normal temperature if the limit LEDs are lit for no longer than two seconds, and then go off for at least one second. If an LED remains on for longer than three seconds, that channel enters **hard limiting**, with the following negative consequences:

- Increasing input level will not increase volume.
- Distortion increases due to clipping and nonlinear driver operation.
- The lifespan of the driver is reduced because it is subjected to excessive heat and/or excursion, and eventual damage.

NOTE: The limit LEDs indicate when the safe power level is exceeded. If any channel on an entire system of MICA loudspeakers begins to limit before reaching the required sound pressure level (SPL), consider adding more loudspeakers to satisfy the SPL requirements without exposing the drivers on that channel to excessive heat and/or excursion.

FANS AND COOLING SYSTEM

MICA uses a forced-air cooling system with four fans (two primary and two secondary) to prevent the amplifier modules from overheating. The fans draw air in through ducts on the front of the cabinet, over the heatsinks, and out the rear of the cabinet. Because dust does not accumulate in the amplifier circuitry, its lifespan is increased significantly. The front grille surface acts as an air filter for the cooling system and should always be in place during operation (Figure 3.5).

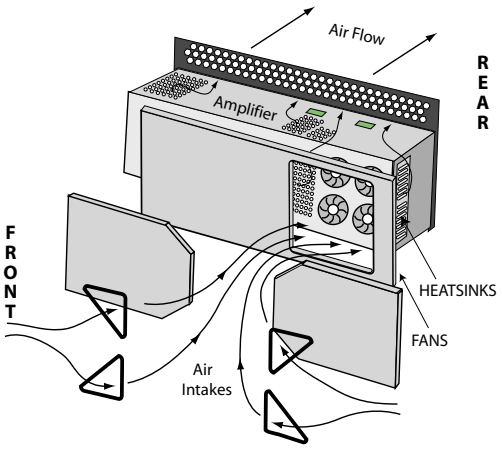

Figure 3.5. Airflow through MICA

Because the grille acts as a filter, it should be inspected and cleaned routinely — once every six months, or once every three months in a dusty environment — to assure proper airflow and cooling. The grille can be vacuumed to remove dust.

TIP: If your MICA loudspeaker is weather-protected, the grille must be removed in order to the clean the additional foam underneath the grille, which covers the air inlets.

Two variable-speed primary fans run continuously and inaudibly at their slowest speed. The primary fans increase speed when either of the two heatsinks reaches 42° C. The fans reach full speed at 62° C and are still barely audible even near the cabinet, and without an audio signal. In the unusual event that the heatsink temperature reaches 74° C, the secondary fans turn on and are clearly audible without an audio signal. The secondary fans turn on in response to:

- Primary fan failure (check status immediately)
- High source levels for a prolonged period
- Accumulation of dust along the cooling path

The secondary fans turn off when the temperature decreases to 68° C.

NOTE: In the highly unlikely event that the secondary fans do not keep the temperature below 85° C, the MICA loudspeaker automatically shuts down until AC power is removed and reapplied. If the MICA loudspeaker shuts down again after cooling and reapplying AC power, contact Meyer Sound for repair information.

Despite MICA's filtering, extensive use or a dusty operating environment can allow dust to accumulate along the path of the airflow, preventing normal cooling. To avoid this, you should periodically remove the grille frame and amplifier module and use compressed air to clear dust from the grille, fans and heatsinks. Make sure that the air ducts are clear.

TIP: For weather-protected MICA loudspeakers, the inside foam should also be cleaned with compressed air.

CAUTION: Be sure to unplug power to the unit before cleaning the amplifier.

CHAPTER 4: RMS REMOTE MONITORING SYSTEM

MICA is RMS-ready and fitted standard with an RMS communication board installed in its MPW-4/MICA amplifier. RMS is a real-time monitoring system that connects Meyer Sound self-powered loudspeakers with a Windows-based PC at the sound mix position or other location. Optional RMS software delivers extensive status and system performance data from every installed loudspeaker.

RMS allows the monitoring of amplifier voltages, limiting activity, power output, temperature, fan and driver status, warning alerts, and other key data for up to 62 loudspeakers without a network repeater. Data is updated two to five times per second.

NOTE: Optional loudspeaker Mute and Solo functions are helpful for acoustic setup or troubleshooting. A jumper must be installed in the RMS communication board inside MICA's amplifier in order to enable Mute and/or Solo functionality; the software also needs to be enabled for these functions.

NOTE: MICA is shipped with these functions disabled. Once enabled, the jumper(s) can still be removed to eliminate any chance of an operator error (a muting error, for example) during a performance, and both functions can be controlled by software commands in any case. Also note that RMS does not control loudspeaker volume or AC power.

Loudspeakers are identified on the network by Node Names assigned during a one-time "commission" into the RMS database that resides on your computer (as a part of the software) as shown in Figure 4.1. This information is permanently retained on each RMS communication board and in the computer RMS database unless you modify it. Loudspeaker View labels can be modified at any time, allowing you to customize how you view the data. In addition, any MICA can be physically identified from RMS software by activating the Wink function — a Wink LED will turn on the RMS communication board that corresponds to its Node Name.

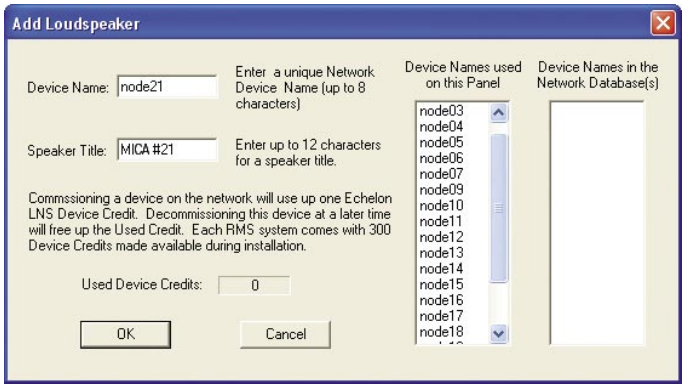

Figure 4.1. Commissioning a MICA loudspeaker using RMS.

MICA loudspeakers are identified using the RMS software by activating the "service" function; an icon will show up on the RMS screen corresponding to its Node Name (Figure 4.2). This makes verifying Loudspeaker View titles and Loudspeaker Field labels easy, using the Wink or Service Button commands.



Figure 4.2. MICA RMS icon

UNDERSTANDING THE USER PANEL

MICA's MPW-4/MICA amplifier contains an RMS user panel, as shown in Figure 4.3.

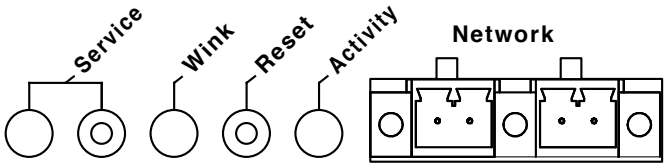

Figure 4.3. The RMS user panel

The RMS user panel has three LEDs and two buttons. The following sections describe their functions.

NOTE: The LEDs and buttons on the user panel of the RMS communication board shown in Figure 4.3 are used **exclusively** by RMS, and have no effect on the acoustical and/or electrical activity of the MICA loudspeaker itself — unless MUTE or SOLO is enabled at the board and from the RMS software.

Service LED (Red)

The Service LED blinks every two seconds to indicate that the network hardware is operational, but the loudspeaker is not installed (commissioned) on the network.

NOTE: The Service LED indicates that the loudspeaker is not commissioned on the network and has no effect on the acoustical and/or electrical activity of the MICA loudspeaker itself. The loudspeaker must be commissioned on a network for the service LED to stop blinking.

When a loudspeaker has been installed on the network, the Service LED will be unlit and the Activity LED will flash continuously.

NOTE: When continuously lit, the Service LED indicates that the loudspeaker has had a local RMS hardware failure. In this case, the RMS communication board may be damaged and you should contact Meyer Sound Technical support.

Service Button

Pressing the Service Button will display an icon on the corresponding loudspeaker display on the RMS screen. When used in combination with the Reset Button, the card will be decommissioned from the network and the red Service LED will blink.

Wink LED (green)

When lit, the Wink LED indicates that an ID signal has been sent from the host station computer to the loudspeaker. This is accomplished using the Wink button on the loudspeaker Icon, Meter or Text views in the RMS monitoring program.

Reset Button

Pressing the Reset Button will cause the firmware code within the RMS card to reboot. However, the commissioning state of the card will not change (this is stored in flash memory). When used in combination with the Service Button, the card will be decommissioned from the network and the red Service LED will blink.

Activity LED (Green)

When the loudspeaker has been commissioned the Activity LED will flash continuously. When the Activity LED is unlit the loudspeaker has not been installed on the network.

USER INTERFACE

The RMS software features an intuitive, graphical Windows user interface. As mentioned earlier, each loudspeaker appears on the computer's color monitor as a View in the form of a status icon, bar graph meter, or text meter (numerical values), depending on your preferences.

Each View contains loudspeaker identification information and data from the amplifier, controller, drivers and power supply of that particular unit. System status conditions cause changes in icon and bar graph indicators, alerting the operator to faults or excessive levels. The views are moveable and are typically arranged on the screen to reflect the physical layout of the loudspeakers. You can design a screen "panel" of icons or meters, as shown in Figure 4.4, and save it on the computer's hard disk, with the panel conveniently named for a unique arrangement or performer.

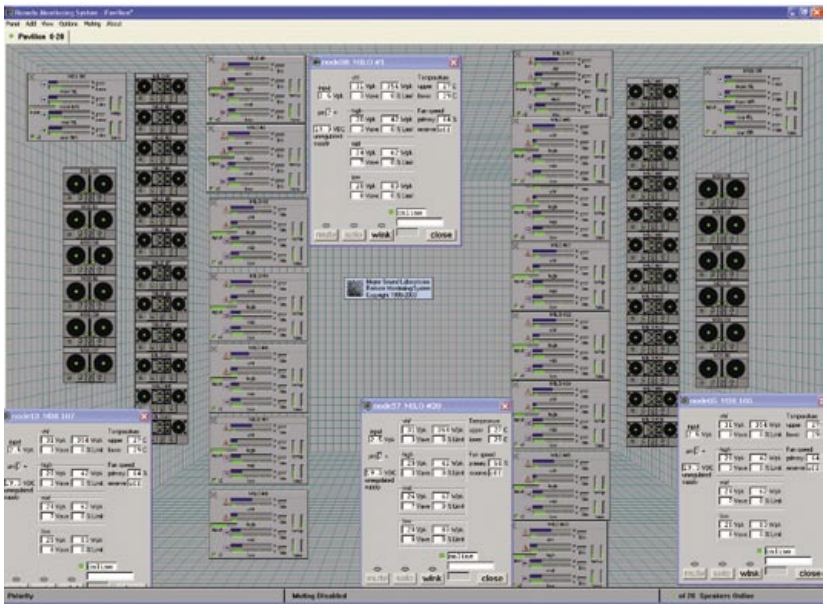

Figure 4.4. The RMS user interface

If the loudspeaker installation pattern changes completely, a new screen panel can be built. If a different subset of already installed loudspeakers will be used for a subsequent show, only selected loudspeakers need to appear on the monitoring screen for that performance.

NOTE: For more information on RMS, please refer to the RMS User Guide included with the software, or visit www.meyersound.com.

CHAPTER 5: LINE ARRAYS AND SYSTEM INTEGRATION

A line array, in the most basic sense, is a group of closely spaced loudspeakers arrayed in a straight line, operating with equal amplitude and in phase. Although line arrays have been used since the 1950s, line array systems that provide full bandwidth directivity are relatively new to the sound reinforcement industry.

HOW LINE ARRAYS WORK

Line arrays achieve directivity through constructive and destructive interference. For example, consider one loudspeaker with a single 12-inch cone radiator in an enclosure. The loudspeaker's directivity varies with frequency: When the wavelengths being reproduced are larger than the driver at low frequencies it is omnidirectional; as the frequency increases (and the wavelength is comparable to the size of the driver), directivity narrows. Above about 2 kHz, it becomes too beamy for most applications, which is why practical system designs employ crossovers and multiple elements to achieve controlled directivity across the audio band.

Stacking two of these loudspeakers one atop the other and driving both with the same signal results in a different radiation pattern. At common points on-axis, there is constructive interference, and sound pressure increases by 6 dB relative to a single unit. At other points off-axis, path length differences produce cancellation, resulting in a lower sound pressure level. In fact, if you drive both units with a sine wave, there will be points where the cancellation is complete, which can be shown in an anechoic chamber. This is destructive interference, sometimes referred to as combing.

A typical line array comprises a line of loudspeakers carefully spaced so that constructive interference occurs on-axis of the array, and destructive interference (combing) is aimed to the sides. While combing has traditionally been considered undesirable, line arrays use combing to positive effect: to control the directivity.

MICA CURVILINEAR ARRAY

The MICA loudspeaker employs a unique combination of drivers to enable you to optimize both coverage and directivity in a MICA line array system. To achieve optimal results, it's important to understand how these components work together.

High Frequencies

For high frequencies, MICA uses very precise Constant Q horns — developed using Meyer Sound's anechoic chamber — which provide a consistent beamwidth of coverage in both the vertical and horizontal planes.

In the horizontal pattern of the array, these horns work to produce a wide 100-degree coverage for MICA; in the vertical, however, Meyer Sound's REM technology provides narrow coverage in order to:

- Minimize destructive interference between adjacent elements
- Promote coupling to throw longer distances

As more elements are arrayed in a vertical column, they project mid- and high-frequency energy more effectively through coupling. The amount of energy can then be controlled using the relative splay between the elements. Curving a line array can aid in covering a broader vertical area, while narrow angles provide a longer throw and coverage which more closely matches that of the mid-low frequencies.

Mid to Low Frequencies

For the mid to low frequencies, line arrays must be coupled together to narrow their vertical coverage and project mid and low energy to the far field. The directional control of the array is achieved when the length of the array is similar or larger than the wavelength of the frequencies being reproduced by the array. As frequencies get lower and wavelengths get longer, the number of cabinets has a critical effect but the splay angle between cabinets has little effect since the total length is not modified substantially. The number of array elements, however, is important: the more MICA loudspeakers used, the more directional the vertical beamwidth becomes at the lower frequencies.

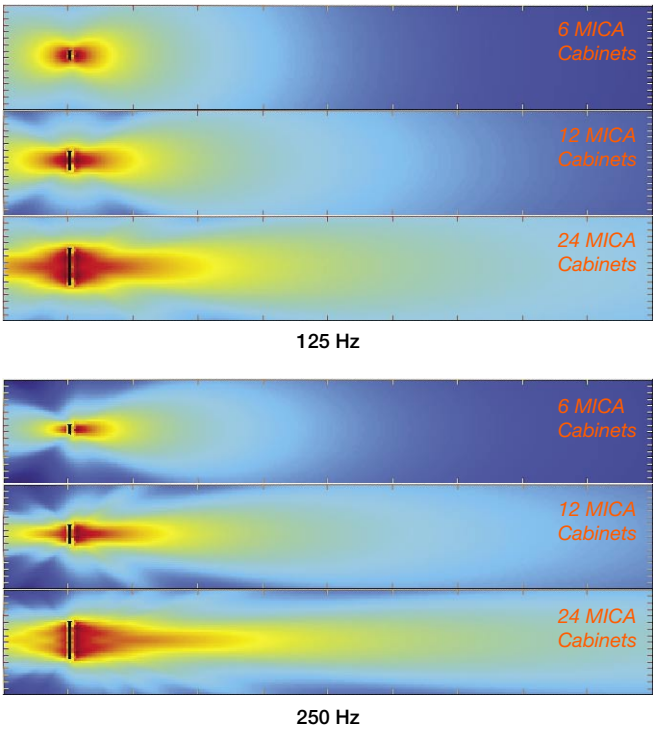

Figure 5.1. MAPP Online predictions of 6-, 12-, and 24-cabinet MICA line arrays at 125 Hz (top) and 250 Hz

Adjusting Line Array Coverage

Regardless of the needs of your system design, fine-tuning coverage for a MICA array is dependent on three factors:

- **Number of Array Elements**. Determining the number of elements to use is critical: The number of elements drastically affects the SPL available from the system as well as the uniformity of coverage in both SPL and frequency response. The number of elements profoundly effects the directivity at lower frequencies.
- **Vertical Splay Angles**. Changing the splay angles between cabinets has a significant impact on vertical coverage for the high frequencies, with the result that narrower vertical splay angles produce a higher Q vertical beamwidth, while wider splay lowers the Q at high frequencies. In general, the splay angles do not affect the vertical coverage at lower frequencies.
- **Horizontal Coverage**. Horizontal coverage for a single MICA array can be considered constant regardless of the number of array elements or the angles between them.

TIP: The angle between two or more line arrays in the horizontal plane can also be changed to meet additional design requirements (for example, wall reflections).

Given these factors, designing and deploying a line array system will typically have the following objectives:

- Even horizontal and vertical coverage
- Uniform SPL
- Uniform frequency response
- Sufficient SPL for the application

With two different technologies (low-frequency cone radiators and high-frequency wave guide) built into each MICA cabinet, achieving these goals becomes a multi-step process, with different strategies for the lower and higher frequencies for long throws and short throws.

NOTE: MAPP Online, covered later in this manual, is the tool of choice to enable you to make accurate and comprehensive predictions for optimal coverage(s) during the design phase.

High-Frequency Design Strategies

Planning for high-frequency coverage is a matter of deciding the number of elements and fine-tuning the splay angles between cabinets. The number of elements does not necessarily have a significant impact on SPL at high frequencies (it will at low frequencies), but can profoundly affect vertical coverage and throw capabilities of the array.

For the far field, a smaller mechanical splay angle between cabinets achieves superior throw through better coupling to compensate for energy lost over distance. The longer the throw needed, the more elements needed with smaller angles at the top of the array.

In the near- to mid-field, larger splay angles are used to increase vertical coverage.

NOTE: Optimal acoustical performance for MICA is achieved by using angles between 0 and 6 degrees in a MICA array; use extended angles (7 to 13 degrees) with caution and only if necessary.

Low-Frequency Design Strategies

While wave-guides provide isolated control over various mid- to high-frequency coverage areas, the low-frequency section of a MICA array still requires mutual coupling — with equal amplitude and phase — to achieve better directionality.

Low-frequency directionality is less dependent on the array's relative splay angles and more dependent on the number of elements of the array. At low frequencies, the more elements in the array (the longer the array), the more directional the array becomes, providing more SPL in this range. The directional control of the array is achieved when the length of the array is similar or larger than the wavelength of the frequencies being reproduced by the array.

Optimizing the Array

Once the design (number and type of elements, vertical splay angles and horizontal splay angles between arrays) has been designed using MAPP, you can effectively optimize the array by driving it with multiple equalization channels, or zones. Typically arrays are divided in two or three zones depending the design and size of the array.

To optimize and EQ the array, different strategies are used for high frequencies (long throws and short throws) and low frequencies.

High-Frequency Equalization Strategies

For the far field, air absorption plays a critical role. The longer the distance, the greater the attenuation at high frequencies. In this zone, high frequencies generally need a correction to compensate for energy lost over distance; the correction needed is usually proportional to the distance and high-frequency air absorption.

In the near- to mid-field, the air absorption is not nearly as critical; in this zone, high frequencies need little or no additional correction.

TIP: If your MICA line array uses a third zone for short throws, high frequencies there may need to be attenuated to more appropriate near-field levels.

Low-Frequency Strategies

Although the array can (and usually should) be zoned for implementing different equalization curves for high frequencies, **similar or identical** equalization should be maintained in **all** the low-frequency filters. Different low-frequency equalization settings in the same array will degrade the desired coupling effect.

For the same reason, severe gain tapering is not recommended for line arrays, since adjusting various zones with an overall amplitude control for each results in the following:

1. The length of the line array column is effectively shortened
2. Directionality decreases at low frequencies.
3. Low-frequency headroom decreases.

Figure 5.2 shows a series of MAPP Online predictions based on an example MICA system design. In this case, small vertical splay angles on the upper part of the array are used to cover longer distances, while greater angles in the lower elements to increase vertical coverage for shorter distances.

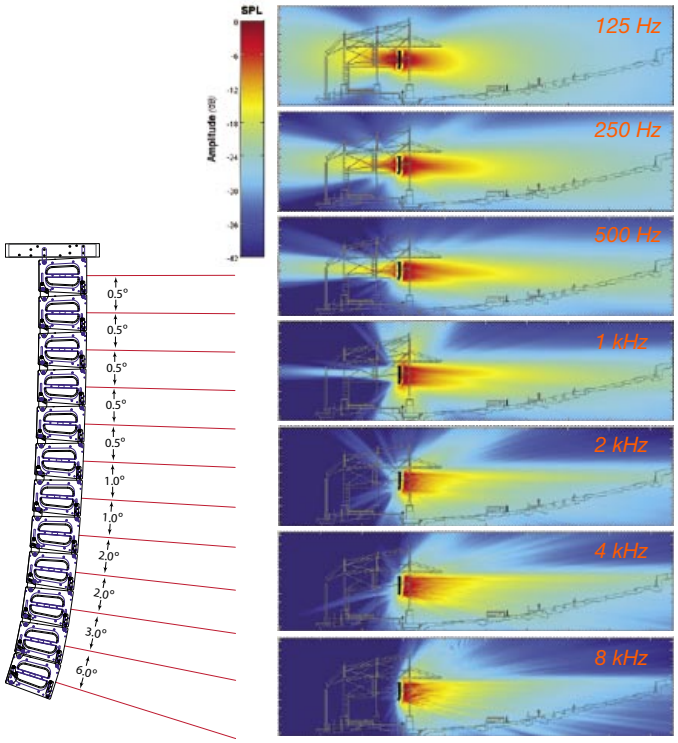

Figure 5.2. MAPP Online plots (right) illustrate the vertical directivity characteristics of the array (left), with a section view of the venue superimposed.

The block diagram (Figure 5.3) shows one method of driving this example array, along with subwoofers (not in the MAPP Online predictions).

Equalizers for each zone, as well as digital delays, provide a time adjustment to compensate for the various sub-systems if they are geometrically out of plane.

> **CAUTION:** This example is not meant to be used as a template for your own system designs. Acoustical characteristics, physical constraints, audio content, audience, and other relevant factors should always be uniquely weighed into your own applications on a per-project basis.

USING MICA AS SIDEFILL OR DOWNFILL WITH MILO CURVILINEAR ARRAYS

MICA's acoustical characteristics promote seamless integration with MILO when used as downfill in MILO curvilinear arrays (via the MTF-MILO/MICA transition grid), as well as when MICA arrays are being used as sidefills along with MILO main arrays. Understanding the differences and similarities between the two loudspeakers is very important for designing and for fine-tuning system coverage.

For a combined MILO/MICA array the design will be dependent on three factors:

- **Number and Type of Array Elements**. Determining the number of elements of each type to use is critical: The number of elements drastically affects the uniformity of coverage of both SPL and frequency response. The number of long-throw elements (MILO) and downfill (MICA) needs to be carefully selected.
- **Vertical Splay Angles**. Changing the splay angles between cabinets has a significant impact on vertical coverage, with the result that narrower vertical splay angles produce a higher Q vertical beamwidth and longer throw in the top elements (MILO), while wider splay lowers the Q at high frequencies for coverage on the lower elements (MICA).
- **Horizontal Coverage**. Horizontal coverage needs to be divided in two sections. The top section is covered by MILO (90 degrees for MILO and/or 60 degrees for MILO 60) and the lower section is covered by MICA (100 degrees). The horizontal coverage of these two sections can be considered fairly constant, depending on the particular loudspeaker enclosure covering each area of the venue, regardless of the number of array elements on each section or the angles between them.

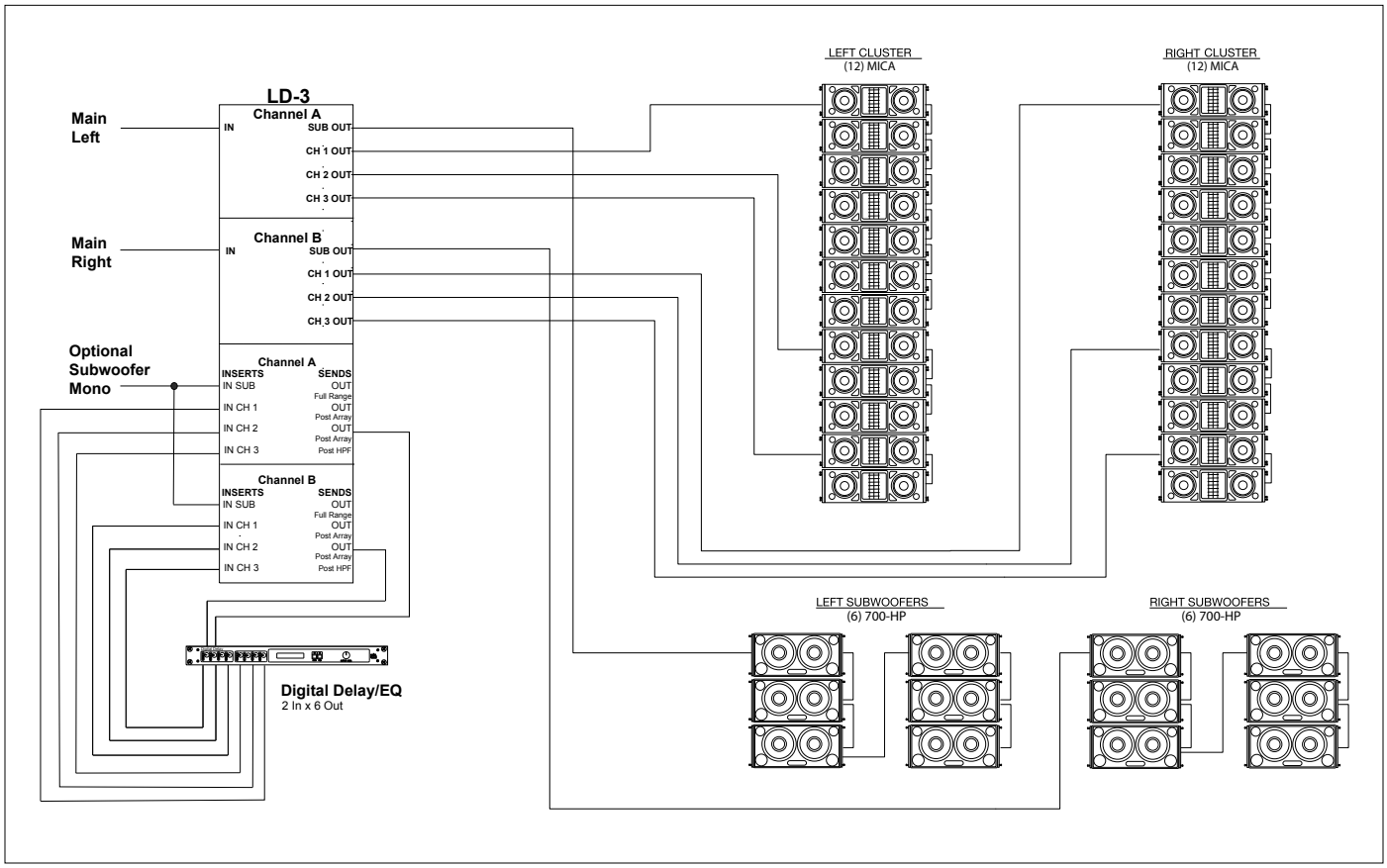

Figure 5.3. Sample block diagram of MICA array

Using Meyer Sound Processors to Drive and Optimize the Array

The Galileo 616 loudspeaker management system and the LD-3 compensating line driver are specifically designed to allow you to follow these optimization strategies:

- The array can be divided in zones.
- The atmospheric correction capabilities of these processors compensates for the air absorption of the air at high frequencies. Each section allows different correction settings according to the distance of each section's intended coverage.
- The processors effectively manage low-frequency build-up in the array and correct all zones of the array with the same correction.

In addition to their unique atmospheric correction for high frequencies and their low-frequency compensation capabilities, these Meyer Sound processors feature:

- Low-pass and high-pass filters with minimal phase shift that can effectively integrate subwoofers with MICA arrays.
- Robust output line drivers that easily drive Meyer Sound self-powered systems over long cable runs.



Figure 5.4. The LD-3 air attenuation compensating line driver

NOTE: The MILO setting within the LD-3's Array Correction section can be used effectively with MICA. For more information on the LD-3, please visit www.meyersound.com.

The Galileo loudspeaker management system is a hardware/software system providing all of the facilities required to drive and align sound reinforcement systems, and offering fixed low latency across each output. The Galileo 616 is a 2U, 6-input/16-output fully digital matrix processor. Compass software provides comprehensive control of the Galileo 616 via a graphical user interface (GUI) running on a remote computer, or controlled directly from the processor front panel.

Designed as the perfect complement to Meyer Sound's self-powered loudspeakers and interfacing directly with the SIM 3 audio analyzer, the Galileo system includes digital delay lines as well as digital implementations of popular features developed over years by Meyer Sound for its acclaimed analog processors, including air absorption compensation filters, array correction, and equalization from the CP-10 and VX-1.

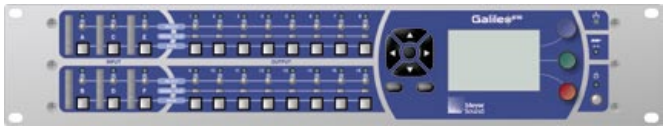

Figure 5.5. Galileo 616 Loudspeaker Management System

For more information on Galileo and its Compass control software, please visit www.meyersound.com.

Using Digital Signal Processors

Full-range signals may be applied to Meyer Sound's self-powered loudspeakers because they have built-in active crossover circuits; external crossovers and digital signal processors (DSP) are optional and should be used very carefully due to phase shifts that can cause cancellations.

If DSP is used, all zones in a MICA array as well as the subwoofers should be fed from the same DSP in order to keep their delay time the same. Otherwise you may experience phase shift differences among the MICA loudspeakers in the array and between MICA loudspeakers and the subwoofers. In addition, you should verify the delay time between channels: some DSPs may develop channel-to-channel delay errors when the DSP is near maximum throughput, which becomes more likely as the number of filters the DSP is using increases.

In no case should a filter higher than 2nd-order be used to optimize the interaction between the MICA array and the subwoofers. The additional phase shift introduced deteriorates the impulse response and higher roll-off does not improve crossover interaction.

TIP: Some filters on the Galileo and LD-3 are parabolic filters with minimal phase shift — designed specifically to optimize the interaction between MICA and subwoofers; most commercially available DSP devices have no presets to emulate these minimum-phase parabolic filters.

In addition, if the loudspeakers are going to be driven directly from the DSP, verify that the outputs of the processor have the driving capabilities to drive the total load presented by the loudspeakers connected to it. Please refer to the Audio Input section on page 11 in this manual.

NOTE: When precise array design, subwoofer integration, DSP and delay systems, and compensation for acoustical conditions all come into play, measurement and correction tools are a must. Meyer's SIM measurement system, Galileo, LD-3, CP-10 parametric equalizer and the VX-1 program equalizer are highly recommended.

USING MICA WITH SUBWOOFERS

A MICA system will provide full bandwidth frequency range down to 60 Hz. The height of the array (number of cabinets) will determine the total SPL available and how much low frequency energy can be provided, proportional to the upper-frequency spectrum.

If higher SPL is necessary, or the program content requires additional low-frequency energy (e.g., the reinforcement of popular music), then subwoofers should be used to augment your MICA loudspeaker array(s).

Meyer Sound subwoofers, such as 700-HP, 600-HP and 650-P can achieve frequency response down to the 30 to 36 Hz range, extending the system response appreciably and increasing the acoustic power of the system in the lowest frequencies. The ideal ratio of MICA loudspeakers to subwoofers depends on three factors:

- Configuration of the array (number of elements and angles)
- Placement of the subwoofers — whether they are flown or ground-stacked.
- Frequency content of the signal being reproduced by the system.

For most applications, two MICA loudspeakers for each ground-stacked subwoofer yield good results in frequency response and headroom. Using higher ratios (for example, three MICA cabinets for one subwoofer) can have very negative consequences, decreasing the headroom in the low frequencies and exposing the drivers in the subwoofers to excessive levels.

NOTE: The limit LEDs indicate when the safe power level is exceeded. If the subwoofers used in the system begin to limit before reaching the required SPL at low frequencies, consider adding more subwoofers to satisfy the SPL requirements without exposing the drivers to excessive heat and/or excursion — and eventual damage.

Using the filters in Galileo and LD-3 helps to easily integrate and optimize your MICA arrays with subwoofers. The use of high-pass filters may augment array headroom by removing lower frequencies near the unit's lower operating range, while low-pass filters can remove unwanted mid-low frequencies reproduced by the subwoofers. The use of these filters reduces the area of overlap and minimizes the interaction and possible cancellations between subsystems.

NOTE: Full-range signals may be applied to Meyer Sound's self-powered loudspeakers and subwoofers because they have built-in active crossovers. However, the use of external filters — like the ones in the Galileo and LD-3 — is optional, and should be used very carefully to minimize phase shifts that can cause cancellations and deteriorate the impulse response of the system.

Using MICA with the 700-HP Subwoofer

A MICA array can be deployed in combination with Meyer Sound 700-HP subwoofers in applications where high SPL is necessary, or the program content requires additional low-frequency energy. For these applications the features of the 700-HP are desirable — ultrahigh power and response down to 30 Hz.

The 700-HP can be ground-stacked under a flown MICA array or next to a MICA ground-stacked array. In addition, the 700-HP subwoofers can be flown in a straight array next to the MICA array using the optional MRK-700 rigging kit and the MTG-700 top grid.

Table 5.1 shows how you can integrate MICA with 700-HP using the Galileo and LD-3 filtering capabilities to fine-tune the system. All data in Table 5.1 is based on designs with a 2:1 ratio and in a close-proximity, coplanar orientation.

NOTE: When loudspeakers and subwoofers are physically separated by more than 4 feet — or delay must be used between them — a measurement system such as SIM should be used to determine the correct delay and polarity.

Table 5.1: MICA and 700-HP Subwoofer

HPF	LPF	Ø Reverse Switch	Result
Off	Off	Engaged	Boost in the 100 Hz region
80	80	Off	Very flat response

NOTE: Because the 700-HP and the 650-P subwoofers have identical phase in their operating range, Table 5.1 also applies when using the 650-P subwoofer (650-P set to pin 2 positive). However, due to the higher output and headroom of the 700-HP, when using the 650-P a lower ratio must be used to achieve a similar system headroom, e.g., three MICA with two 650-P.

Using MICA with the 600-HP Subwoofer

A MICA array can be deployed in combination with Meyer Sound 600-HP subwoofers in applications where the extended low frequency output and other features of the 700-HP are not needed and the ones of the 600-HP are desirable — compact size and versatile MICA-compatible flying capabilities. The 600-HP subwoofer extends the range of the system down to 36 Hz.

600-HP subwoofers with the optional MRF-600 can be flown on the same array as MICA or they can also be flown in an array next to MICA by using the MG-MICA multipurpose top grid. In addition, 600-HP subwoofers can be ground-stacked under a flown MICA array, next to a MICA array, or in the same ground-stacked array.

Table 5.2 shows how you can integrate MICA with 600-HP using the Galileo and LD-3 filtering capabilities to fine-tune the system. All data in Table 5.2 is based on designs with a 2:1 ratio and in a close-proximity, coplanar orientation.

NOTE: When loudspeakers and subwoofers are physically separated by more than 4 feet — or delay must be used between them — a measurement system such as SIM should be used to determine the correct delay and polarity.

Table 5.2: MICA and 600-HP Subwoofer

HPF	LPF	Ø Reverse Switch	Result
Off	Off	Engaged	Boost in the 100 Hz region
80	80	Off	Very flat response

NOTE: Depending on the desired SPL, program content and system configuration, applications using the 600-HP rather than the 700-HP might require a lower ratio to achieve similar system headroom, e.g., three MICA and two 600-HP.

CHAPTER 6: SYSTEM DESIGN AND INTEGRATION TOOLS

Meyer Sound offers two comprehensive tools to assist you with the acoustical and functional requirements of system design and optimization. This chapter introduces you to Meyer Sound MAPP Online — a powerful online acoustical prediction tool — and the SIM audio analyzer, a robust instrumentation package for system measurement, analysis, and more.

MEYER SOUND MAPP ONLINE

MAPP Online (Figure 6.1) is a powerful, cross-platform, Java-based application for accurately predicting the coverage pattern, frequency response, impulse response, and maximum SPL output of single or arrayed Meyer Sound loudspeakers.

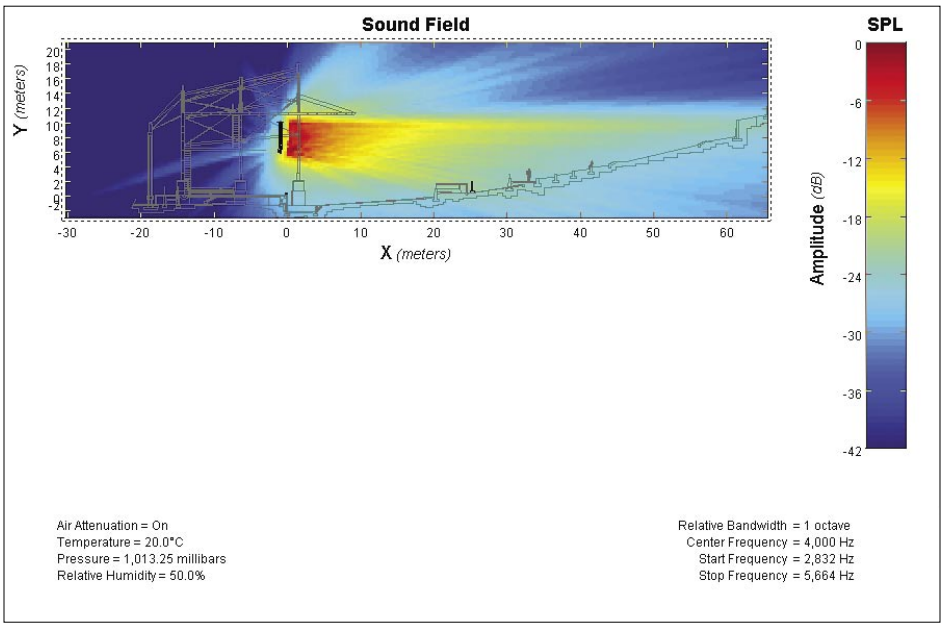

Figure 6.1. MAPP Online is an intuitive, powerful system design tool.

MAPP Online facilitates configuring arrays of a wide variety of Meyer Sound products and, optionally, defines the environment in which they will operate, including air temperature, pressure, and humidity, as well as the location and composition of walls. You can find MAPP Online at:

www.meyersound.com/products/software/mapponline

NOTE: In order to use MAPP Online, you will need to register by clicking "Apply for MAPP Online" on the Web site listed above. After registration and upon approval, an e-mail will be sent to you with a user name and password along with the address for the Web site where you can download MAPP Online. Online instructions will guide you through the download and setup process.

As its name indicates, MAPP Online is an online application: when a prediction is requested, data is sent over the Internet to a high-powered server at Meyer Sound that runs a sophisticated acoustical prediction algorithm using high-resolution, complex (magnitude and phase) polar data. Predicted responses are returned over the Internet and displayed on your computer in color.

With MAPP Online, you can:

- Plan an entire portable or fixed loudspeaker system and determine delay settings for fill loudspeakers.
- Clearly see interactions among loudspeakers and minimize destructive interference.
- Place microphones anywhere in the sound field and predict the frequency response, impulse response, and sound pressure level at the microphone position using MAPP Online's Virtual SIM feature.
- Refine your system design to provide the best coverage of the intended audience area.
- Use a virtual VX-1 program equalizer to predetermine the correct control settings for best system response.
- Gain valuable load information about the array to determine rigging capacities.

MAPP Online enables you to come to an installation prepared with a wealth of information that ensures the system will satisfy your requirements "out of the box" – including basic system delay and equalization settings. Its accurate, high-resolution predictions eliminate unexpected on site adjustments and coverage problems. With MAPP Online, every sound system installation has a maximum chance of success.

MAPP Online is compatible with Windows, Linux, Unix, and Apple Macintosh computers running Mac OS X version 10.1.2 or higher. The MAPP Online Web page lists additional system requirements and recommendations.

SIM MEASUREMENT SYSTEM

SIM is a measurement and instrumentation system including a selection of hardware and software options, microphones and accessory cables. The SIM audio analyzer is optimized for making audio frequency measurements of an acoustical system with a resolution of up to 1/24 of an octave; the high resolution enables you to apply precise electronic corrections to adjust system response using frequency and phase (time) domain information.

Source Independent Measurement Technique

The SIM audio analyzer implements the Meyer Sound source independent measurement technique, a dual-channel method that accommodates statistically unpredictable excitation signals. Any excitation signal that encompasses the frequency range of interest (even intermittently) may be used to obtain highly accurate measurements of acoustical or electronic systems. For example, concert halls and loudspeaker systems may be characterized during a musical performance using the program as the test signal, allowing you to:

- View measurement data as amplitude versus time (impulse response) or amplitude and phase versus frequency (frequency response)
- Utilize a single-channel spectrum mode
- View frequency domain data with a logarithmic frequency axis
- Determine and internally compensate for propagation delays using SIM Delay Finder function

Applications

The main application of SIM is loudspeaker system testing and alignment. This includes:

- Measuring propagation delay between the subsystems to set correct polarities and set very precise delay times
- Measuring variations in frequency response caused by the acoustical environment and the placement and interaction of the loudspeakers to set corrective equalization
- Optimizing subwoofer integration
- Optimizing loudspeaker arrays

SIM can also be used in the following applications:

- Microphone calibration and equalization
- Architectural acoustics
- Transducer evaluation and correction
- Echo detection and analysis
- Vibration analysis
- Underwater acoustics

CHAPTER 7: QUICKFLY RIGGING

MICA loudspeakers feature Meyer Sound's QuickFly rigging system with rugged, reliable and simple components. QuickFly facilitates deploying the loudspeakers in a variety of applications. MICA is designed to be rigged using professional components, and its custom front and rear GuideALinks rigidly couple the individual MICA enclosures for flying, stacking, or transporting in stacks while still in various splayed positions.

CAUTION: All Meyer Sound products must be used in accordance with local, state, federal and industry regulations. It is the owner's and/or user's responsibility to evaluate the reliability of any rigging method for their application. Rigging should be carried out only by experienced professionals.

CAUTION: Always use properly rated rigging hardware.

CAUTION: It is important to inspect rigging hardware regularly and replace worn or damaged components immediately.

MICA GUIDEALINKS

MICA's captive QuickFly rigging hardware features rigid GuideALinks contained within recessed guides in the bottom front and rear corners of the enclosure. A slot and convenient pinned knob allow each link to be moved and pinned for arraying and storage. In normal use, the front links are used as the pivot point, and the splay between enclosures is introduced with the rear links.

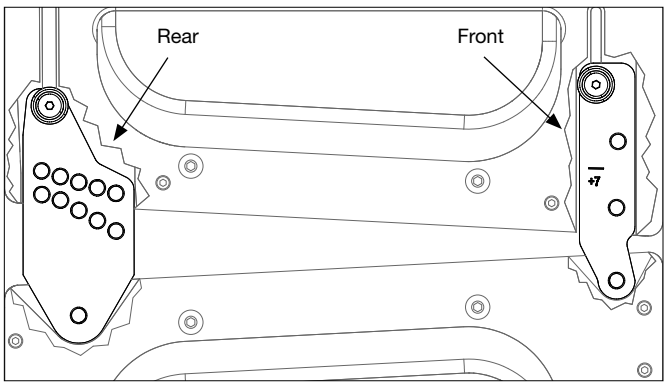

Figure 7.1 MICA front and rear GuideALinks

The rear links permit 10 splay angles between 0 and 6 degrees for optimum acoustical performance. These angles are: 0º, 0.5º, 1º, 1.5º, 2º, 2.5º, 3º, 4º, 5º, and 6º.

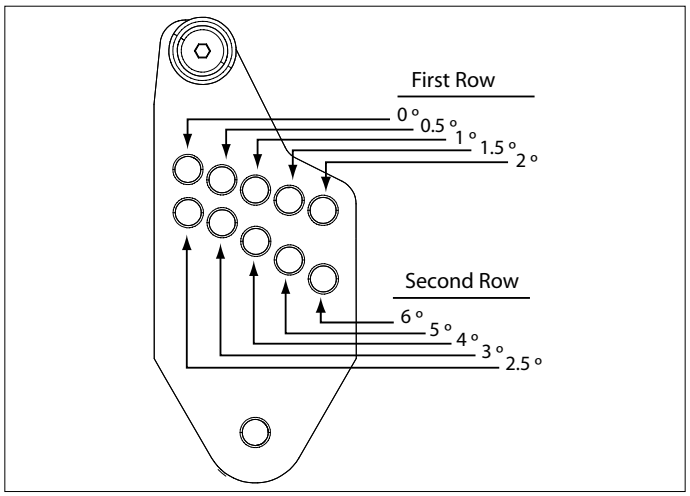

Figure 7.2. MICA GuideALink (shown removed from frame) has two rows with angles

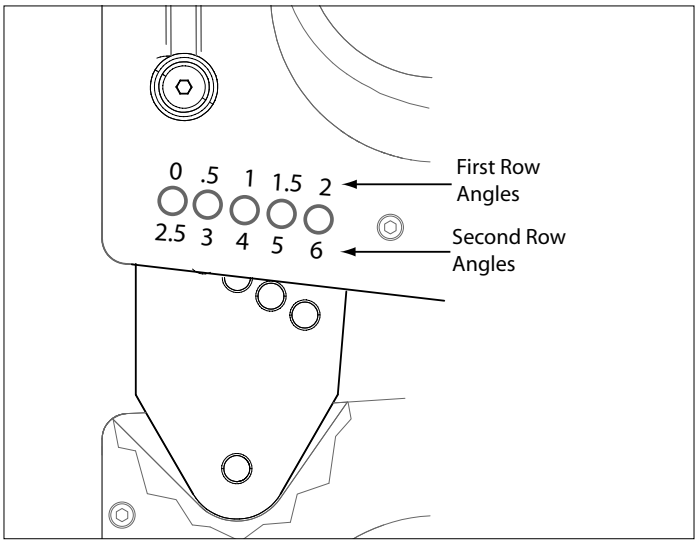

Figure 7.3. MICA frame with engraved angles for the rear GuideALink

CAUTION: As part of the regular inspection and maintenance procedure for MICA loudspeakers, check each of the captive GuideALink pins to ensure that they are tight by turning them counterclockwise by hand. If a pin turns, it must be reset into the link using Loctite 290, and be allowed to cure for 48 hours and retested before the loudspeaker is flown.

The front links may be set in two different positions:

- 0°: This is the standard position and it is used to achieve between 0 and 6 degrees (adjusted on the rear) for optimal acoustical performance.
- 7°: This is the extended position to add 7 degrees to the angles set on the rear link. These extended angles (7 to 13 degrees) can be use to extend the coverage or to create a break in the array, for example, to miss balcony fronts and other architectural obstacles.

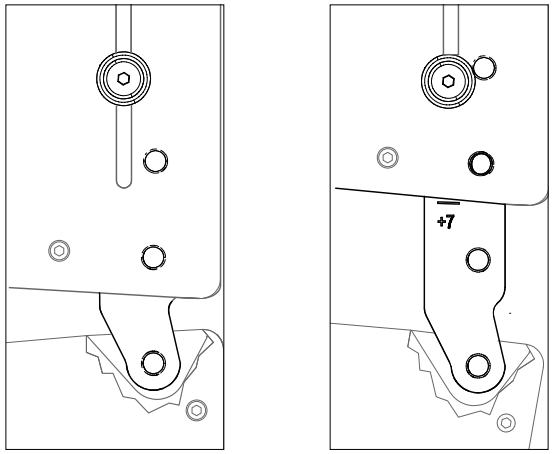

Figure 7.4. MICA front GuideALinks, standard (0°) and extended (7°)

NOTE: Optimal acoustical performance for MICA is achieved by using angles between 0 and 6 degrees in a MICA array; use extended angles (7 to 13 degrees) with caution and only if necessary.

The rigid connections created by the QuickFly rigging hardware allow easy adjustment of the array tilt, often eliminating the need for pull-back straps in flown configurations.

THE MG-MICA MULTIPURPOSE GRID

The MG-MICA multipurpose grid (Figure 7.6) allows multiple MICA compact high-power curvilinear array loudspeakers to be flown or ground-supported in numerous configurations. In addition, the MG-MICA grid can be used with 600-HP subwoofers that have been fitted with MRF-600 rigging frames. The subwoofer's MRF-600 GuideALink rigging is directly compatible with MICA, and links to both the grid and MICA enclosures using the same slots and pins.

CAUTION: For complete information on load ratings and how to set up the MG-MICA and other MICA rigging accessories, please use the MG-MICA Assembly Guide (part number 05.147.034.01) available on www.meyersound.com.

The MG-MICA grid can accommodate a variety of pickup configurations using its six pick-up points — three on each side of the frame.

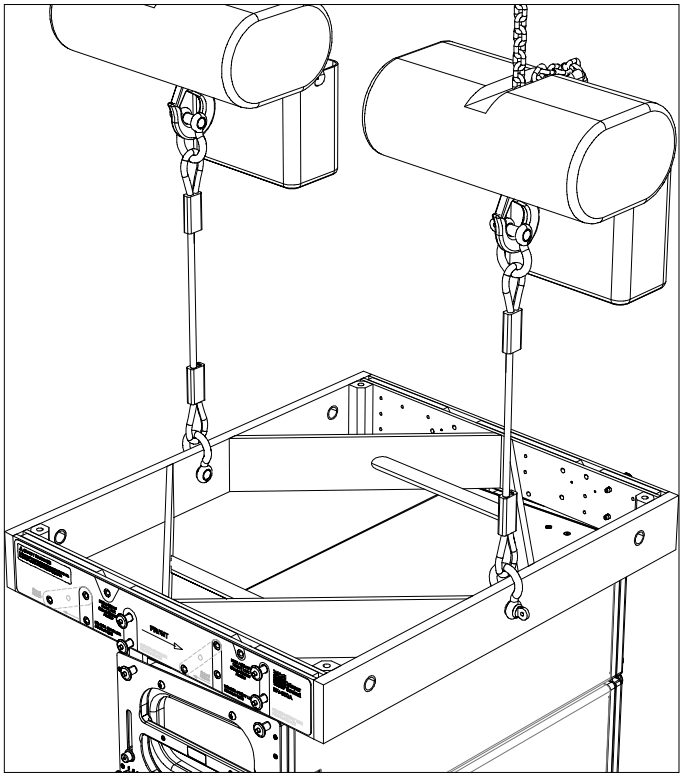

Figure 7.5. MG-MICA multipurpose grid is used to fly a MICA array

The MG-MICA grid allows you to fly MICA loudspeakers in two positions with respect to the grid. The "rear flown" position is most useful for achieving superior uptilt in the grid and the "front flown" position helps achieving more downtilt.

In flown configurations, the first MICA loudspeaker in the array is always connected to the MG-MICA grid at the 0° position. The up and down tilt of the MG-MICA and the complete array hung underneath can additionally be adjusted using chain motors, or differing lengths of steel or span set.

Using the MG-MICA for Ground-Stacking

In addition to its flown capabilities, the MG-MICA grid forms a secure base for ground-stacking when the leveling feet are installed. For ground-stacking, secure the bottom MICA enclosure to the MG-MICA grid using the captive GuideALinks and quick release pins.

MICA loudspeakers can be stacked by themselves on the MG-MICA grid, or can be placed on top of 600-HP subwoofers (fitted with the optional MRF-600 rigging frames) pinned to the grid.

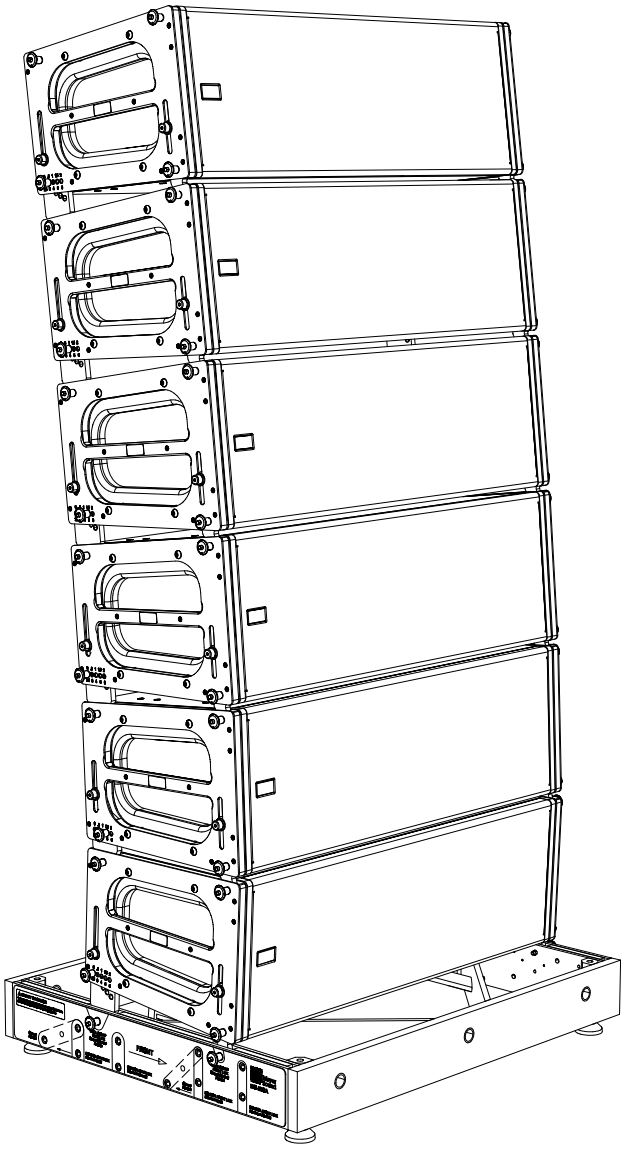

Figure 7.6. Ground-stacking MICA enclosures using the MG-MICA multipurpose grid

MICA Loudspeaker Pinned Directly to MG-MICA Grid

- Use the 2.5 position on the rear GuideALink to achieve a 0-degree orientation with respect to the grid.
- Use the 0 position to achieve a 2.5-degree downtilt.
- Use the 6 position to achieve a 3.5-degree uptilt.

MICA Loudspeaker Pinned Directly to 600-HP Subwoofer

- Use the 0 position on the rear GuideALink to achieve a 0-degree orientation with respect to the 600-HP.
- Use the 4 position to achieve a 4-degree uptilt (positions 5 and 6 cannot be pinned).
- No downtilt is achievable without the use of the MDTL-MICA downtilt link (see the following section).

600-HP Subwoofer Pinned Directly to MG-MICA Grid

- Use the -3 position on the rear GuideALink to achieve a 0.5-degree uptilt with respect to the grid.
- Use the 0 position to achieve a 2.5-degree downtilt.

CAUTION: Do not use 600-HP rear GuideALink positions greater than 0 when ground-stacking. These are for flown applications only and may make the stack unstable.

The Optional MDTL-MICA Downtilt Link

The MDTL-MICA downtilt link adds a fixed amount of downtilt to ground-stacked MICA loudspeakers, with an additional 6 degrees of adjustment possible with the MICA's rear GuideALinks. The downtilt link connects between the MG-MICA grid or the top 600-HP subwoofer and the lowest MICA loudspeaker.

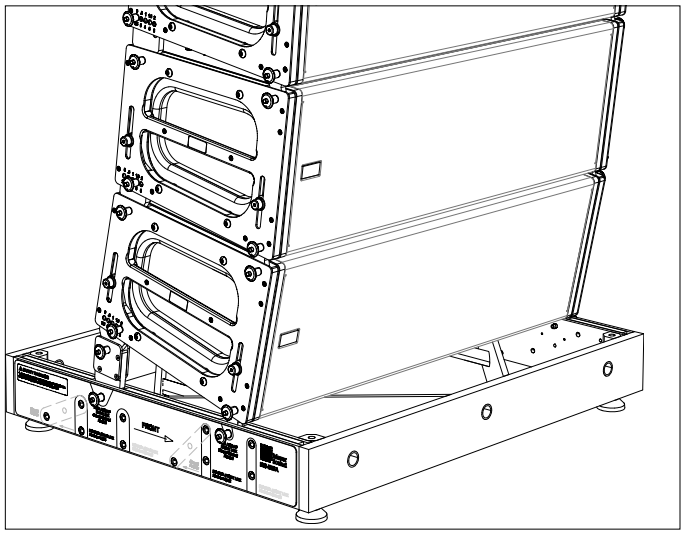

Figure 7.7. Adding downtilt when ground-stacking with the MDTL-MICA link

MICA Loudspeaker Pinned to Downtilt Link and MG-MICA Grid

- Use the 0 position on the rear GuideALink to achieve an 18.5-degree downtilt with respect to the grid.
- Use the 6 position to achieve a 12.5-degree downtilt.

MICA Loudspeaker Pinned to Downtilt Link and 600-HP Subwoofer

- Use the 0 position on the rear GuideALink to achieve a 16-degree downtilt with respect to the 600-HP.
- Use the 6 position to achieve a 10-degree downtilt.

CAUTION: The MDTL-MICA downtilt link is only rated for ground-stacking applications, and should not be used in flown configurations..

NOTE: For complete information on ground-stacking MICAs using the MG-MICA Multipurpose Grid, please use the MG-MICA Assembly Guide (part number 05.147.034.01), available on www.meyersound.com.

THE MTF-MILO/MICA TRANSITION FRAME

When using MICA enclosures as downfill or frontfill with a MILO array, the MTF-MILO/MICA transition frame is used between the lowest MILO and the MICAs. The transition frame provides nine angles between 0 degrees and 5 degrees (0.5-degree increments between 0 and 3 degrees, and 1-degree increments between 3 and 5 degrees). These are the same angles available with MILO.

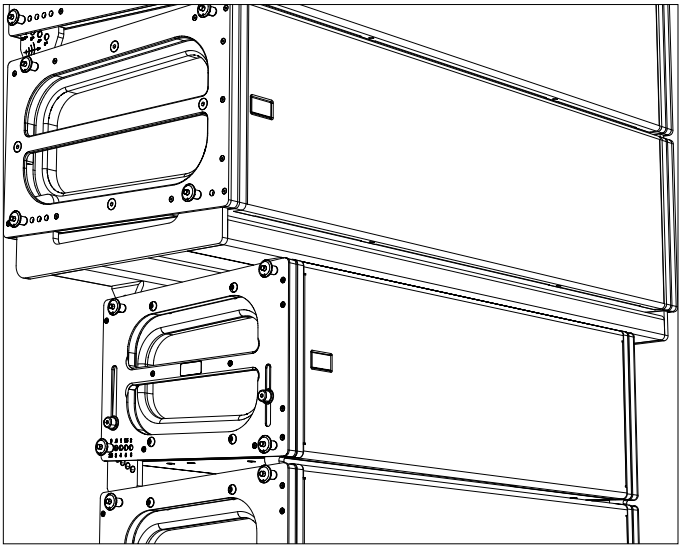

Figure 7.8. An array with MILO and MICA using the MTF-MILO/MICA transition frame

MCF-MICA CASTER FRAME

The heavy-duty MCF-MICA Caster Frame (Figure 7.9) allows you to transport stacks of up to four MICA enclosures. The MICA GuideALinks are fully compatible with the optional MCF-MICA caster frame and connect the enclosures securely, allowing the convenient transport of straight or splayed stacks of MICA. The MCF-MICA's rugged steel frame facilitates the use of forklifts.

In addition the MCF-MICA can also be used to transport 600-HPs fitted with MRF-600 rigging frames in stacks of up to three 600-HP high.

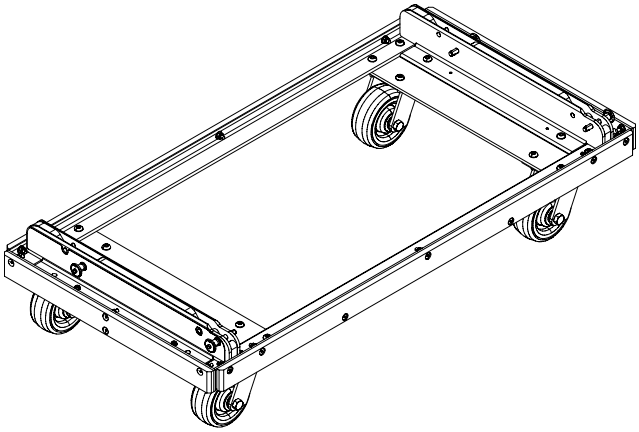

Figure 7.9. MICA caster frame

Whether you're deploying or striking an array, the MCF-MICA can temporarily support its weight — making it easy to assemble or disassemble the array in stacks of up to four MICAs.

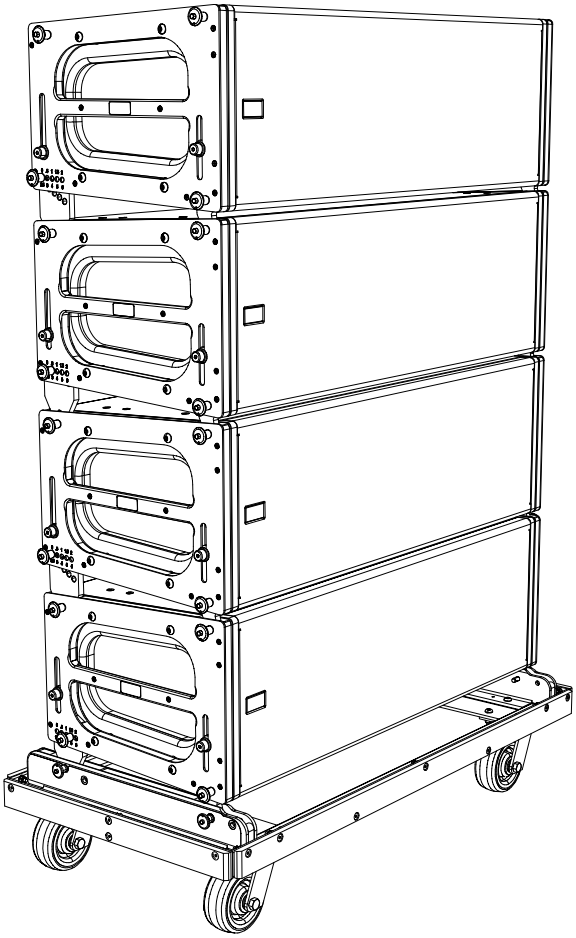

Figure 7.10. Transporting MICA using the MCF-MICA caster frame

CAUTION: Do not exceed **four** MICA's high to avoid tipping over the stack.

CAUTION: Avoid moving the MICA stack in the front-to-back direction of the loudspeakers (the long side); always move the stack sideways to avoid tipping it over.

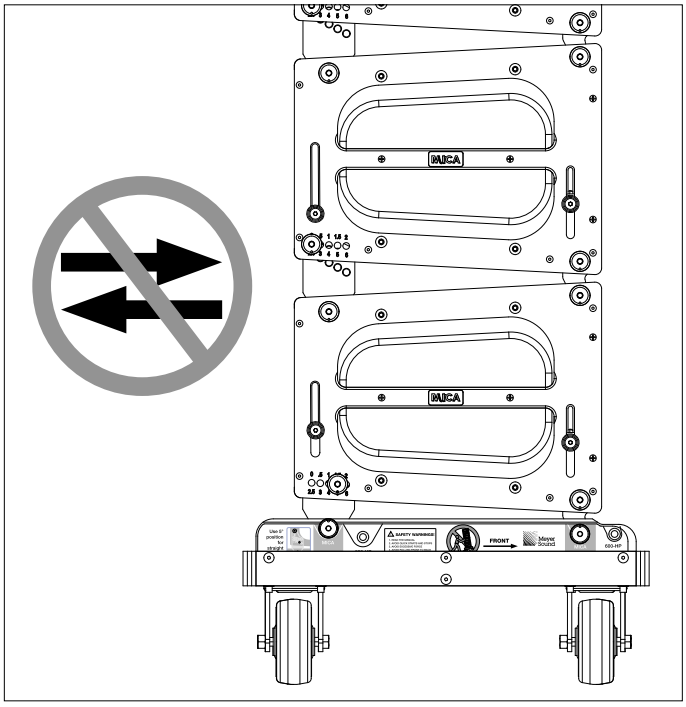

Figure 7.11. The MICA stack should only be moved sideways when being transported on the MCF-MICA caster frame

In order to transport stacks of MICA as safely as possible, the MCF-MICA has two positions — one for MICA and one for 600-HP. The MICA position allows the stack to have its center of gravity as close as possible to the center of the caster frame.

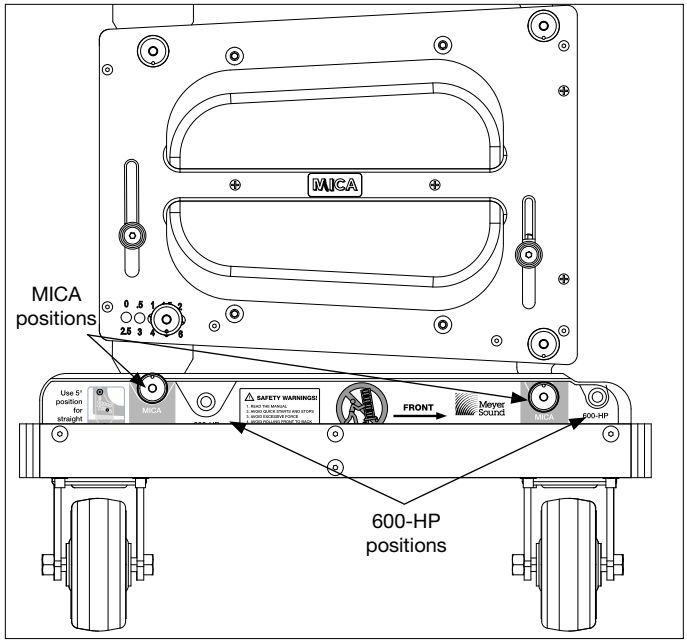

Figure 7.12. MICA and 600-HP positions on the MCF-MICA

CAUTION: Always use the MICA position when transporting MICAs on the MCF-MICA to avoid tipping over the stack.

The MICA GuideALinks allow multiple transport angles with the MCF-MICA caster frame.

- Use the 5 position on the MICA rear GuideALink to get the first MICA with respect to the caster frame at 0 degrees. This setting is preferred when all MICAs are at 0 degrees.
- Use the 0 position to downtilt the first MICA with respect to the caster frame, to compensate if the rest of the MICAs in the stack have severe angles.

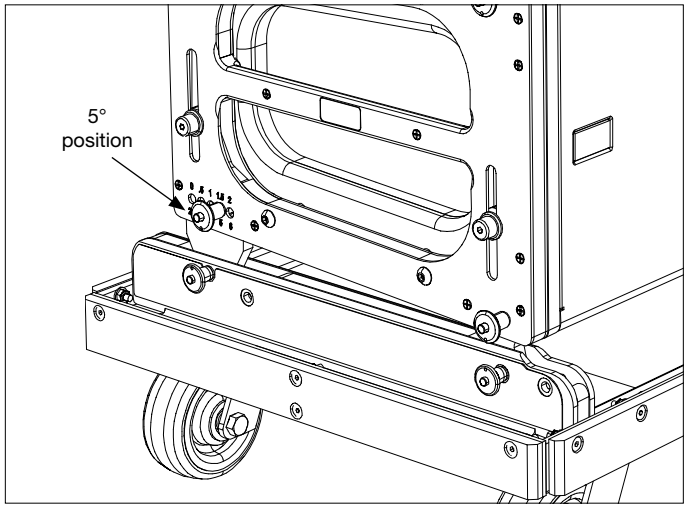

Figure 7.13. First MICA at 0 degrees (straight-up) with respect to the MCF-MICA

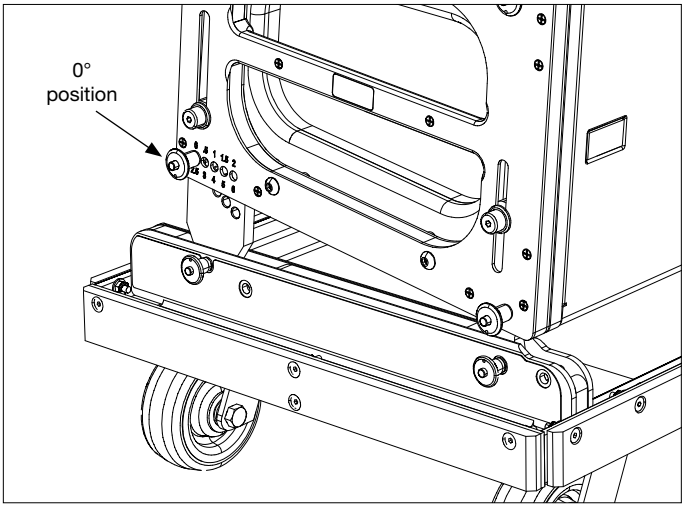

Figure 7.14. First MICA at -5 degrees (downtilted) with respect to the MCF-MICA

CAUTION: Avoid using the front link in the extended position (+7) when transporting MICAs on the MCF-MICA to avoid tipping over the stack.

TIP: The MG-MICA can travel installed on top of a MICA stack.

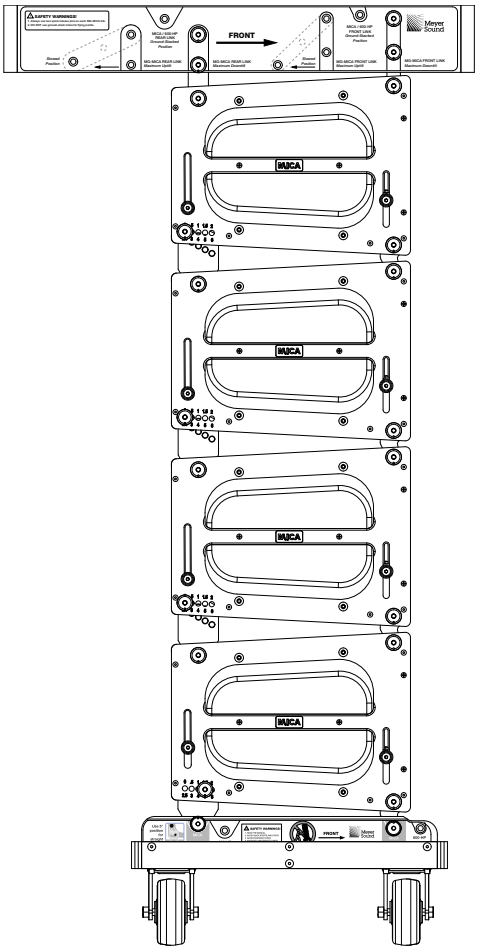

Figure 7.15. Transporting MICA enclosures with the MG-MICA installed on the top of the stack

The MCF-MICA also allows 600-HP subwoofers to be supported in a ground-stacked configuration.

CAUTION: When using the MCF-MICA caster frame to ground-stack 600-HP subwoofers, make sure all four caster wheels are blocked to prevent the stack from rolling away.

Other rigging accessories as well as a range of rugged protective transport covers are also available. For more information, please visit www.meyersound.com.

APPENDIX A: AMPLIFIER REPLACEMENT AND OPTIONAL RAIN HOOD

REMOVING THE MPW-4/MICA AMPLIFIER

If you need to remove the MPW-4/MICA amplifier from a MICA loudspeaker, perform the following steps:

1. Using a #2 Phillips screwdriver, remove all six screws from the amplifier module — three each on the left and right sides. This will free the MPW-4/MICA electronics module from MICA cabinet (Figure A.1).

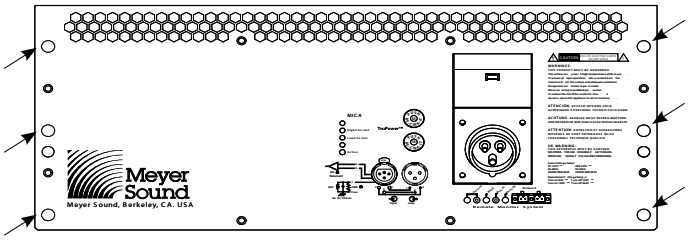

Figure A.1. Location of the six screws securing the MPW-4/MICA amplifier module

2. Carefully slide the amplifier module out of the cabinet using care not to stress the cables.
3. Disconnect the two 4-pin loudspeaker connectors. Note that the harness with red and black wires goes to the connector closest to the center of the amplifier module, and labeled “A”, while the harness with green and white cables goes to the connector closest to the left side, and labeled “B” (Figure A.2).

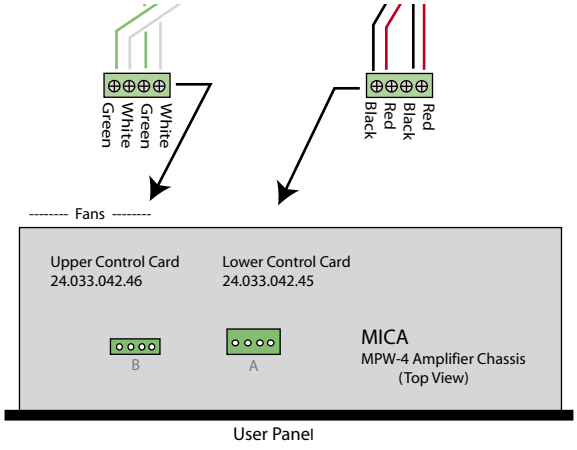

Figure A.2. MICA’s two 4-pin connectors

REPLACING THE MPW-4/MICA AMPLIFIER

To replace MICA’s MPW-4 amplifier, do the following:

1. Gently slide the amplifier partially back into MICA and connect the two loudspeaker connectors. Make sure they are connected properly. The harness with red and black wires goes to the connector closest to the center of the amplifier module, and labeled “A”, while the harness with green and white cables goes to the connector closest to the left side, and labeled “B”.
2. Slide the amplifier module the rest of the way into the cabinet, until it rests against the foam gasket. Start all six screws into the holes before tightening them.
3. Once all six screws are started, tighten them using a #2 Phillips screwdriver.

CAUTION: Please note that MICA and other Meyer Sound amplifiers are different. Specific functions for each model, such as crossover points, frequency and phase correction and driver protection are determined by the control cards installed inside the amplifier. Do not exchange amplifiers between MICA and other loudspeakers.

CAUTION: Never use power tools in high torque settings to remove or replace the stainless steel amplifier and/or rain hood screws on the MICA loudspeaker.

INSTALLING THE MICA QUICK-CLIP RAIN HOOD

1. Remove the three screws along the top side of the recess just above the amplifier chassis, using a Phillips screwdriver; set the screws aside.
2. Position the 24” retainer strip in the recess just above the amplifier, placing the side with the three holes against the enclosure and lining up those holes with the ones in the enclosure. Note that the three cutouts to allow screwdriver access are facing toward you.
3. Attach the retainer strip to the enclosure using the three screws removed in step 1. Hand-tighten the screws with the Phillips screwdriver until the retainer is snug against the cabinet, and the screw heads are flush with the inside surface of the retainer.

CAUTION: Do not use a screw gun or similar device to attach the retainer strip, as the excess torque may crack or damage it.

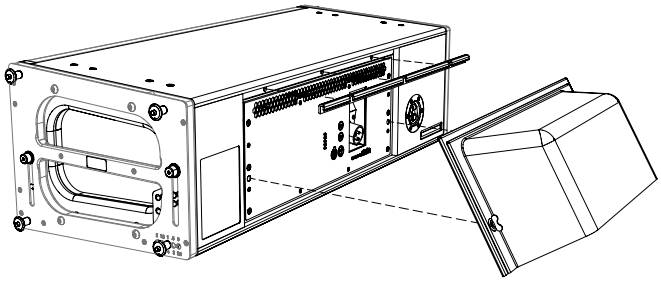

4. Check the rain hood to assure that the gasket material is firmly attached all along the inner edges, and that two butterfly-type latch “keys” are inserted in each of the two shorter sides of the hood.
5. Holding the rain hood at a slight angle away from the enclosure, rotate the top (long) edge of the hood into the slot formed by the retainer strip. Push the hood upward into the slot until it stops.
6. Move the hood toward the enclosure until it makes contact and its side edges are within the insets/ recesses on the left and right sides of the amplifier chassis. Press in to compress the foam against the enclosure.
7. Holding the rain hood in place, firmly push the latch keys one at a time into their mating holes on the two sides of the amplifier chassis, and once inserted completely give a quarter-turn clockwise to lock.
8. To remove the rain hood, reverse steps 5 through 7.

APPENDIX B: MICA SPECIFICATIONS

ACOUSTICAL	
Note: The low-frequency power response of the system will increase according to the length of the array.	
Operating frequency range	60 Hz - 18 kHz
	Note: Recommended maximum operating frequency range. Response depends upon loading conditions and room acoustics.
Free field frequency response	75 Hz - 17 kHz ±4 dB
	Note: Measured with 1/3-octave frequency resolution at 4 meters.
Phase response	1 kHz - 16 kHz ±30°
Maximum peak SPL	138 dB
	Note: Measured with music referred to 1 meter.
Dynamic range	>110 dB
Horizontal coverage	100°
Vertical coverage	Varies, depending on array length and configuration
Acoustical crossover	1000 Hz
	Note: At this frequency, the transducers produce equal sound pressure levels.
TRANSDUCERS	
Low/low-mid frequency	Two high-power 10" cone drivers with neodymium magnets Nominal impedance: 4 Ω Voice coil size: 2" Power handling capability: 1200 W (AES); 1800 W peak
	Note: Power handling is measured under AES standard conditions: both transducers driven continuously for two hours with band limited noise signal having a 6 dB peak-average ratio. Peak power handling is measured with both transducers driven for 100 milliseconds with pink noise signal having a 12 dB peak-average ratio.
	Note: To eliminate interference at shorter wavelengths, the two 10-inch drivers work in combination at lower frequencies (60 Hz - 320 Hz). At mid frequencies (320 Hz - 1000 Hz) only one cone driver is fed from the crossover to maintain optimal polar and frequency response characteristics.
High frequency	Two 3" compression drivers Nominal impedance: 8 Ω Voice coil size: 3" Diaphragm size: 3" Exit size: 1.2" Power handling capability: 360 W (AES); 720 W peak
	Note: Power handling is measured under AES standard conditions: both transducers driven continuously for two hours with band limited noise signal having a 6 dB peak-average ratio. Peak power handling is measured with both transducers driven for 100 milliseconds with pink noise signal having a 12 dB peak-average ratio.
Note: The two drivers are coupled to a 100-degree-horizontal constant-directivity horn through a proprietary acoustical combining manifold (REM).	

AUDIO INPUT	
Type	Differential, electronically balanced
Max. common mode range	±15 V DC, clamped to earth for voltage transient protection
Connectors	Female XLR input with male XLR loop output or VEAM all-in-one connector (integrates AC, audio, and network)
Input impedance	10 kΩ differential between pins 2 and 3
Wiring	Pin 1: Chassis/earth through 220 kΩ, 1000 pF, 15 V clamp network to provide virtual ground lift at audio frequencies Pin 2: Signal + Pin 3: Signal - Case: Earth ground and chassis
DC Blocking	None on input, DC blocked through signal processing
CMRR	>50 dB, typically 80 dB (50 Hz – 500 Hz)
RF filter	Common mode: 425 kHz Differential mode: 142 kHz
TIM filter	<80 kHz, integral to signal processing
Nominal input sensitivity	0 dB V (1 V rms, 1.4 V pk) continuous is typically the onset of TPL limiting for noise and music.
Input level	Audio source must be capable of producing a minimum of +20 dBV (10 V rms, 14 V pk) into 600 Ω in order to produce maximum peak SPL over the operating bandwidth of the loudspeaker
AMPLIFIERS	
Amplifier type	Four-channel complementary MOSFET output stages (class AB/H)
Output power	3020 W (four channels; 2 x 950 W, 2 x 560 W); 6000 W peak
	Note: Amplifier wattage rating based on the maximum unclipped burst sine-wave rms voltage that the amplifier will produce for at least 0.5 seconds into the nominal load impedance. Peak power based on the maximum unclipped peak voltage that the amplifier will produce for at least 100 milliseconds into the nominal load impedance.
THD, IM TIM	< .02%
Load capacity	4 Ω low and mid; 8 Ω high channels
Cooling	Forced air cooling, 4 fans total (2 ultrahigh-speed reserve fans)
AC POWER	
AC power connector	250 V AC NEMA L6-20 twistlock, IEC-309 male, PowerCon, or VEAM
Voltage selection	Automatic, two ranges, each with high-low voltage tap (uninterrupted)
Safety agency rated operating voltage	95 V AC – 125 V AC, 208 V AC - 235 V AC, 50/60 Hz
Turn on/turn off points	85 V AC - 134 V AC; 165 V AC - 264 V AC
Current Draw	
Idle current	1.1 A rms (115 V AC), 0.55 A rms (230 V AC), 1.3 A rms (100 V AC)
Max. long-term continuous current (>10 sec)	5.4 A rms (115 V AC); 2.7 A rms (230 V AC); 6.2 A rms (100 V AC)
Burst Current (<1 sec)	8.7 A rms (115 V AC), 4.3 A rms (230 V AC), 10.0 A rms (100 V AC)
Note: AC power cabling must be of sufficient gauge so that under burst current RMS conditions, cable transmission losses do not drop voltage below specified operating range at the speaker.	
Ultimate Short-Term Peak Current Draw	24.6 A rms (115 V AC), 12.3 A rms (230 V AC), 28.3 A rms (100 V AC)
Inrush Current	11 A rms (115 and 100 V AC), 15 A rms (230 V AC)
RMS NETWORK	
	Equipped with two-conductor twisted-pair network, reporting all operating parameters of amplifiers to system operator's host computer.

PHYSICAL: MICA Loudspeaker	
Enclosure	Premium birch plywood
Finish	Black textured
Protective grille	Powder-coated, hex-stamped steel, black mesh
Rigging	QuickFly rigging with four captive GuideALinks in the bottom corners of two aluminum and steel end frames, secured with quick-release pins
Dimensions	41.40 w x 13.37 h x 17.78 d (1052 mm x 340 mm x 452 mm)
Weight	150 lbs (68.04 kg)

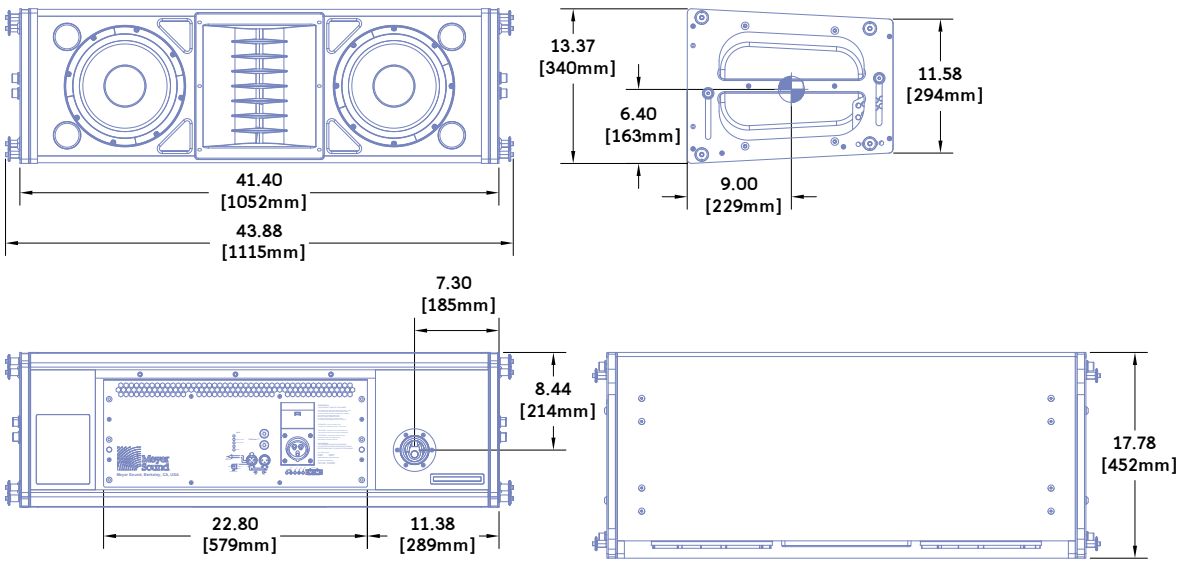



Meyer Sound Laboratories Inc.
2832 San Pablo Avenue
Berkeley, CA 94702

www.meyersound.com
T: +1 510 486.1166
F: +1 510 486.8356

© 2006
Meyer Sound Laboratories Inc.
05.147.005.01 B