MG-MICA MULTIPURPOSE GRID AND ACCESSORIES

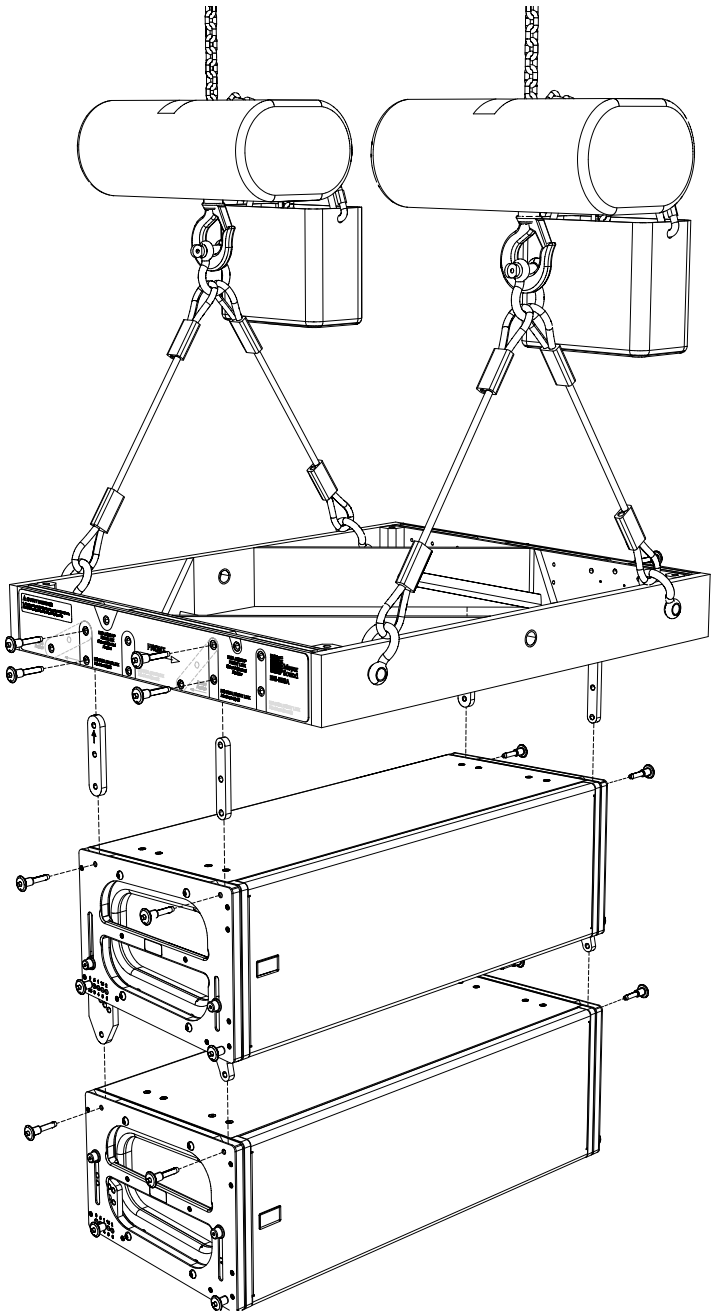

© 2005 Meyer Sound. All rights reserved.

MG-MICA Multipurpose Grid and Accessories Assembly Guide

The contents of this manual are furnished for informational purposes only, are subject to change without notice, and should not be construed as a commitment by Meyer Sound Laboratories Inc. Meyer Sound assumes no responsibility or liability for any errors or inaccuracies that may appear in this manual. Except as permitted by applicable copyright law, no part of this publication may be reproduced, stored in a retrieval system, or transmitted, in any form or by any means, electronic, mechanical, recording or otherwise, without prior written permission from Meyer Sound.

MICA, GuideALink and MAPP Online Pro are trademarks of Meyer Sound. Meyer Sound and QuickFly are registered trademarks of Meyer Sound Laboratories Inc. (Reg. U.S. Pat. & Tm. Off.). All third-party trademarks mentioned herein are the property of their respective trademark holders.

Printed in the U.S.A.

Part Number: 05.147.034.01 A

CONTENTS

This assembly guide provides instructions on how to safely assemble and use the MG-MICA multipurpose grid and accessories. In addition to descriptions of the MG-MICA grid's major components, this guide will show how the components work together with examples of common uses.

1. Safety, Regulatory, Inspection & Maintenance Information 4

2. The MICA GuideALink™ Rigging System 6

MICA GuideALinks 6

3. The MG-MICA Multipurpose Grid 8

Attaching the Grid Links 10
Front and Rear Positions 10

4. Using the MG-MICA Multipurpose Grid to Fly MICA™ Loudspeaker Arrays 11

MG-MICA Grid with MICA Loudspeakers in Forward Position for Maximum Downtilt 11
MG-MICA Grid with MICA Loudspeakers in Rearward Position for Maximum Uptilt 12
MG-MICA Pickup Configurations 13
Common Pickup Configurations Using Two Motors 13
Common Pickup Configurations Using One Motor 14
Load Ratings Overview 15
Prerequisite Conditions 15
Using MAPP Online Pro™ to Determine the Center of Gravity (COG) of the Array 17

5. Using the MG-MICA Grid to Ground-Stack MICA Loudspeaker Arrays 22

6. 600-HP Rigging 24

600-HP to 600-HP 25
Flown 600-HP to MICA 27
Ground-Stacked 600-HP to MICA 28

7. Using the MG-MICA with 600-HP Subwoofers 29

Flown Configuration 29
Ground-Stacked Configuration 29

8. Accessories for the MG-MICA Grid, MICA, and 600-HP 31

MGCP-MICA Center Point Rigging Beam 31
MGCP-MICA Installation Procedure 31
MTF-MILO/MICA Transition Frame 33
MDTL-MICA Downtilt Link 34
MDTL-MICA with MG-MICA Grid 34
MDTL-MICA with 600-HP 35
MCF-MICA Caster Frame 37
MCF-MICA for 600-HP 39

9. Assembling an Array of MICA Loudspeakers to the MG-MICA Grid 41

1. SAFETY, REGULATORY, INSPECTION & MAINTENANCE INFORMATION

Please read this Statement carefully and in its entirety. It contains important information regarding safety issues, including guidelines for general safe use of rigging systems as well as advisories on government regulations and liability laws.

SCOPE OF THIS MANUAL

Although this manual contains much useful information on rigging in general, it does not claim to be a comprehensive resource on the subject. This manual assumes that the owners and/or users of a QuickFly® system are knowledgeable and experienced in the areas of rigging and flying loudspeaker systems. MANY ISSUES OF CRUCIAL CONCERN, SUCH AS THE DETERMINATION OF APPROPRIATENESS AND CONDITION OF VENUE RIGGING POINTS, CANNOT BE ADDRESSED HERE. THEREFORE, THE USER MUST ASSUME ALL RESPONSIBILITY FOR THE APPROPRIATE USE OF QUICKFLY SYSTEMS IN ANY PARTICULAR LOCATION OR CIRCUMSTANCE.

The suspension of large, heavy objects in public places is subject to numerous laws and regulations at the national/federal, state/provincial, and local levels. This manual does not address the specifics of any such applicable laws and government regulations. This manual details procedures and practices consistent with those generally acknowledged as allowable and safe in the United States. However, the user must assume responsibility for making sure that use of any QuickFly system and its components in any particular circumstance or venue conforms to all applicable laws and regulations in force at the time.

LOAD RATINGS AND SPECIFICATIONS

Long-term safe operation is a central concern in the design and manufacture of any rigging/flying system. Meyer Sound has taken great care in material selection and component design. After manufacture, all load-critical system components are individually inspected.

All load ratings and other specifications given in this manual are the result of accepted engineering practice and careful testing. However, such specifications and ratings are subject to change. USERS SHOULD CHECK THE QUICKFLY SECTION OF THE MEYER SOUND WEB SITE AT

http://www.meyersound.com

OR CONTACT TECHNICAL SUPPORT AT REGULAR INTERVALS TO CHECK FOR UPDATED OR REVISED INFORMATION.

REGULATORY COMPLIANCE

The design and safe working load (SWL) ratings of the QuickFly system are intended to be in compliance with all known regulatory statutes currently applicable in the United States. Unless otherwise specified, all working loads are based on either a 5:1 or 7:1 safety factor. However, as noted above, there are wide variations internationally in the regulations and practices applying to suspension of sound systems in public places. Although regulations in the United States are generally among the most stringent, safety codes may be even stricter in a few localities (such as those highly prone to earthquakes). In addition, applicable safety codes are open to interpretation: Government officials in one location may have a stricter interpretation than another local official, even when operating under the same regulations and in the same legal jurisdiction.

CONSEQUENTLY, USERS OF QUICKFLY RIGGING SYSTEMS SHOULD BE PREPARED TO TAKE ADDITIONAL SAFETY ASSURANCE MEASURES BEYOND THOSE OUTLINED IN THIS MANUAL. IN ALL CASES, IT IS THE RESPONSIBILITY OF THE USER TO MAKE CERTAIN THAT ANY MEYER SOUND LOUDSPEAKER SYSTEM IS SUSPENDED IN ACCORDANCE WITH ALL APPLICABLE NATIONAL/FEDERAL, STATE/PROVINCIAL, AND LOCAL REGULATIONS.

SAFETY RESPONSIBILITIES “ABOVE THE HOOK”

In most touring applications of rigging systems, the touring sound provider is normally responsible for ensuring the safety of the suspension system only below the attachment point. The safety and suitability of the attachment point is generally seen as the responsibility of the venue owner or operator. However, this distinction (“above the hook” versus “below the hook”) can be open to interpretation. Touring system operators should double-check to make certain that attachment points are approved and suitably load rated, and that the points used are those identified as such by the venue owner or operator. AS AN EXTRA PRECAUTION, CAREFUL INSPECTION OF THE ATTACHMENT POINTS IS ADVISED BEFORE FLYING, PARTICULARLY IN OLDER VENUES OR THOSE HOSTING FREQUENT EVENTS USING LARGE SOUND AND LIGHTING SYSTEMS. In any case, Meyer Sound QuickFly systems are intended only for suspension from approved rigging points, each known to have ample SWL margins for the system components suspended below them.

INSPECTION AND MAINTENANCE

The Meyer Sound QuickFly systems are an assembly of mechanical devices, and are therefore subject to wear and tear over prolonged use, as well as damage from corrosive agents, extreme impact, or inappropriate use.

BECAUSE OF THE SAFETY ISSUES INVOLVED, USERS MUST ADOPT AND ADHERE TO A SCHEDULE OF REGULAR INSPECTION AND MAINTENANCE. IN TOURING APPLICATIONS, KEY COMPONENTS MUST BE INSPECTED BEFORE EACH USE. Such inspection includes examination of all load-bearing components for any sign of undue wear, twisting, buckling, cracking, rusting, or other corrosion. In regard to rust and corrosion, the main components of a QuickFly system are either protected by an exterior coating or made from stainless steel, which is impervious to rust and resistant to most corrosive fluids. Nevertheless, normal use and shipping vibrations can wear through the protective coatings, and extremely corrosive fluids (such as battery acid) can cause severe damage with prolonged exposure even to protected parts. Particular attention should be given to screws, bolts, and other fasteners to make certain the fittings are tight and secure. Metal seams and welds should be examined for any sign of separation or deformation. Meyer Sound strongly recommends that written documentation be maintained on each QuickFly system, noting date of inspection, name of inspector, points of system checked, and any anomalies discovered.

Annual Comprehensive Examination and Test Program

In addition to routine checks on the road for touring systems, Meyer Sound also recommends a careful, comprehensive system examination and testing “at home” in the warehouse or other appropriate location at regular intervals. Such at home examinations and tests should occur at least once a year, and should include a careful inspection of each component under ideal lighting conditions, and then a final comprehensive check of the entire system after it has been flown.

If any anomalies or defects are discovered that could possibly affect the safety or integrity of the system, affected parts or subsystems should be replaced in their entirety before that part of the system is flown again.

REPLACEMENT PARTS

Any component found to be defective, or any safety-related component you even suspect might be defective, should be replaced with the equivalent, approved part. Parts specific to a QuickFly system should be ordered directly from Meyer Sound. No attempt should be made to substitute what appears to be equivalent or “mostly the same” generic replacements. Some parts used in QuickFly systems are identical to those used in other rigging applications. To the best of our knowledge, most of these suppliers are reputable and their products are reliable. However, Meyer Sound has no way of assuring the quality of products made by these various suppliers. Therefore, Meyer Sound is not responsible for problems caused by components that were not supplied by Meyer Sound.

TRAINING

QuickFly systems are relatively straightforward and easy to use. However, they should only be used by persons trained in the use of loudspeaker rigging systems who have mastered key points of assembly, rigging and flying. Users should read this manual in its entirety before attempting to deploy any QuickFly system. You may make additional copies of this manual as necessary for in-house use; copies may not be made for any other purpose.

CAUTION: All Meyer Sound products must be used in accordance with local, state, federal and industry regulations. It is the owner’s and/or user’s responsibility to evaluate the reliability of any rigging method for their application. Rigging should be carried out only by experienced professionals.

CAUTION: Always use properly rated rigging hardware.

CAUTION: It is important to inspect rigging hardware regularly and replace worn or damaged components immediately.

2. THE MICA™ GUIDEALINK™ RIGGING SYSTEM

MICA loudspeakers feature Meyer Sound's QuickFly® rigging system with rugged, reliable and simple components. QuickFly facilitates deploying the loudspeakers in a variety of applications. MICA is designed to be rigged using professional components, and its custom front and rear GuideALinks rigidly couple the individual MICA enclosures for flying, stacking, or transporting in stacks while still in various splayed positions.

MICA GUIDEALINKS

MICA's captive QuickFly rigging hardware features rigid GuideALinks contained within recessed guides in the bottom front and rear corners of the enclosure. A slot and convenient pinned knob allow each link to be moved and pinned for arraying and storage. In normal use, the front links are used as the pivot point, and the splay between enclosures is introduced with the rear links.

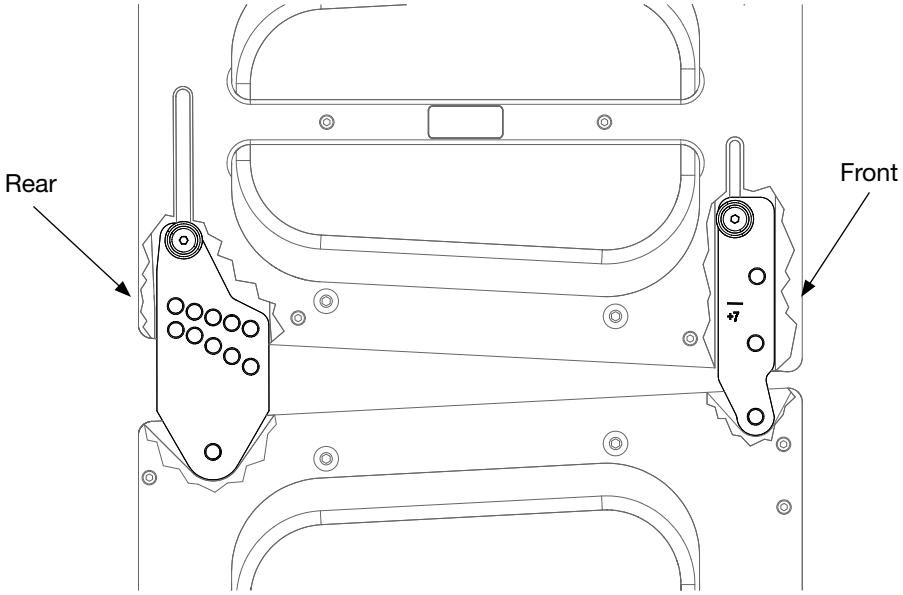

The MICA GuideALink (below left) has two rows with angles. The MICA frame includes engraved angles for the rear GuideALink (right). The rear links permit 10 splay angles between 0 and 6 degrees for optimum acoustical performance. These angles are: 0º, 0.5º, 1º, 1.5º, 2º, 2.5º, 3º, 4º, 5º, and 6º.

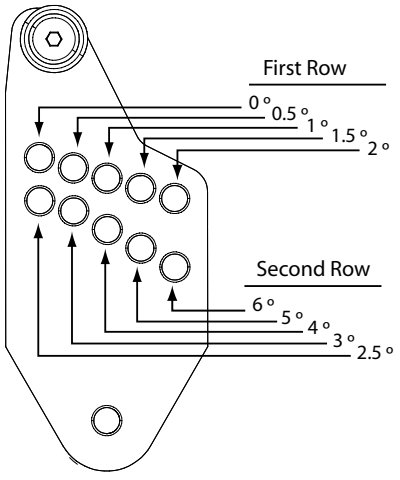

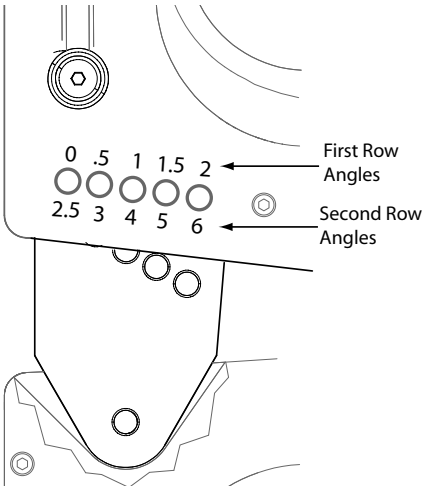

CAUTION: As part of the regular inspection and maintenance procedure for MICA loudspeakers, check each of the captive GuideALink pins to ensure that they are tight by turning them counterclockwise by hand. If a pin turns, it must be reset into the link using Loctite 290, and be allowed to cure for 48 hours and retested before the loudspeaker is flown.

The front links may be set in two different positions:

- 0°: This is the standard position (below left) and it is used to achieve splay angles between 0 and 6 degrees (adjusted on the rear) for optimal acoustical performance.
- 7°: This is the extended position (below right) to add 7 degrees to the angles set on the rear link. These extended angles (7 to 13 degrees) can be use to extend the coverage or to create a break in high frequencies of the array, for example, to miss balcony fronts and other architectural obstacles.

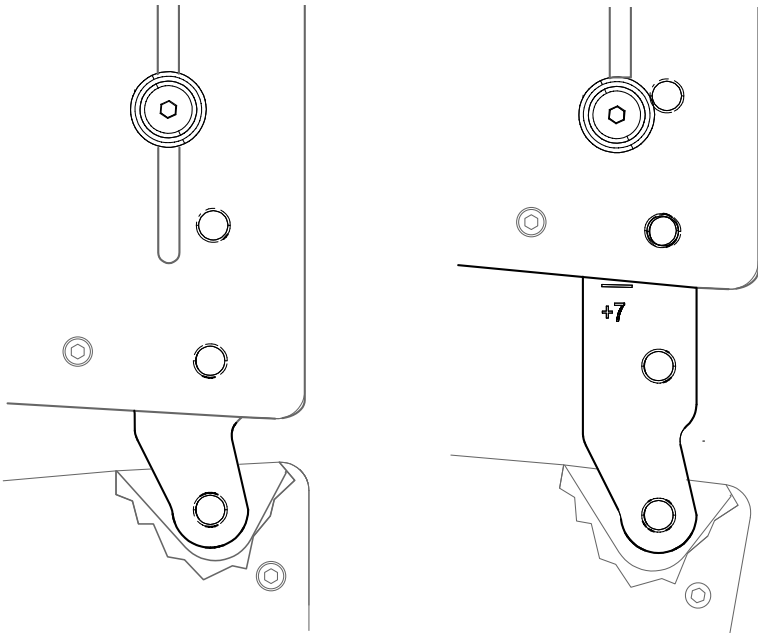

NOTE: Optimal acoustical performance for MICA is achieved by using angles between 0 and 6 degrees in a MICA array; use extended angles (7 to 13 degrees) with caution and only if necessary.

The rigid connections created by the QuickFly rigging hardware allow easy adjustment of the array tilt, often eliminating the need for pull-back straps in flown configurations.

NOTE: The numeric designations on the MICA rigging and the actual achieved angles are equivalent when one MICA loudspeaker is connected to another (for example, setting the front link at 0 and the rear link at 4 achieves a 4-degree downtilt of the lower enclosure relative to the upper). These are relative angles between the two enclosures. How they relate to the floor, stage, and seating angles in the venue depends on the orientation of the grid, the other angles already set by the loudspeakers in the array above them, whether they are used with the MG-MICA grid in a ground-stacked configuration, and other factors. Use MAPP Online Pro to determine the actual angles and coverage pattern of the array.

3. THE MG-MICA MULTIPURPOSE GRID

The MG-MICA multipurpose grid allows multiple MICA compact high-power curvilinear array loudspeakers to be flown or ground-supported in numerous configurations. In addition, the MG-MICA grid can be used with 600-HP subwoofers that have been fitted with MRF-600 rigging frames.

In flown configurations, the first MICA loudspeaker in the array is always connected to the MG-MICA grid at the 0° position. The up and down tilt of the MG-MICA and the complete array hung underneath can additionally be adjusted using chain motors, or differing lengths of steel or span set.

List of Contents: MG-MICA Multipurpose Grid Kit (Part # 40.147.034.01)
Required for use with MICA loudspeaker(s)

	Qty	Part Number	Description
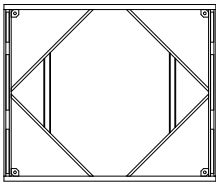	1	40.147.034.01	MG-MICA Multipurpose Grid
	2	61.147.040.01	MICA Grid Link Front
	2	61.147.042.01	MICA Grid Link Rear
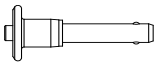	8	134.023	3/8" x 1.5" Quick-Release Pin (Red button and lanyard)
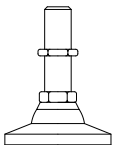	4	124.078	Leveling Foot

MG-MICA Multipurpose Grid Dimensions and Weight:

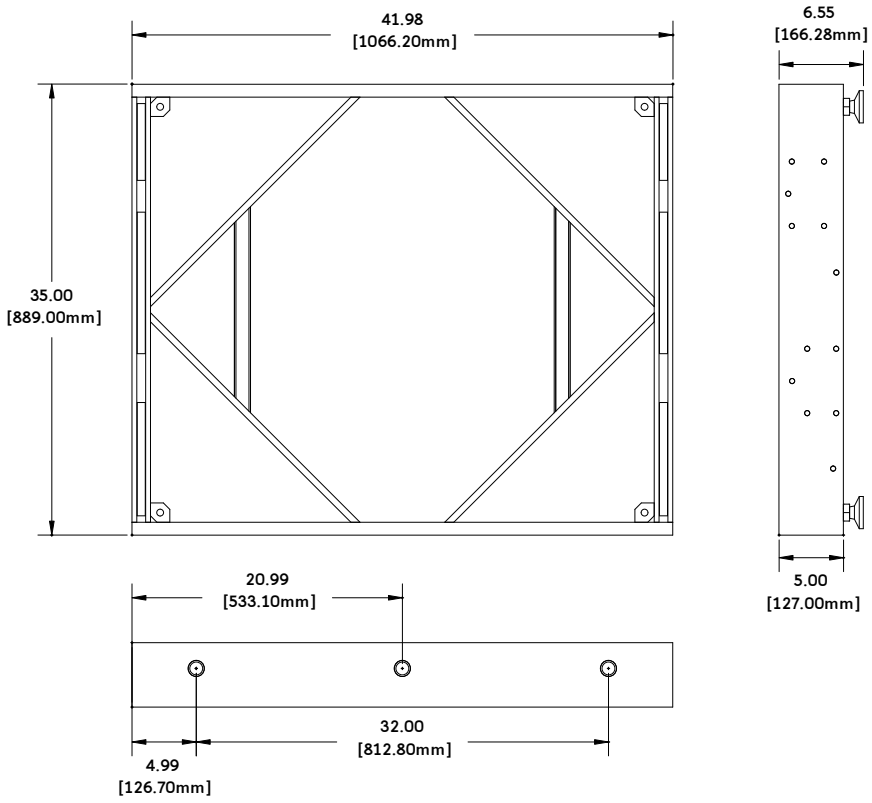

MG-MICA Multipurpose Grid Weight: 113.5 lbs (51.4 kg)

ATTACHING THE GRID LINKS

Please note that the front and rear links are different. The rear link is wider than the front.

Also, note that in the rear link the spacing between the two end holes and the center hole is not identical; the shorter distance should go up into the grid in order to pin correctly. The arrow stamped on the link indicates which way goes into the grid.

CAUTION: The front and rear grid links are of different widths, and should not be substituted for each other. The rear link is wider than the front.

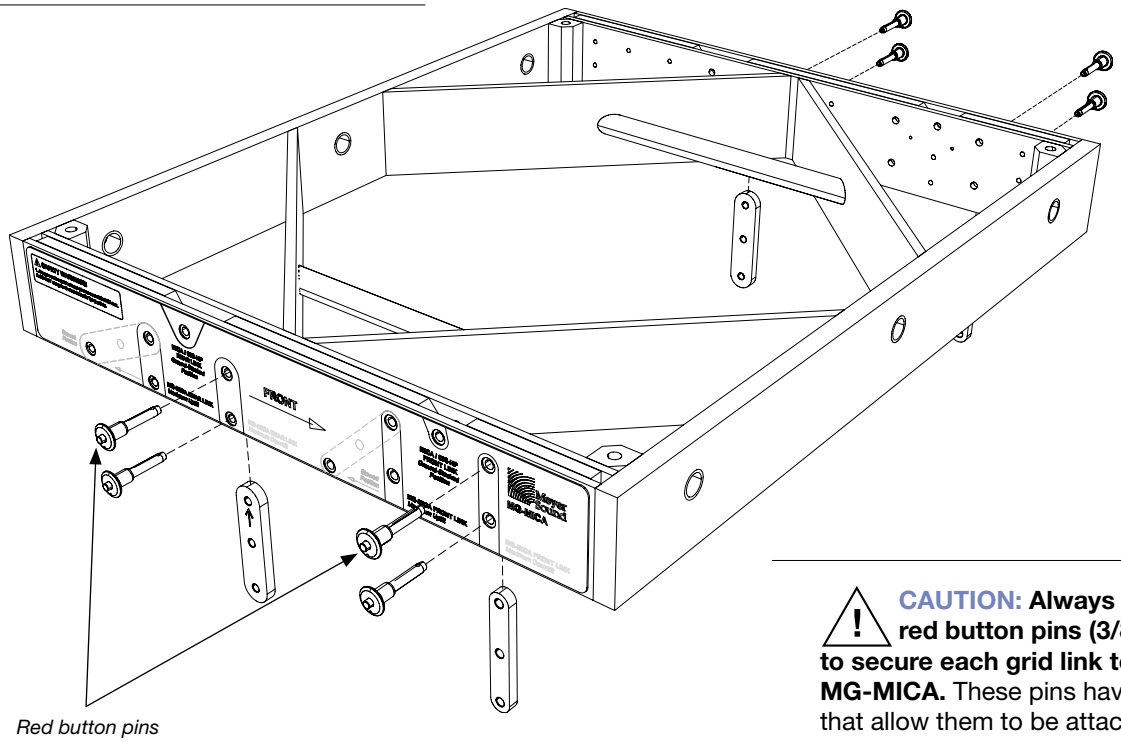

Red button pins

CAUTION: Always use two red button pins (3/8" x 1.5") to secure each grid link to the MG-MICA. These pins have lanyards that allow them to be attached to and remain with the MG-MICA grid. Avoid using the blue button pins (3/8" x 1.125") since they are shorter and will not lock in place.

FRONT AND REAR POSITIONS

The MG-MICA grid allows you to fly MICA loudspeakers in two positions with respect to the grid. Two sets of link positions are provided, labeled Front (and Rear) Link, Maximum Uptilt and Front (and Rear) Link, Maximum Downtilt. Select the appropriate set of holes on each side of the grid, and pin the front and rear grid links in place with two quick-release pins each.

Once the links are attached, they can remain with the grid as it is removed and transported in touring applications. By pulling the lower quick-release pins, the links can be rotated clockwise into the grid, and then re-pinned in the stowed position (when they are in the Maximum Uptilt position). Alternately, the grid can remain connected to the top MICA loudspeaker and be transported with that stack using the MCF-MICA caster frame.

4. USING THE MG-MICA MULTIPURPOSE GRID TO FLY MICA LOUDSPEAKER ARRAYS

MG-MICA GRID WITH MICA LOUDSPEAKERS IN FORWARD POSITION FOR MAXIMUM DOWNTILT

MICA loudspeakers can be connected to the MG-MICA grid in the “forward” position in order to obtain the maximum amount of downtilt for the array. The front and rear links are pinned to the grid on both sides in the positions labeled “MG-MICA FRONT LINK Maximum Downtilt” and “MG-MICA REAR LINK Maximum Downtilt”. The downtilt of the MG-MICA and the complete array hung underneath can be adjusted using chain motors, or differing lengths of steel or span set.

CAUTION: Always use two red button pins (3/8" x 1.5") to secure each grid link to the MG-MICA. Avoid using the blue button pins (3/8" x 1.125") since they are shorter and will not lock in place.

Follow the labeling on the grid to orient the loudspeakers; a large arrow on each side is labeled Front. Attach the top MICA enclosure to the grid links with one 3/8" x 1.125" quick-release pin (with blue release button; part #134.021) per link.

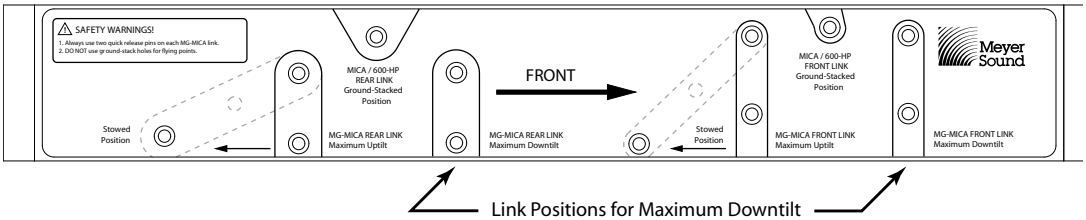

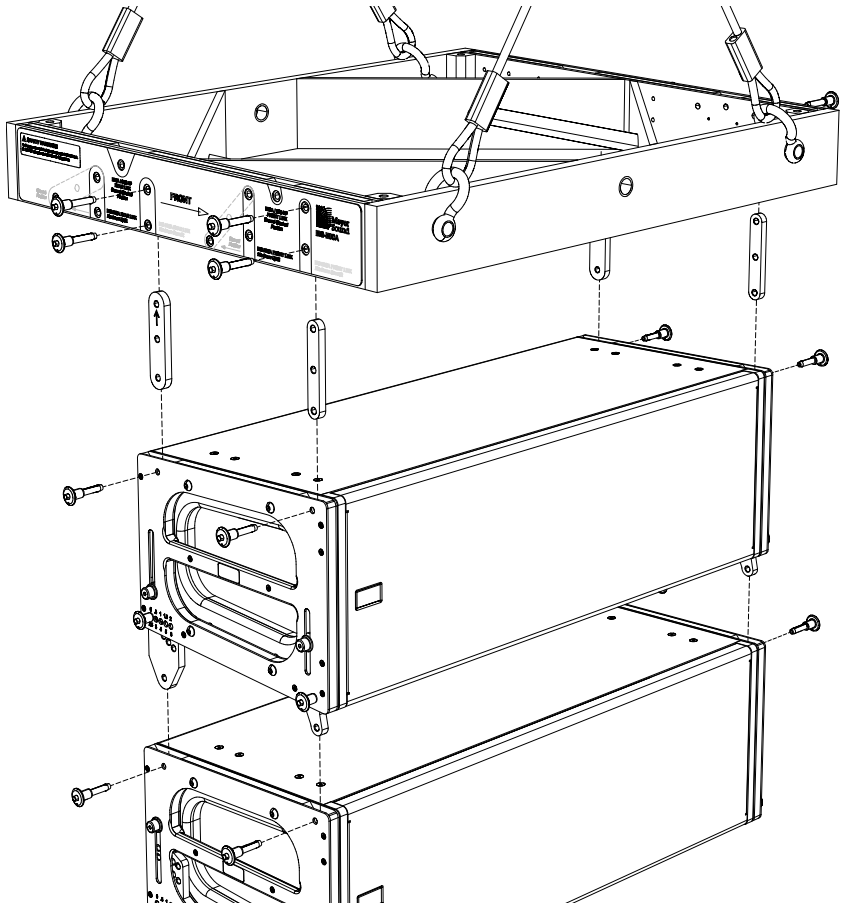

CAUTION: The front and rear grid links are of different widths, and should not be substituted for each other. The rear link is wider than the front.

CAUTION: The leveling feet must always be detached from the MG-MICA grid before flying a system. Unscrew the entire assembly, including the threaded leg, and remove completely.

MG-MICA GRID WITH MICA LOUDSPEAKERS IN REARWARD POSITION FOR MAXIMUM UPTILT

MICA loudspeakers can be connected to the MG-MICA grid in the “rearward” position in order to obtain the maximum amount of uptilt for the array. The front and rear links are pinned to the grid on both sides in the positions labeled “MG-MICA FRONT LINK Maximum Uptilt” and “MG-MICA REAR LINK Maximum Uptilt”. The uptilt of the MG-MICA and the complete array hung underneath can be adjusted using chain motors, or differing lengths of steel or span set.

Follow the labeling on the grid to orient the loudspeakers; a large arrow on each side is labeled Front. The first MICA is pinned to the grid at 0 degrees using the provided grid links.

CAUTION: Always use two 3/8" x 1.5" quick-release pins (with red release button; part #134.023) for each link in the provided holes.

Attach the top MICA enclosure to the grid links with one 3/8" x 1.125" quick-release pin (with blue release button; part #134.021) per link.

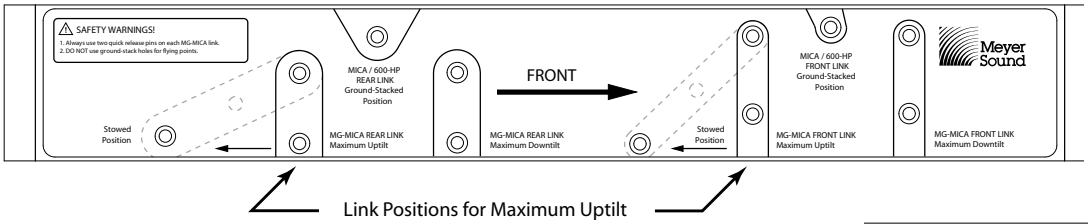

Link Positions for Maximum Uptilt

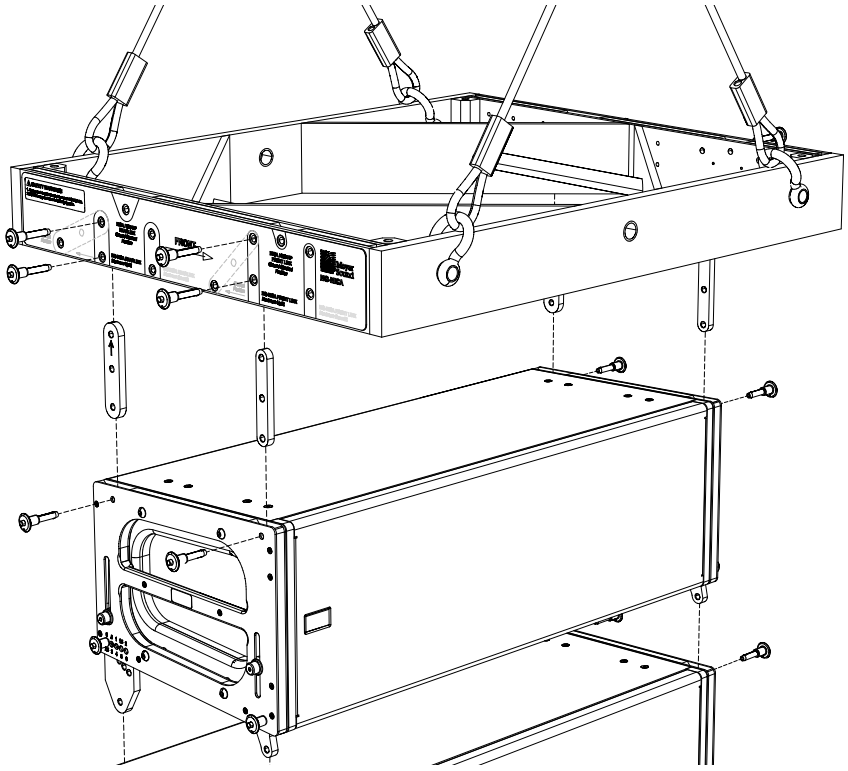

CAUTION: The front and rear grid links are of different widths, and should not be substituted for each other. The rear link is wider than the front.

TIP: When the links are inserted in the rear position they can be stowed inside the MG-MICA for transportation.

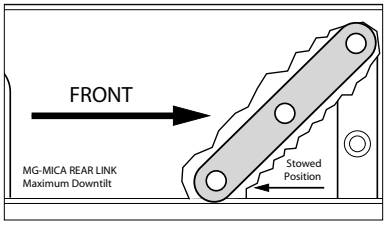

CAUTION: The leveling feet must always be detached from the MG-MICA grid before flying a system. Unscrew the entire assembly, including the threaded leg, and remove completely.

MG-MICA PICKUP CONFIGURATIONS

The MG-MICA grid can accommodate a variety of pick-up configurations using its six pickup points – three on each side of the grid. When possible it is recommended to use front and rear pick up points in order to be able to change the tilt of the grid and the array by using the front and rear motors.

NOTE: The design of the MG-MICA allows the use of any pickup configuration without affecting the load rating.

It is also possible to bridle between pickup points to give better stability to the grid compared to a single point per side.

CAUTION: If a bridle is used between pick-up points on the MG-MICA, the angle of the bridle at the apex should not be greater than 90 degrees to avoid increasing the load on the bridles and damaging the grid.

Common pickup configurations using two motors:

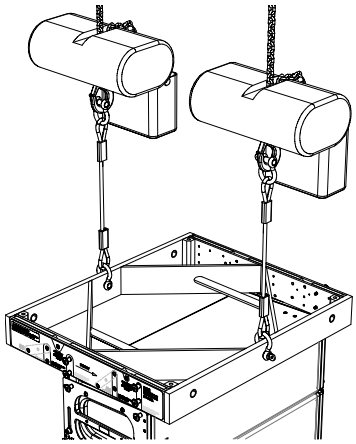

Figure 4.1. Two points, front and rear

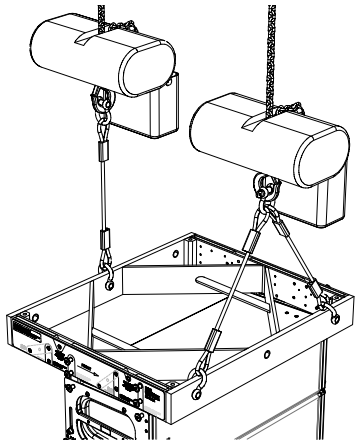

Figure 4.2. Three points, front bridle

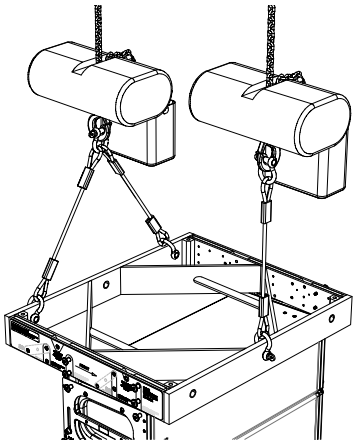

Figure 4.3. Three points, rear bridle

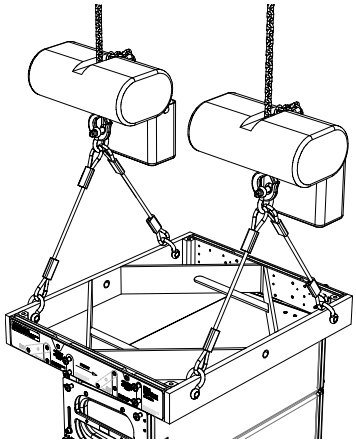

Figure 4.4. Four points, front and rear bridle

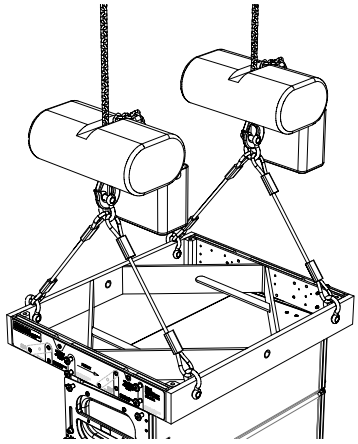

Figure 4.5. Four points, front and rear bridles on sides

CAUTION: Always use properly rated rigging hardware. The use of 3/4” shackles for the MG-MICA grid’s pick-up points is recommended.

In addition, the MG-MICA can be suspended from a single motor. However, limitations like the load rating of the motor and the pickup point in the ceiling “above the hook” need to be taken into consideration. Also, it becomes more difficult to change the tilt angle of the grid.

Common pickup configurations using one motor:

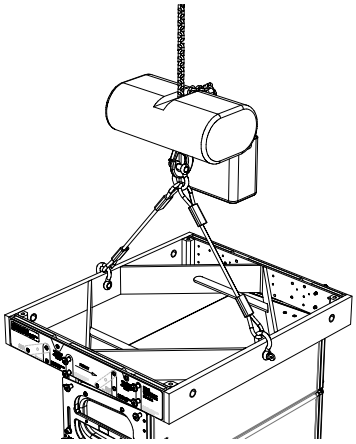

Figure 4.6. Single motor, center front and rear

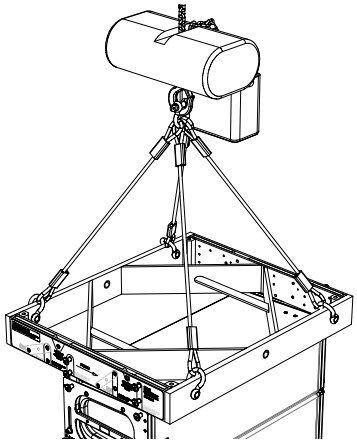

Figure 4.7. Single motor, to four corners

NOTE: The optional MGCP-MICA center point rigging beam can be installed on the MG-MICA multipurpose grid to allow single pick-up points to be used for rigging a MICA array. For more information please see the Accessories chapter in this guide.

LOAD RATINGS OVERVIEW

All of the load ratings in this assembly guide take the following into consideration:

Prerequisite Conditions

The following conditions must be met to achieve the load ratings shown in Tables 1, 2 and 3:

- Any combination of pick-up points can be used. If a bridle is used between pick-up points on the MG-MICA, the angle of the bridle at the apex is no greater than 90 degrees.
- The optional MGCP-MICA center point rigging beam is not used.
- The tilt of the grid must be no larger than the one achieved by the natural rotation of the array or the limit described in each table.
- The array is not pulled from points other than the ones on the MG-MICA grid and no pull-back motor should be used for tilting the array.
- The weight of the MG-MICA grid itself has not been included (unless it is noted). These tables rate the grid. For pick-up points and/or motors where the grid will be supported, the weight of the grid needs to be added – 113.5 lbs (51.4 kg).
- The maximum number of MICA loudspeakers that may be hung in each configuration is based on the MICA weight of 155 lbs (70.3 kg) to give some margin and/or allow the use of the optional rain hood with respect of the 150 lbs published specification.
- The load ratings and maximum weights allowed regard the MG-MICA grid and flown loudspeakers as a system, including links and pins. Thus, the maximum stress point could change from one element to another in the system.

CAUTION: Using a bridle leg shorter than the recommended length for each configuration will reduce the load rating and may damage the MG-MICA grid.

CAUTION: Always use properly rated rigging hardware. The use of 3/4" shackles for the MG-MICA grid's pick-up points is recommended.

With the use of transition accessories, you can also integrate other M Series loudspeakers, to form combined arrays.

CAUTION: The weight of any additional items hung with the array, such as downfill loudspeakers and transition accessories and cable, must be considered when calculating maximum load.

The load rating of the MG-MICA depends on two main factors:

- Where on the grid the center of gravity (COG) of the array underneath falls.
- The grid tilt angle.

The maximum grid tilt angle depends on whether the array is connected to the grid in the front flown or rear flown configuration.

Table 1. Basic Load Rating				
Factor of Safety	Front Flown Position		Rear Flown Position	
	FS5	FS7	FS5	FS7
Total Suspended Weight	2480 lbs (1,127 kg)	1860 lbs (845 kg)	2480 lbs (1,127 kg)	1860 lbs (845 kg)
MICA Equivalent Cabinets	16	12	16	12
Maximum Grid Tilt	-40° to +45°	-40° to +45°	-34° to +45°	-34° to +45°

NOTE: In order to achieve the ratings in Table 1, the following conditions need to be met:

- The grid tilt angle can not be greater than the angles in the table with respect to the horizontal. Negative angles are downtilt and positive angles are uptilt angles.
- The array is not pulled from points other than the ones on the MG-MICA grid.
- No pull-back motor is used for tilting the array.
- The optional MGCP-MICA center point rigging beam is not used.

NOTE: In order to achieve a higher load rating to be able to fly more loudspeakers, MAPP Online Pro must be used to find where the Center of Gravity is located within the grid. Please refer to next section about MAPP Online Pro and the Grid's Zones. Table 1 applies for Zone 1, 2 and 3.

USING MAPP ONLINE PRO TO DETERMINE THE CENTER OF GRAVITY (COG) OF THE ARRAY

MAPP Online Pro is a powerful acoustical prediction software that is an invaluable tool when designing a system. This software is a cross-platform, Java-based application for accurately predicting the coverage pattern, frequency response, impulse response, and maximum SPL output of single or arrayed Meyer Sound loudspeakers. MAPP Online Pro facilitates configuring arrays and, optionally, defines the environment in which they will operate — including air temperature, pressure, and humidity, as well as the location and composition of walls. You can find MAPP Online at:

www.meyersound.com/products

NOTE: In order to use MAPP Online Pro, you will need to register by clicking "Apply for MAPP Online" on the Web site listed above. After registration and upon approval, an e-mail will be sent to you with a user name and password along with the address for the Web site where you can download MAPP Online. Online instructions will guide you through the download and setup process.

In addition, MAPP Online Pro displays a wealth of information related to the rigging of the system:

- Location of the MICA's array center of gravity. This information is critical in the determination of the load rating of the MG-MICA.
- Total weight of the array.
- Distribution of the load on the front and rear points.
- Height and depth of the array.

Use the following procedures in MAPP Online Pro as you design the array and verify that it meets the conditions for the desired load ratings in Tables 2 and 3, on pages 19 and 20 of this document.

Once the MICA array has been designed from the acoustical point of view, the rigging information displayed on the "Insert Loudspeaker System" dialog box needs to be compared to the conditions in Tables 2 and 3. This will give information about whether the use of the grid under those conditions will meet the load rating and safety factor.

Please follow the next steps using MAPP Online Pro:

1. Open the dialog **Configure > Insert Loudspeaker System** and create the array below the MG-MICA grid. Select the MICA Forward or MICA Rearward grid position, depending on whether more downtilt or more uptilt is desired as a starting place. Insert the necessary quantity of loudspeakers, set the initial splay angles, and set the initial grid height and positioning. If necessary, consult the MAPP Online Pro manual for further information.
2. Change splay angles, grid angle and height until the design meets the acoustical requirements.
3. Depending on the array configuration, the Center of Gravity line will be passing through Zone 1 (Green), Zone 2 (Yellow), Zone 3 (Orange), or completely behind or in front of the grid. This information is displayed at the bottom of the Insert Loudspeaker System dialog box.
4. Consult Tables 2 and 3 to determine the maximum load (number of enclosures) permissible for a 5:1 or 7:1 safety factor for each zone.
5. If the conditions (Zone and tilt angle) are not met, the array configuration needs to be changed until the conditions are met.
6. Click the Select button, click on the array to select it, and then go to the Edit Loudspeaker System dialog. You can make changes to the splay angles, grid angle and trim height and configuration (front or rear) until the grid angle and COG falls in a zone needed to meet the load ratings needed for the particular design.

In order to give a visual representation and help to make modifications to the array's configuration, the COG and where it falls in the grid can be displayed in the sound field.

Please follow the next steps to see the COG graphically displayed::

1. If not active, Go to **View > Array COG** (Center of Gravity) and place a check mark next to it. You will see a magenta line that goes from the center of gravity of the array to the top of the sound field. Refer to Figure 4.8.
2. Click the Zoom button along the top right of the Sound Field, and left-click and hold while drawing a box around the top of the grid. You will see the three Zones marked in different colors Zone 1 (Green), Zone 2 (Yellow), Zone 3 (Orange). Refer to Figure 4.9.
3. As you change the splay and grid angle, check the results by zooming into the top of the grid and/or checking the zone information in Center of Gravity in the table at the bottom of Edit Loudspeaker System.

Repeat until the conditions needed to meet the load rating and safety factor requirements are met.

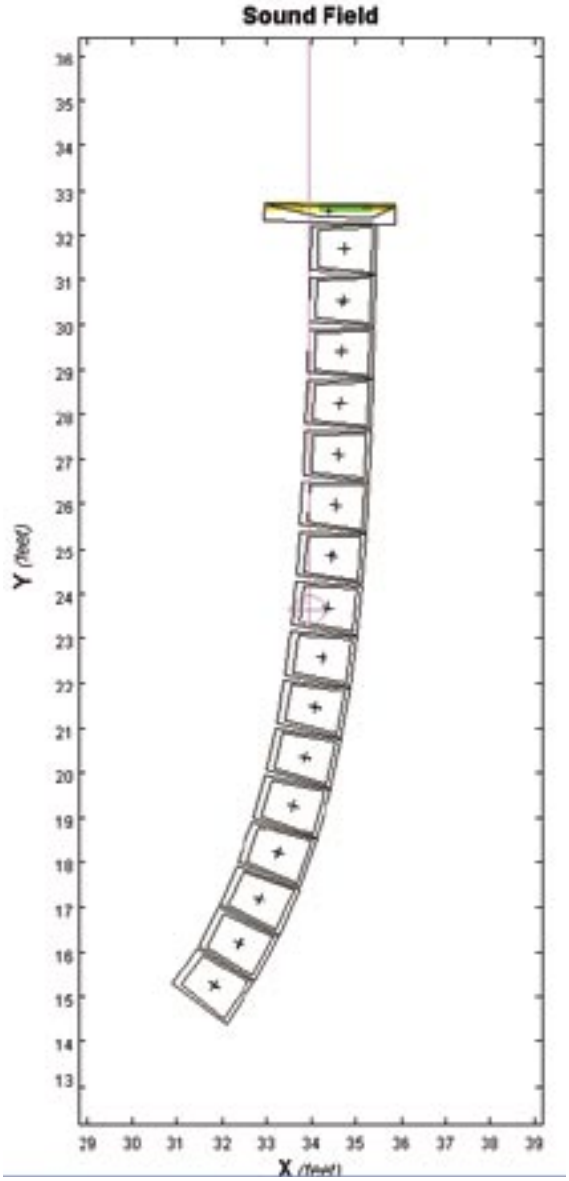

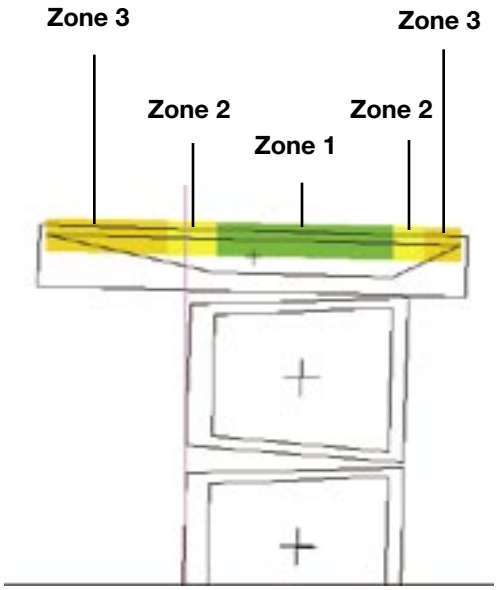

Figure 4.9. MG-MICA grid's zones (zoomed view)

Figure 4.8. Center of Gravity displayed on the sound field (vertical magenta line)

Table 2. Load Rating if Center of Gravity falls in Zone 2				
Factor of Safety	Front Flown Position		Rear Flown Position	
	FS5	FS7	FS5	FS7
Total Suspended Weight	3,355 lbs (1,522 kg)	2,580 lbs (1,170 kg)	3,355 lbs (1,522 kg)	2,580 lbs (1,170 kg)
MICA Equivalent Cabinets	21	16	21	16
Maximum Grid Tilt	-30° to +30°	-30° to +30°	-30° to +20°	-30° to +20°

NOTE: In order to achieve the ratings in Table 2, the following conditions need to be met:

- The grid tilt angle cannot be greater than the angles in the table with respect to the horizontal. Negative angles are downtilt and positive angles are uptilt angles.
- The array is not pulled from points other than the ones on the MG-MICA grid.
- No pull-back motor is used for tilting the array.
- The optional MGCP-MICA center point rigging beam is not used.
- The center of gravity of the array must be located in Zone 2 (or Zone 1). MAPP Online Pro must be used to find out this information.

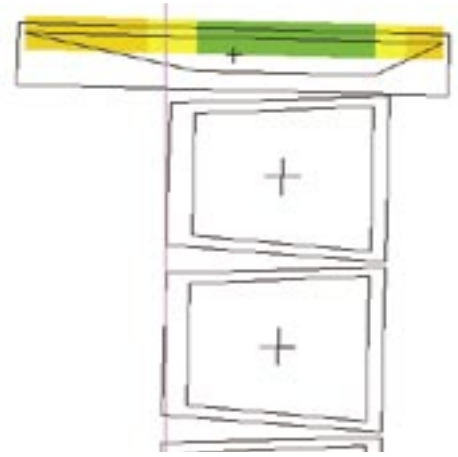

Figure 4.10. Example of a COG in Zone 2

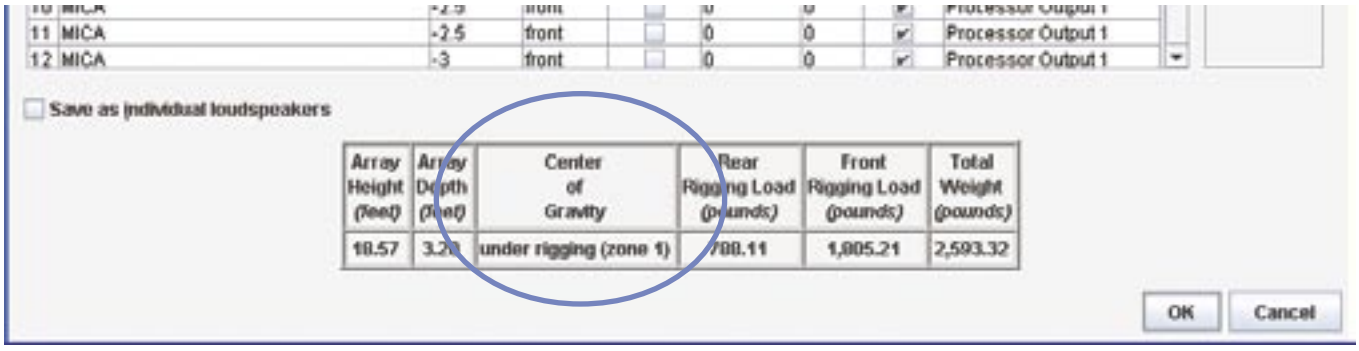

Figure 4.11. Zone 2 Center of Gravity in the Edit Loudspeaker Systems dialog

Table 3. Load Rating if Center of Gravity falls in Zone 1				
Factor of Safety	Front Flown Position		Rear Flown Position	
	FS5	FS7	FS5	FS7
Total Suspended Weight	3875 lbs (1,761 kg)	3410 lbs (1550 kg)	3875 lbs (1,761 kg)	3410 lbs (1550 kg)
MICA Equivalent Cabinets	25	22	25	22
Maximum Grid Tilt	-4° to +4°	-4° to +4°	-4° to +4°	-4° to +4°

NOTE: In order to achieve the ratings in Table 3 (25 MICA loudspeakers with a 5:1 safety factor or 22 MICA loudspeakers with a 7:1 safety factor), the following conditions need to be met:

- The grid tilt angle cannot be greater than the angles in the table with respect to the horizontal. Negative angles are downtilt and positive angles are uptilt angles.
- The array is not pulled from points other than the ones on the MG-MICA grid.
- No pull-back motor is used for tilting the array.
- The optional MGCP-MICA center point rigging beam is not used.
- The center of gravity of the array must be located in Zone 1. MAPP Online Pro must be used to find out this information.
  OR
  Loads must be monitored using load cell sensors to show that the total rigging load at the front or rear of the grid does not exceed 2541 lbs (1155 kg) for 5:1 safety factor or 1815 lbs (825 kg) for 7:1 safety factor.

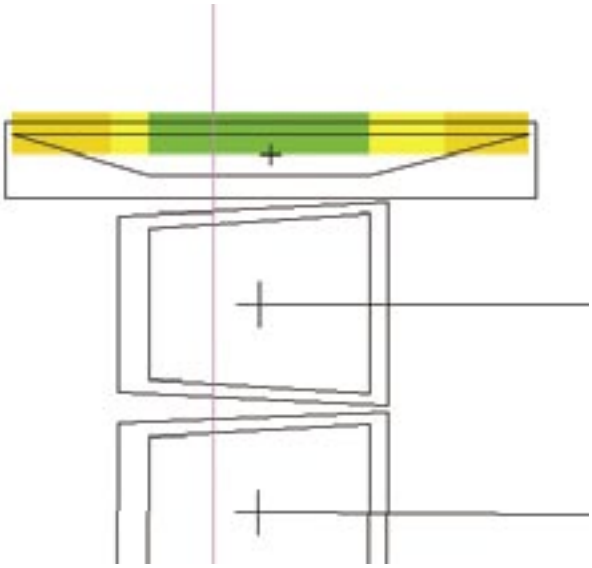

Figure 4.12. Example of a COG in Zone 1

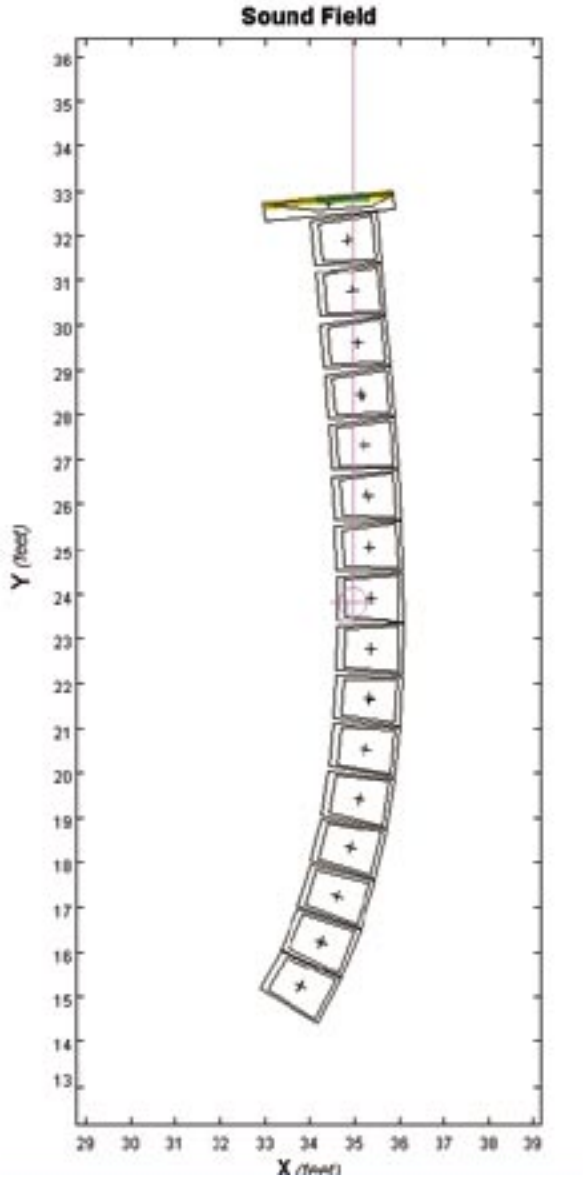

Figure 4.13. Zone 1 COG showing array

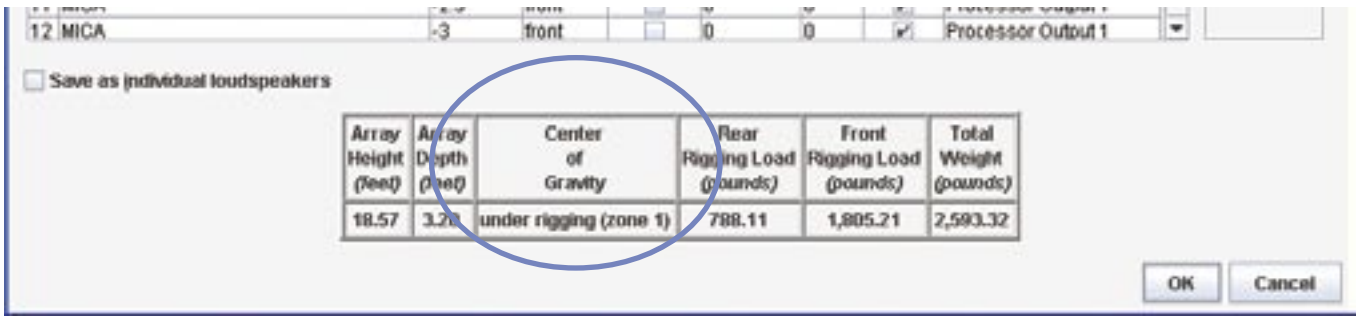

Figure 4.14. Zone 1 Center of Gravity in the Edit Loudspeaker Systems dialog

5. USING THE MG-MICA GRID TO GROUND-STACK MICA LOUDSPEAKER ARRAYS

In addition to its suspending capabilities, the MG-MICA grid forms a secure base for ground-stacking when the leveling feet are installed. For ground-stacking, secure the GuideALinks in the bottom MICA enclosure to the MG-MICA grid using the red button 3/8" x 1.5" quick-release pins.

Use the link positions in the grid marked MICA / 600-HP Front Link Ground-Stacked Position and MICA / 600-HP Rear Link Ground-Stacked Position. Pin additional MICA loudspeakers at the desired splay angles to form the array.

NOTE: Up to six (6) MICA loudspeakers can be easily ground-stacked on the MG-MICA grid. Because of the increased difficulty of stacking more than this quantity, as well as for safety reasons, avoid ground-stacking more than six MICA loudspeakers.

When the MICA loudspeaker is pinned directly to the MG-MICA grid, 10 positions from -2.5 to 3.5 degrees with respect of the grid can be achieved with the use of the positions on the rear GuideALink. This is due to an offset of -2.5 degrees from the position number since the grid is flat. Refer to Table 4 on page 23.

CAUTION: To further secure larger ground-stacked arrays, particularly in outdoor situations, use a tie down or weight on the grid and/or a safety system on the array.

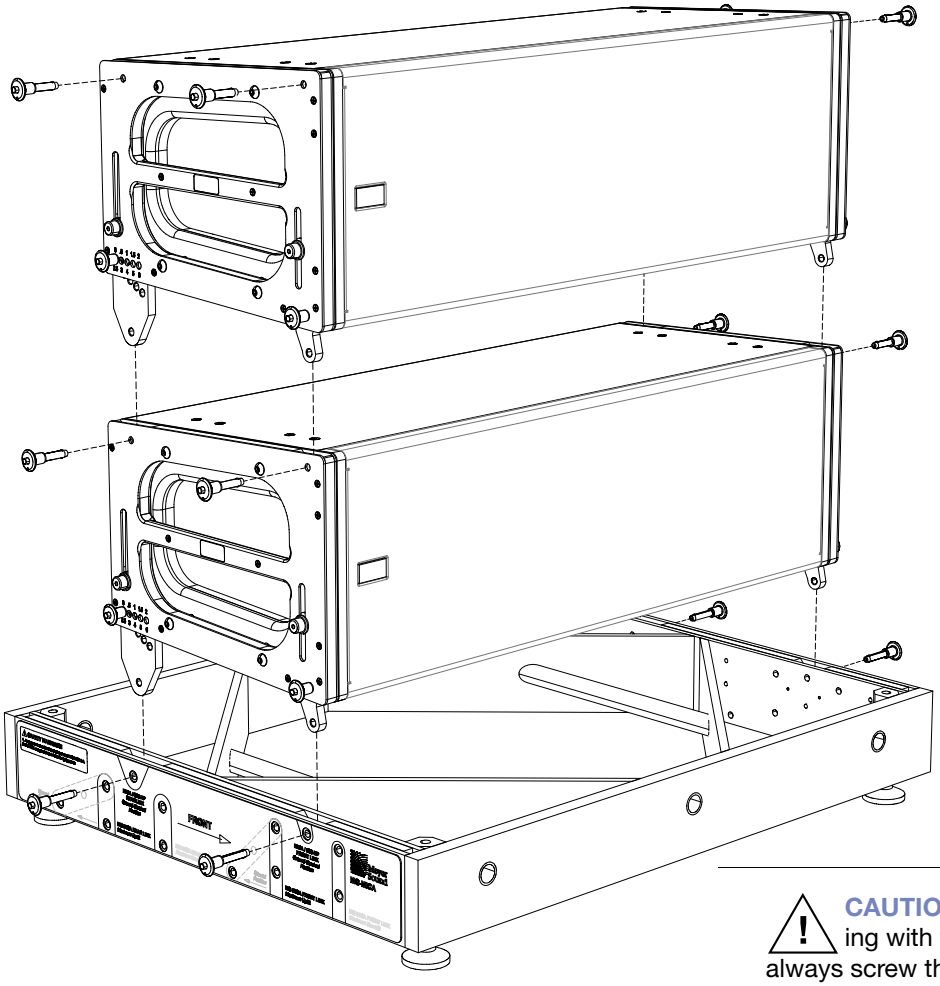

CAUTION: When ground-stacking with the MG-MICA grid, always screw the four provided leveling feet (part #124.878) into the four corners.

Table 4. MICA Link Positions to MG-MICA (ground-stacked)		
Rear	Front	Angle for MICA*
0	0	-2.5°
0.5	0	-2°
1	0	-1.5°
1.5	0	-1°
2	0	-0.5°
2.5	0	0°
3	0	+0.5°
4	0	+1.5°
5	0	+2.5°
6	0	+3.5°

*Negative angles are downtilt and positive angles are uptilt angles relative to the grid.

NOTE: The optional MDTL-MICA downtilt link can be used between the MG-MICA grid and the first MICA in the ground stacked array to add a fixed amount of downtilt to the first MICA and the array. For more information please see the Accessories chapter in this guide.

6. 600-HP RIGGING

600-HP subwoofers equipped with the optional MRF-600 rigging frame can be linked directly to the MG-MICA grid and to MICA loudspeakers to form flown and ground-stacked arrays.

The 600-HP's captive QuickFly rigging hardware – like MICA's – features rigid GuideALinks contained within recessed guides in the bottom front and rear corners of the enclosure. A slot and convenient pinned knob allow each link to be moved and pinned for arraying and storage. In normal use, the front links are used as the pivot point, and the splay between enclosures is introduced with the rear links.

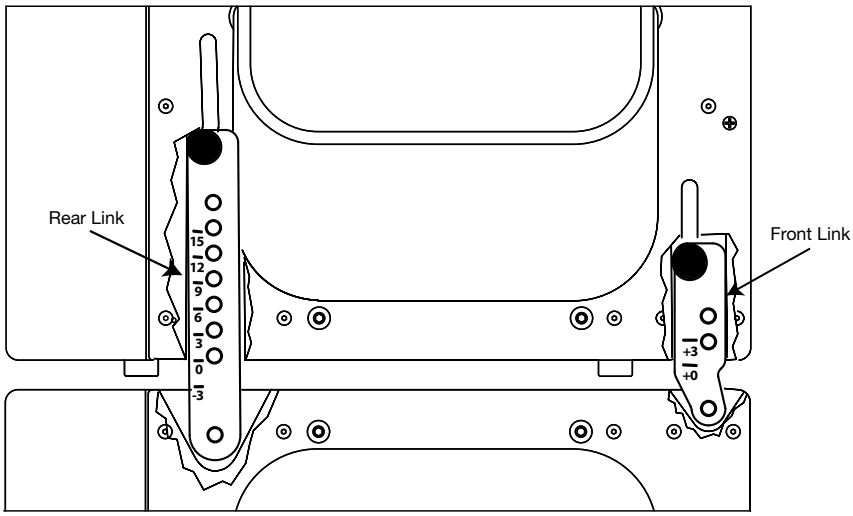

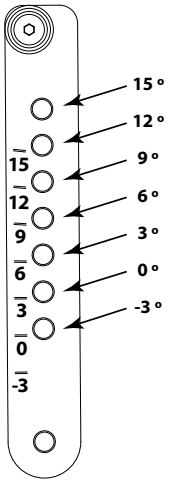

The rear links provide seven positions, marked -3, 0, 3, 6, 9, 12, and 15. The resulting angle these link positions represent depends on whether the 600-HP is linked to another 600-HP or to a MICA loudspeaker.

CAUTION: As part of the regular inspection and maintenance procedure for 600-HP loudspeakers, check each of the captive GuideALink pins to ensure that they are tight by turning them counterclockwise by hand. If a pin turns, it must be reset into the link using Loctite 290, and be allowed to cure for 48 hours and retested before the loudspeaker is flown.

The front links may be set in two different positions:

- 0°: This is the standard position (left figure) and it is used to achieve a 0-degree angle between adjacent 600-HP enclosures.
- +3°: The main purpose for this extended position (right figure) is to curve a 600-HP stand-alone array that is flown next to a MICA array, both for appearance and to keep the subwoofer array from blocking the horizontal high-frequency coverage from the MICA enclosures lower in the array.

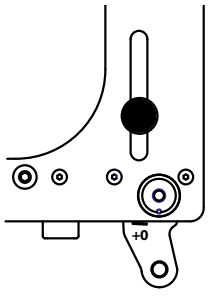

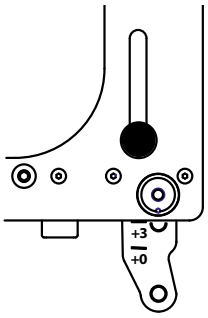

RIGGING CONFIGURATIONS AND TILT ANGLES

The resulting angle from the positioning of the front and rear links depends on whether they are being used to link to other 600-HP subwoofers or to MICA array loudspeakers.

600-HP to 600-HP

Flown

When 600-HPs are flown, the GuideALinks allow a variety of combinations. However, the most common is at 0 degrees. In addition, when flown it is possible to achieve to a 3-degree downtilt to curve a 600-HP stand-alone array that is flown next to a MICA array, both for appearance and to keep the subwoofer array from blocking the horizontal high-frequency coverage from the MICA enclosures lower in the array.

Table 5. 600-HP Link Positions to 600-HP (flown)

Rear	Front	Angle for 600-HP below
0	0	0°
0	+3	3° Downtilt

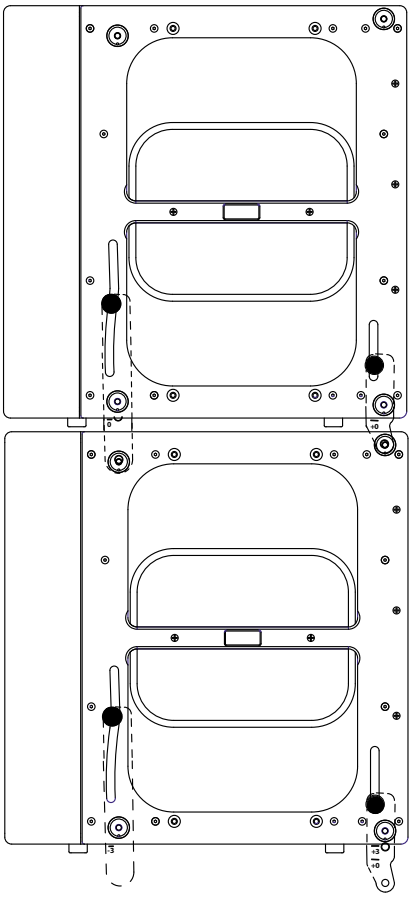

Figure 6.1. 600-HP at 0 degrees

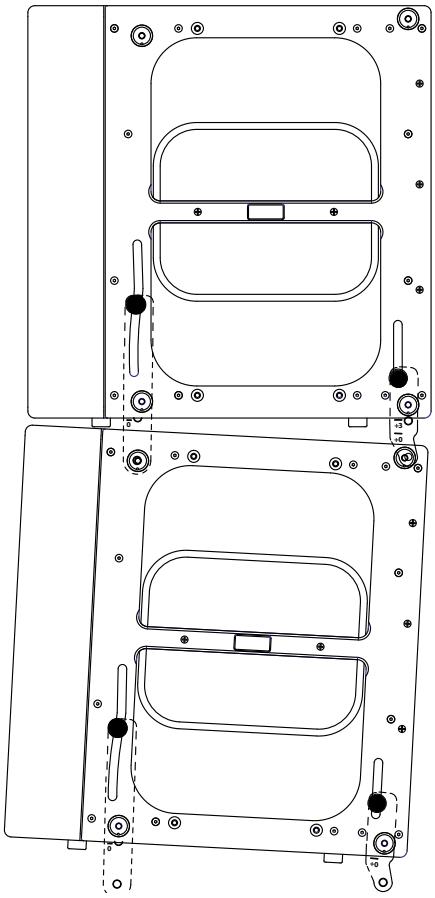

Figure 6.2. 600-HP at -3 degrees

NOTE: Not all mechanically possible combinations between two 600-HP are useful — for example, concave angles between two subs. These combinations are possible because the 600-HP rigging was designed to also allow a wide number of combinations between 600-HP when flown or ground-stacked with MICA loudspeakers.

Ground-stacked

When 600-HPs are ground-stacked, the GuideALinks allow a variety of combinations. However, the most common is at 0 degrees. In addition, it is possible when ground-stacked to achieve to a 3-degree uptilt to curve a 600-HP stand-alone array for purposes of appearance.

Table 6. 600-HP Link Positions to 600-HP (ground-stacked)

Rear	Front	Angle for 600-HP below
0	0	0°
0	+3	3° Uptilt

600-HP to MICA

Flown

MICA and 600-HP loudspeakers can be combined within the same array to supplement and extend low-frequency headroom in the system. The rigging on both models is completely compatible. When flown, the 600-HP subwoofers are typically positioned at the top, and linked to the MICA with an uptilt or downtilt as needed to meet the requirements of the installation.

This rigging capability allows all of the 600-HPs to be positioned at 0 degrees in relation to each other and to the MG-MICA grid, while introducing the desired angle to the MICA array using the GuideALinks on the lowest 600-HP enclosure — without needing to adjust the angle of the remaining 600-HPs or the MG-MICA grid.

Table 7. 600-HP Link Positions to MICA (flown)

Rear	Front	Angle for MICA below
-3	+3	6° Downtilt
0	+3	3° Downtilt
0	0	0°
3	0	3° Uptilt
6	0	6° Uptilt
9	0	9° Uptilt
12	0	12° Uptilt
15	0	15° Uptilt

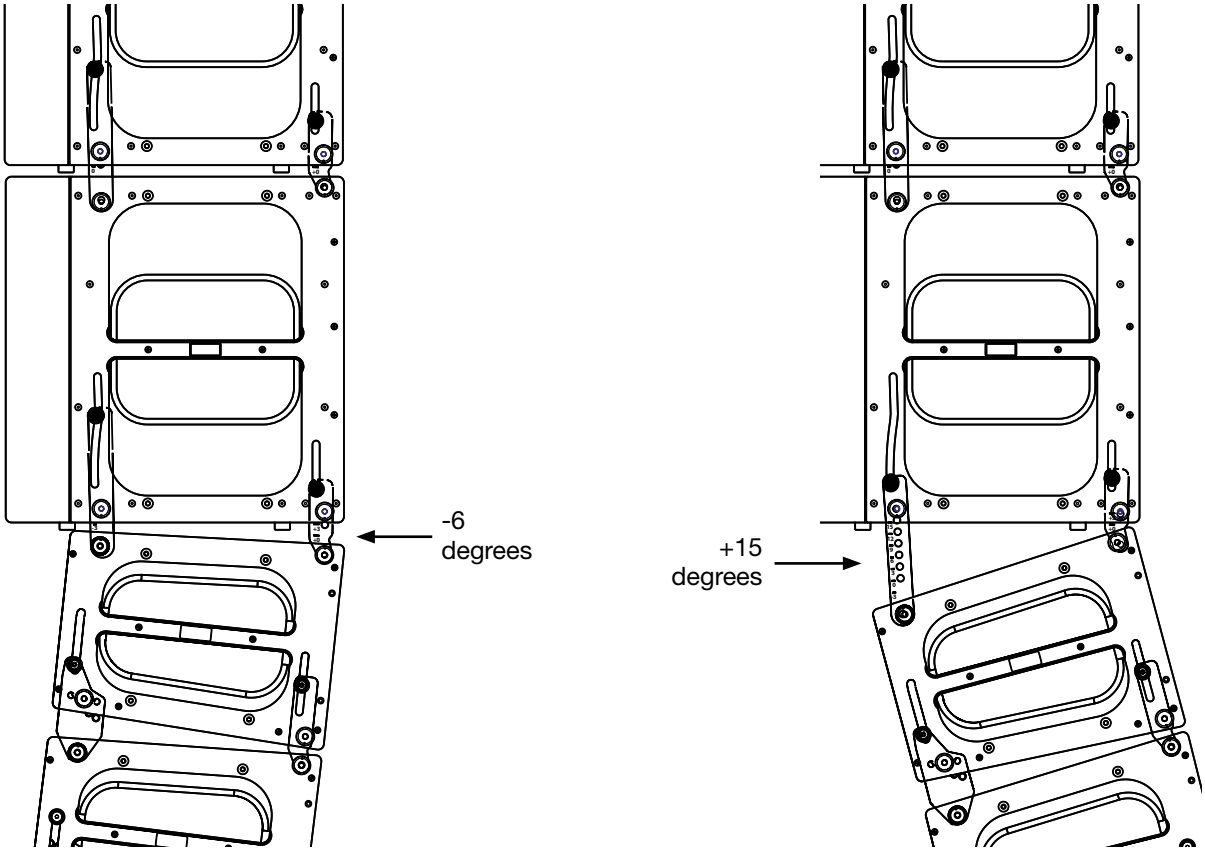

Figure 6.3. 600-HP to MICA flown configuration maximum angles

600-HP to MICA

Ground-stacked

When MICAs are ground-stacked above the 600-HP, the GuideALinks in MICA allow the same combinations as when a MICA is linked with another MICA but it will create uptilt instead of downtilt. The use of the +7 position on the front GuideALink is not recommended.

Table 8. MICA Link Positions to 600-HP (ground-stacked)

Rear	Front	Angle for MICA
0	0	0°
0.5	0	0.5° Uptilt
1	0	1° Uptilt
1.5	0	1.5° Uptilt
2	0	2° Uptilt
2.5	0	2.5° Uptilt
3	0	3° Uptilt
4	0	4° Uptilt
5	0	5° Uptilt
6	0	6° Uptilt

NOTE: The optional MDTL-MICA Downtilt Link can be used between the top 600-HP and the first MICA in the ground-stacked array to add a fixed amount of downtilt to the MICA section. For more information, please see the Accessories chapter in this guide.

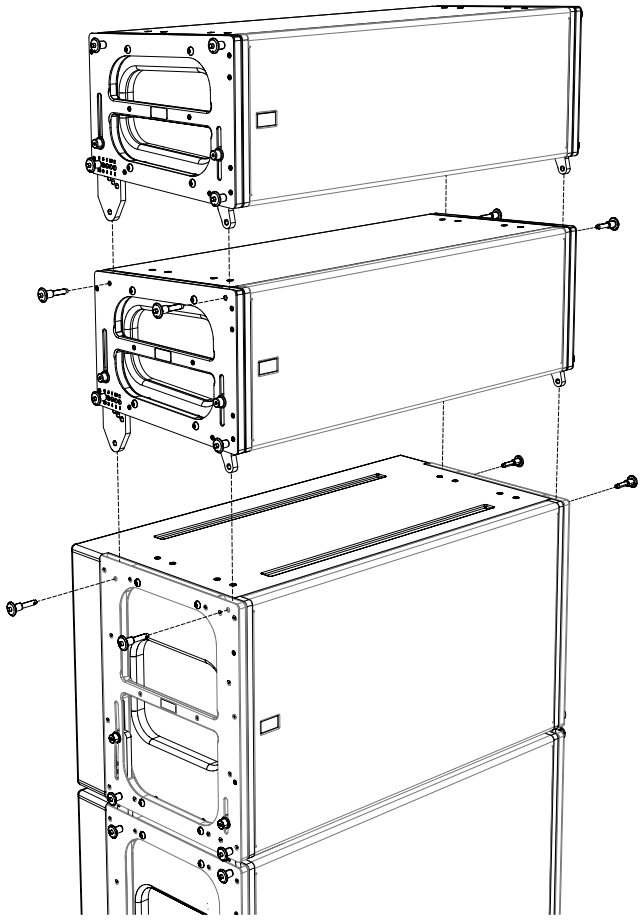

7. USING THE MG-MICA WITH 600-HP SUBWOOFERS

600-HP subwoofers equipped with the optional MRF-600 rigging frame can be linked directly to the MG-MICA grid to form flown and ground-stacked arrays.

FLOWN CONFIGURATION

The 600-HP rigging frame receives the MG-MICA grid links exactly the same way as MICA. For complete information on front and rear configurations as well as load ratings please refer in this manual to the load ratings overview and center-of-gravity tables in the second half of Section 4, and to Section 6 for 600-HP rigging.

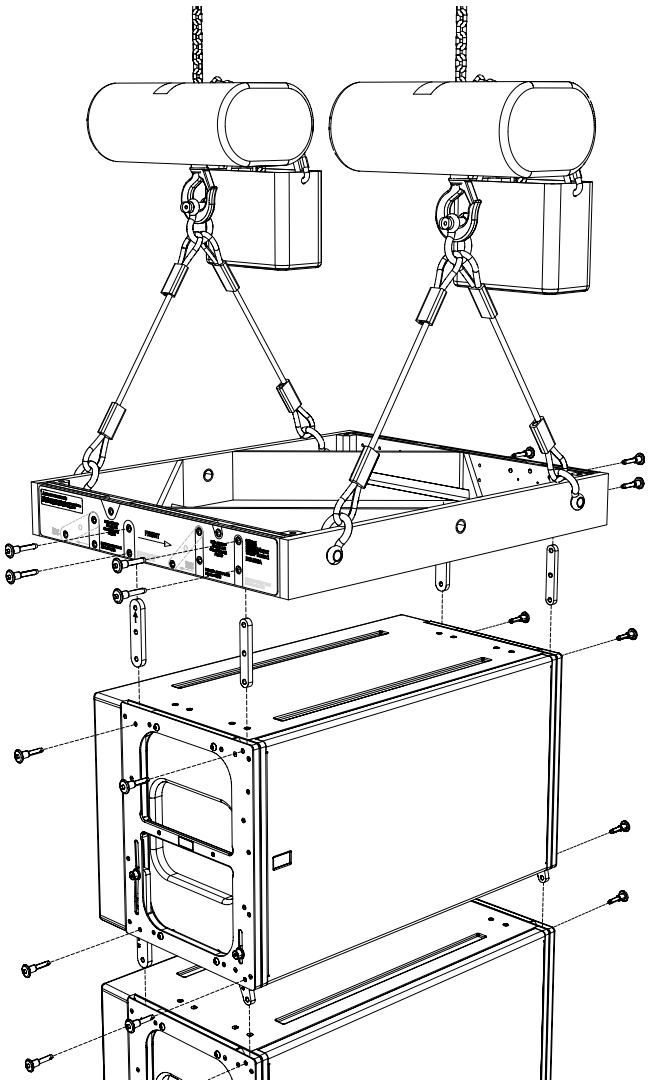

CAUTION: The weight of the 600-HP fitted with rigging is 215 lbs (97.52 kg). Never exceed the load rating of the MG-MICA grid.

GROUND-STACKED CONFIGURATION

The MG-MICA ground-stacked pockets receive the 600-HP links directly. Many combinations are possible; the most common are listed in the table below.

Table 9. 600-HP LInk Positions to MG-MICA Grid (ground-stacked)

Rear	Front	Angle for 600-HP with respect to the MG-MICA
-3	0	0.5° Uptilt
0	0	2.5 ° Downtilt
0	+3	0.5° Uptilt

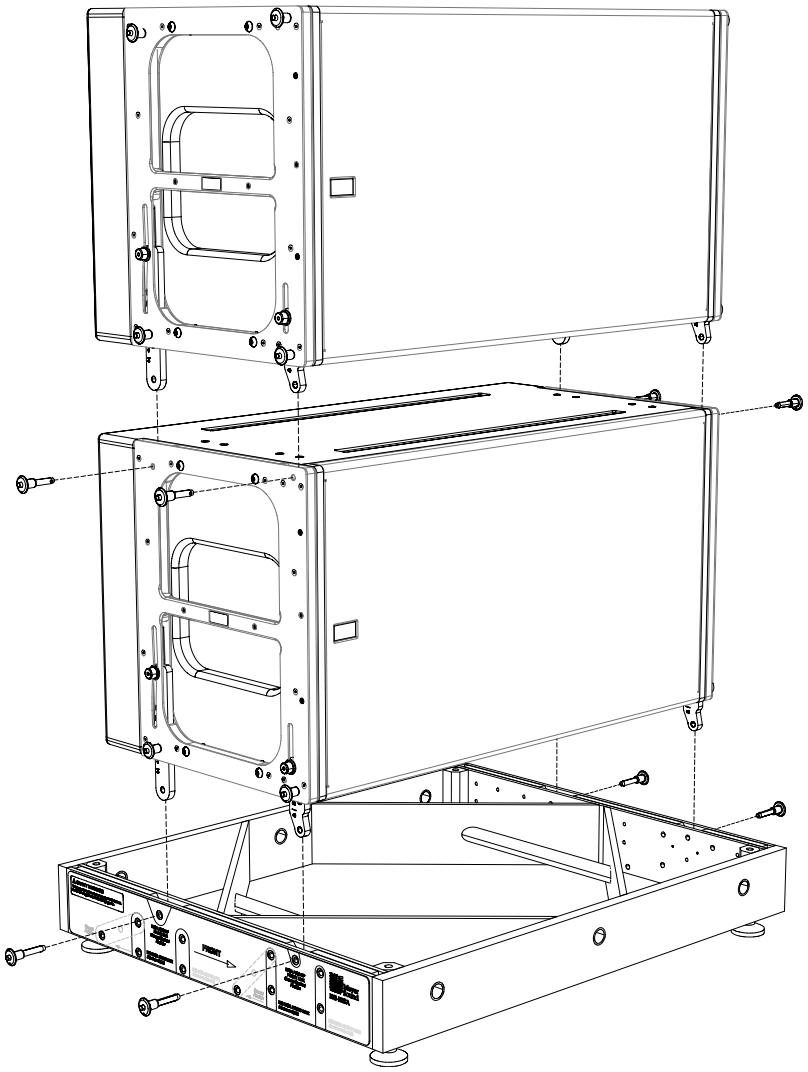

8. ACCESSORIES FOR THE MG-MICA GRID, MICA, AND 600-HP

MGCP-MICA CENTER POINT RIGGING BEAM

CAUTION: When the MGCP-MICA Center Point Rigging Beam is used to pick up the MG-MICA grid use only the ratings on table 10 (page 32). Do not use the ratings for the MG-MICA grid on previous pages which are rated for the grid's own pick-up points.

The optional MGCP-MICA center point rigging beam can be installed on the MG-MICA multipurpose grid to allow single pick-up points to be used for rigging a MICA array.

List of Contents: MGCP-MICA Center Point Rigging Beam Kit (40.147.050.01)			
	Qty	**Part Number**	**Description**
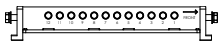	1	40.147.050.01	MGCP-MICA Assembly
	2	101.277	1-8 x 2.25" Hex Head Screws
	2	113.036	2" Flat Washer
	3	66.147.050.01	MGCP-MICA Shims
	2	116.026	1.6" Lock Washer

MGCP-MICA Installation Procedure

The MGCP-MICA can easily be installed in the field with the following steps:

1. Using an adjustable crescent wrench or similar, remove each of the two 1-8 x 2.25" hex head bolts and washers from the beam.
2. The orientation of the MGCP-MICA is critical to the correct operation. Position the beam as shown below, so that the "L" angles are on the bottom part of the MG-MICA grid. Make sure that the "Front" arrow on the MGCP-MICA is pointed in the same direction as the "Front" arrow on the MG-MICA grid, so that the numbering on the beam will be in the correct orientation. Use shims as needed to take up any space between the beam and the grid.
3. Thread each of the bolts through the holes in the beam and into the MG-MICA grid. Make sure the washers are placed as shown in the figure below.
4. Tighten the bolts securely.

CAUTION: Ensure that the bolts are firmly secure. Approximately 15 foot pounds of torque is recommended.

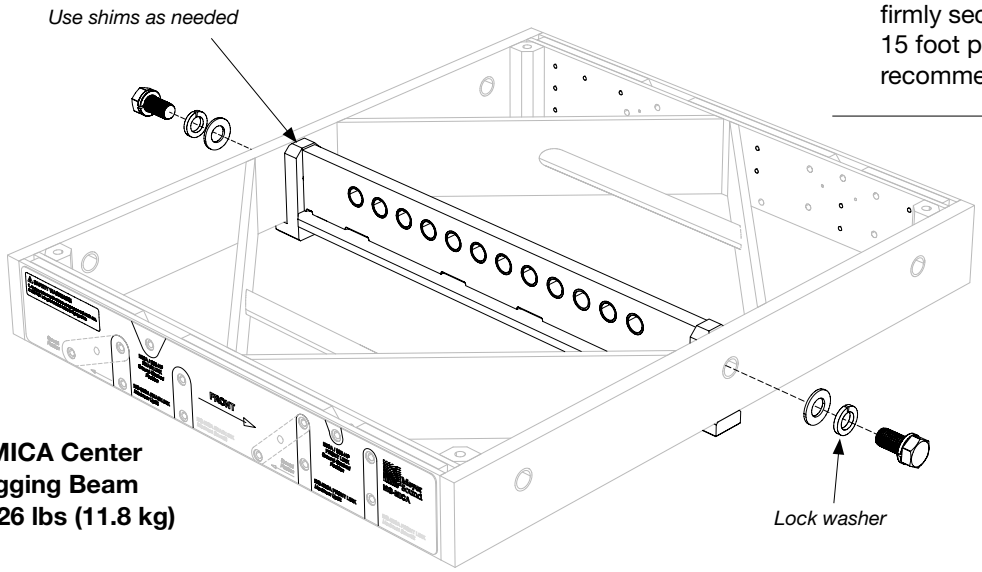

MGCP-MICA Center Point Rigging Beam Weight: 26 lbs (11.8 kg)

Table 10. MGCP-MICA Load Ratings		
Factor of Safety	FS5	FS7
Total Suspended Weight	1830 lbs (836 kg)	1365 lbs (621 kg)
MICA Equivalent Cabinets*	11	8
Maximum Grid Tilt	-45° to +45°	-45° to +45°

*The load rating includes the MG-MICA grid.

CAUTION: Do not exceed the maximum rated weight for the MGCP-MICA Center Point Rigging Beam when it is used to pick up the MG-MICA grid. The ratings in Table 10 should be used instead of the MG-MICA load ratings, which are rated for the grid's own pick-up points.

CAUTION: Make sure that the single suspension point in the venue is rated for the load of the entire suspended array, including the loudspeakers, grid, rigging beam, and other attached connections and accessories.

Using the Center of Gravity feature in MAPP Online Pro makes very simple to determine the pick-up hole in the MGCP-MICA when installed in the MG-MICA grid. Please follow the next steps using MAPP Online Pro:

1. Open the dialog **Configure > Insert Loudspeaker System** and create the array below the MG-MICA grid. Select the MICA Forward or MICA Rearward grid position with MGCP, depending on whether more downtilt or more uptilt is desired as a starting place. Insert the necessary quantity of loudspeakers up to the load rating on Table 10, set the initial splay angles, and set the initial grid height and positioning.
2. Change splay angles, grid angle and height until the design meets the acoustical requirements.
3. If not active, go to **View > Array COG** (Center of Gravity) and place a check mark next to it. You will see a magenta line that goes from the center of gravity of the array to the top of the sound field.
4. Click the Zoom button along the top right of the Sound Field, and left-click and hold while drawing a box around the top of the grid.
5. You will see the center of gravity line and the pick-up holes on the MGCP-MICA. Select the closest hole to the line. Refer to Figure 8.1.
6. Rotate the grid until the CoG falls right into the center of the hole. This will give you the exact angle at which the array will hang under those conditions.
7. Change grid angle and height until the design meets the acoustical requirements and the Center of Gravity falls exactly on one of the pick-up holes.

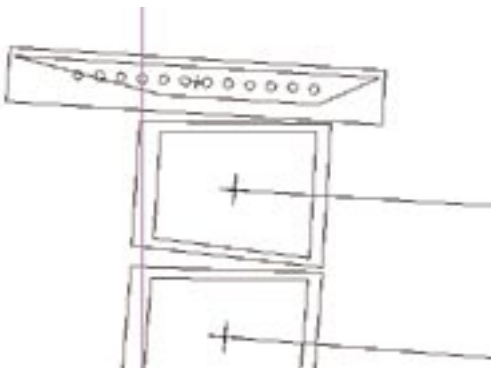

Figure 8.1. MG-MICA with MGCP installed (zoomed view)

MTF-MILO/MICA TRANSITION FRAME

When using MICA enclosures as downfill on a MILO array, the MTF-MILO/MICA transition frame is used between the lowest MILO and the first MICA in the combined array.

List of Contents: MTF-MILO/MICA Transition Frame Kit (40.147.043.01)			
	Qty	**Part Number**	**Description**
	1	40.147.043.01	MTF-MILO/MICA Transition Frame

The transition frame allows angles from 0 to 5 degrees between the MILO and the MICA underneath it. These nine positions available are the same angles as between MILO to MILO (0.5-degree increments between 0 and 3 degrees, and 1-degree increments between 3 and 5 degrees).

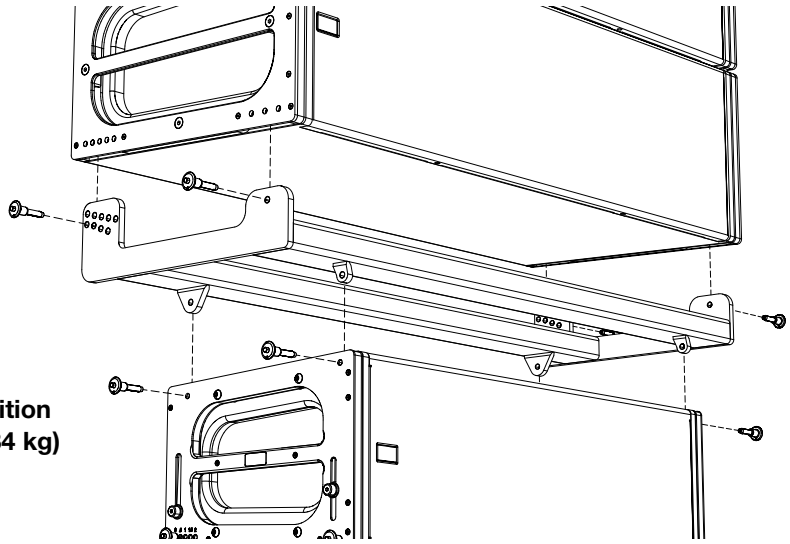

MTF-MILO/MICA Transition Frame Weight: 75 lbs (34 kg)

Table 11. MTF-MILO/MICA Load Ratings		
Factor of Safety	FS5	FS7
Total Suspended Weight	1860 lbs (844 kg)	1285 lbs (583 kg)
MICA Equivalent Cabinets	12	8
Maximum Grid Tilt	-45° to +45°	-45° to +45°

CAUTION: Do not exceed the maximum rated weight underneath the MTF-MILO/MICA transition frame.

CAUTION: Do not exceed the maximum rated weight for the MILO's MG-3D/M multipurpose grid with combined MILO, transition frame, MICA, and any other elements in the array. For information on the MG-3D/M load rating, please consult MG-3D/M Multipurpose Grid Assembly Guide (Part # 05.132.036.01).

MDTL-MICA DOWNTILT LINK

The MDTL-MICA downtilt link adds a fixed amount of downtilt to ground-stacked MICA loudspeakers. The versatile MDTL-MICA links connect to the rear GuideALinks of the bottom MICA and can be used to downtilt MICAs when they are ground-stacked on top of the MG-MICA or the 600-HP subwoofer.

CAUTION: The MDTL-MICA downtilt link is only rated for ground-stacking applications, and should not be used in any flown configuration.

List of Contents: MDTL-MICA Downtilt Link Kit (40.147.060.01)			
	Qty	**Part Number**	**Description**
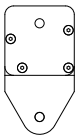	2	40.147.059.01	MDTL-MICA Downtilt Link
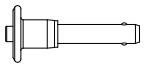	2	134.021	3/8" x 1.125" Quick-Release Pin (Blue button)

MDTL-MICA with MG-MICA Grid

The MDTL-MICA downtilt link adds 10 degrees of downtilt to ground-stacked MICA loudspeakers with respect to the MG-MICA grid. With these additional 10 degrees, the MDTL-MICA provides a downtilt range between 12.5 degrees and 18.5 degrees. Please refer to Table 12 on page 35.

The downtilt link connects between the MG-MICA grid and the lowest MICA loudspeaker's rear GuideALinks. Use the 3/8" x 1.125" quick-release pins (with Blue release button) included in the kit to connect the MDTL-MICA downtilt links to MICA's rear GuideALinks, and the 3/8" x 1.5" (with Red release button) included with the MG-MICA to connect the links to the grid. One downtilt link per side must be used.

NOTE: Up to six (6) MICA loudspeakers can be easily ground-stacked on the MG-MICA grid. Because of the increased difficulty of stacking more than this quantity, as well as for safety reasons, avoid ground-stacking more than six MICA loudspeakers.

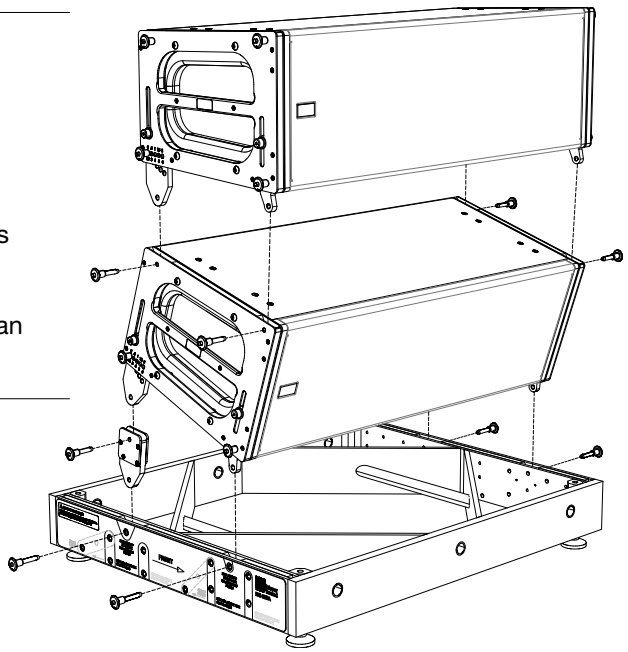

NOTE: When ground-stacking with the MG-MICA grid, screw the four provided leveling feet (part #124.878) into the four corners.

CAUTION: To further secure larger ground-stacked arrays, particularly in outdoor situations, use a tie down or weight on the grid and/or a safety system on the array.

Table 12. MICA Link Positions Using the MDTL-MICA and MG-MICA		
Rear	Front*	Angle for MICA
0	0	-18.5°
0.5	0	-18°
1	0	-17.5°
1.5	0	17°
2	0	-16.5°
2.5	0	-16°
3	0	-15.5°
4	0	-14.5°
5	0	-13.5°
6	0	-12.5°

*The use of the +7 position in the front link is not recommended when using the MTDL-MICA

MDTL-MICA with 600-HP

The MDTL-MICA downtilt link adds 10-degree of downtilt to ground-stacked MICA loudspeakers on top of a 600-HP subwoofer. With these additional 10 degrees the MDTL-MICA provides a downtilt range between 10 degrees and 16 degrees.

The downtilt link connects between the top 600-HP and the lowest MICA loudspeaker rear GuideALinks. Use the 3/8" x 1.125" quick-release pins (with Blue release button) to connect the MDTL-MICA downtilt links to MICA's rear GuideALinks and to the 600-HP rigging frame. One downtilt link per side must be used.

NOTE: When ground-stacking with the MG-MICA grid, screw the four provided leveling feet (part #124.878) into the four corners.

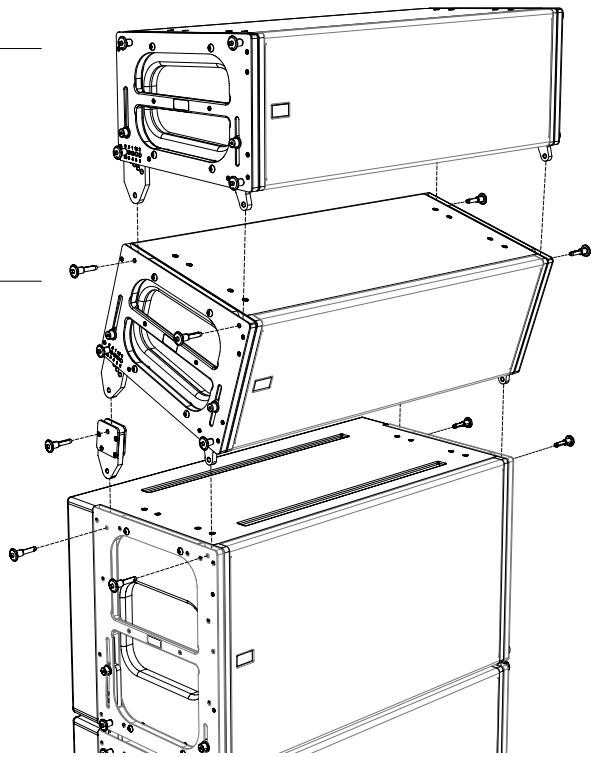

CAUTION: To further secure larger ground-stacked arrays, particularly in outdoor situations, use a tie down or weight on the grid and/or a safety system on the array.

Table 13. MICA Link Positions Using the MDTL-MICA and 600-HP		
Rear	Front*	Angle for MICA
6	0	-10°
5	0	-11°
4	0	-12°
3	0	-13°
2.5	0	-13.5°
2	0	-14°
1.5	0	-14.5°
1	0	-15°
0.5	0	-15.5°
0	0	-16°

*The use of the +7 position in the front link is not recommended when using the MTDL-MICA

CAUTION: The MDTL-MICA downtilt link is only rated for ground-stacking applications, and should not be used in flown configurations.

MCF-MICA CASTER FRAME

The heavy-duty MCF-MICA Caster Frame is used to transport and maneuver stacks of up to four MICA enclosures. The loudspeakers' GuideALinks are fully compatible with the caster frame and connect them securely, allowing convenient transport of straight or splayed stacks.

List of Contents: MCF-MICA Caster Frame Kit (40.147.033.01)			
	Qty	**Part Number**	**Description**
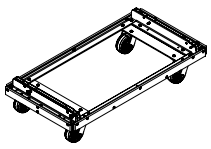	1	40.147.033.01	MCF-MICA Caster Frame
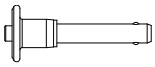	4	134.023	3/8" x 1.5" Quick-Release Pin (Red button and lanyard)

NOTE: Always use the included 3/8" x 1.5" quick-release pins (with red release button) in the provided holes to connect the lowest MICA enclosure to the caster frame.

CAUTION: Do not exceed four MICAs high to avoid tipping over the stack.

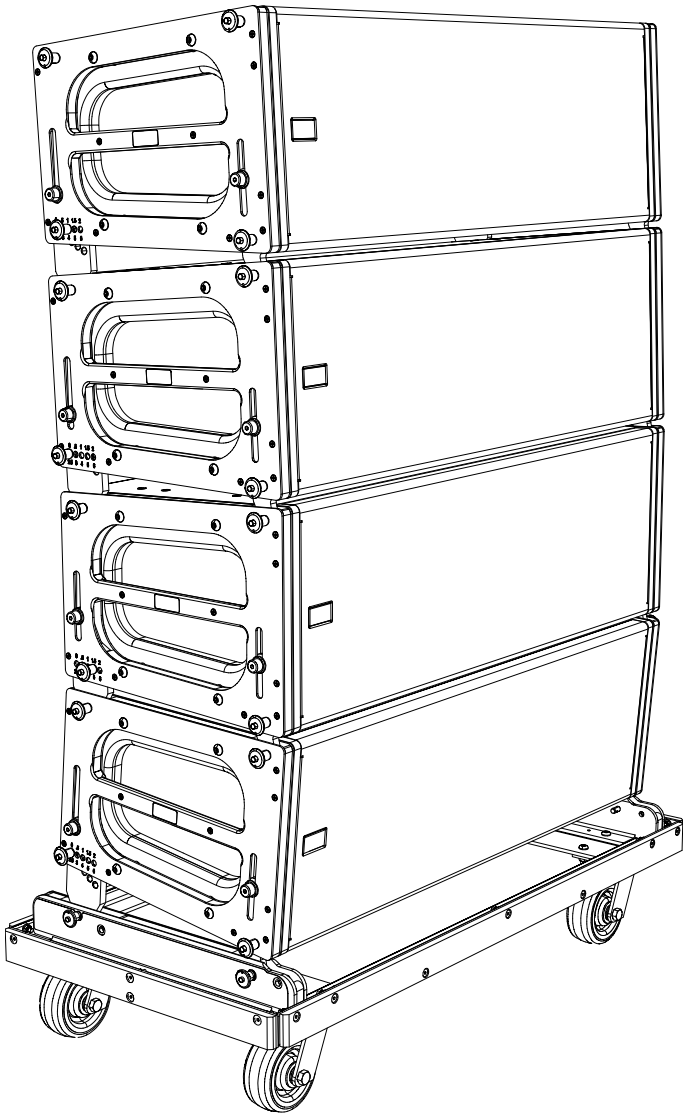

The MCF-MICA's rugged steel frame facilitates the use of forklifts. Whether deploying or striking an array, the MCF-MICA can temporarily support the weight – making it easy to assemble or disassemble the array in stacks of up to four MICAs.

The MG-MICA should only be moved sideways when being transported on the MCF-MICA caster frame.

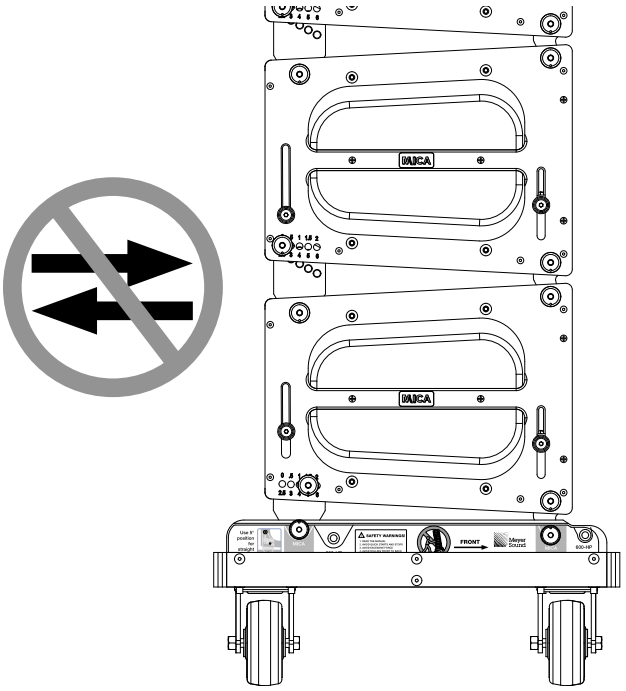

CAUTION: Avoid moving the MCF-MICA in the front-to-back direction of the loudspeakers (the long side); always move the stack sideways to avoid tipping it over.

The MICA GuideALinks allow multiple transport angles with the MCF-MICA caster frame.

- Use the 5 position (below left) on the MICA rear GuideALink to get the first MICA at 0 degrees with respect to the caster frame. This setting is preferred when all MICAs are at 0 degrees.
- Use the 0 position (below right) to downtilt the first MICA with respect to the caster frame, to compensate if the rest of the MICAs in the stack have severe angles.

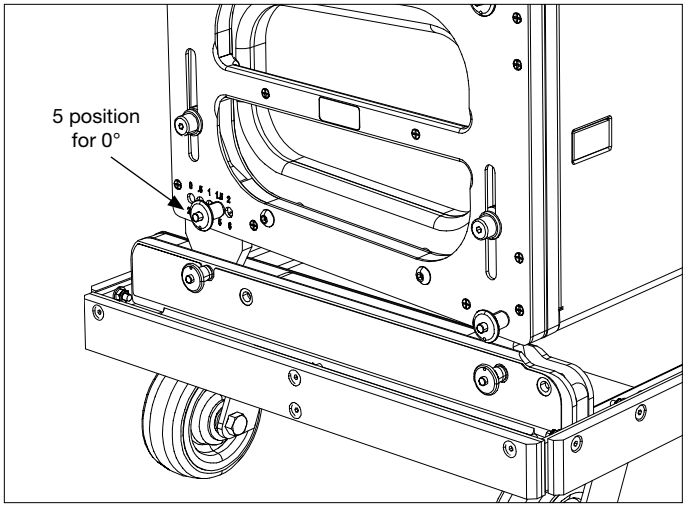

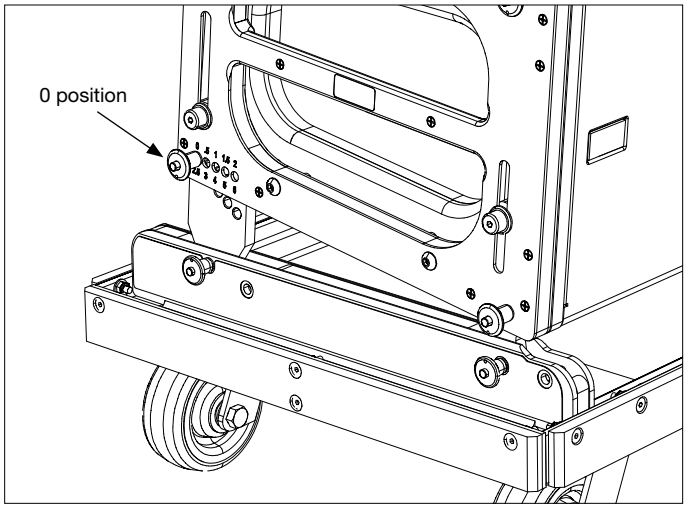

TIP: The MG-MICA multipurpose grid can travel installed on top of a MICA stack.

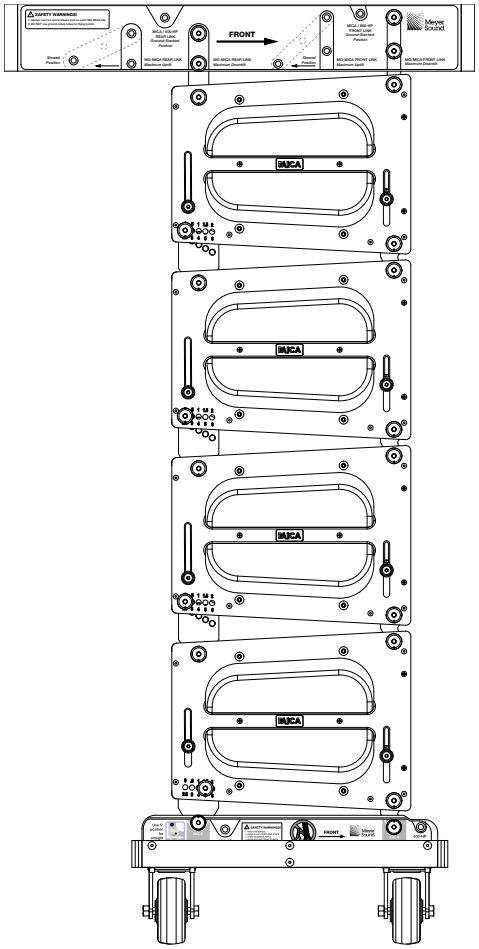

CAUTION: Avoid using the front link in the extended position (+7) when trs ansporting MICAs on the MCF-MICA to avoid tipping over the stack.

MCF-MICA for 600-HP

In addition, the MCF-MICA can be used to transport stacks up to three 600-HP subwoofers (fitted with the MRF-600 rigging frames) since it provides a dedicated set of holes for the 600-HP.

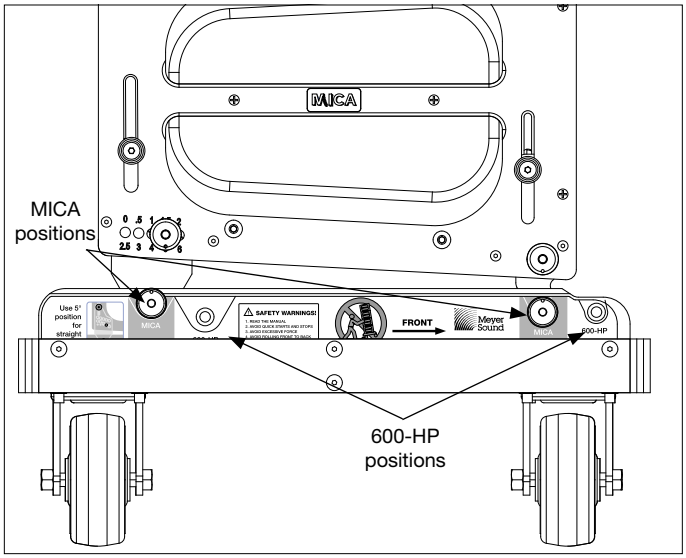

CAUTION: Always use the dedicated holes to transport the MICAs or 600-HP to provide a more stable center-of-gravity for the loudspeaker stack on the caster frame.

The MCF-MICA also allows 600-HP subwoofers to be supported in a ground-stacked configuration.

CAUTION: When using the MCF-MICA caster frame to ground-stack 600-HP subwoofers, make sure all four caster wheels are blocked to prevent the stack from rolling away.

CAUTION: Do not exceed three 600-HPs high to avoid tipping over the stack.

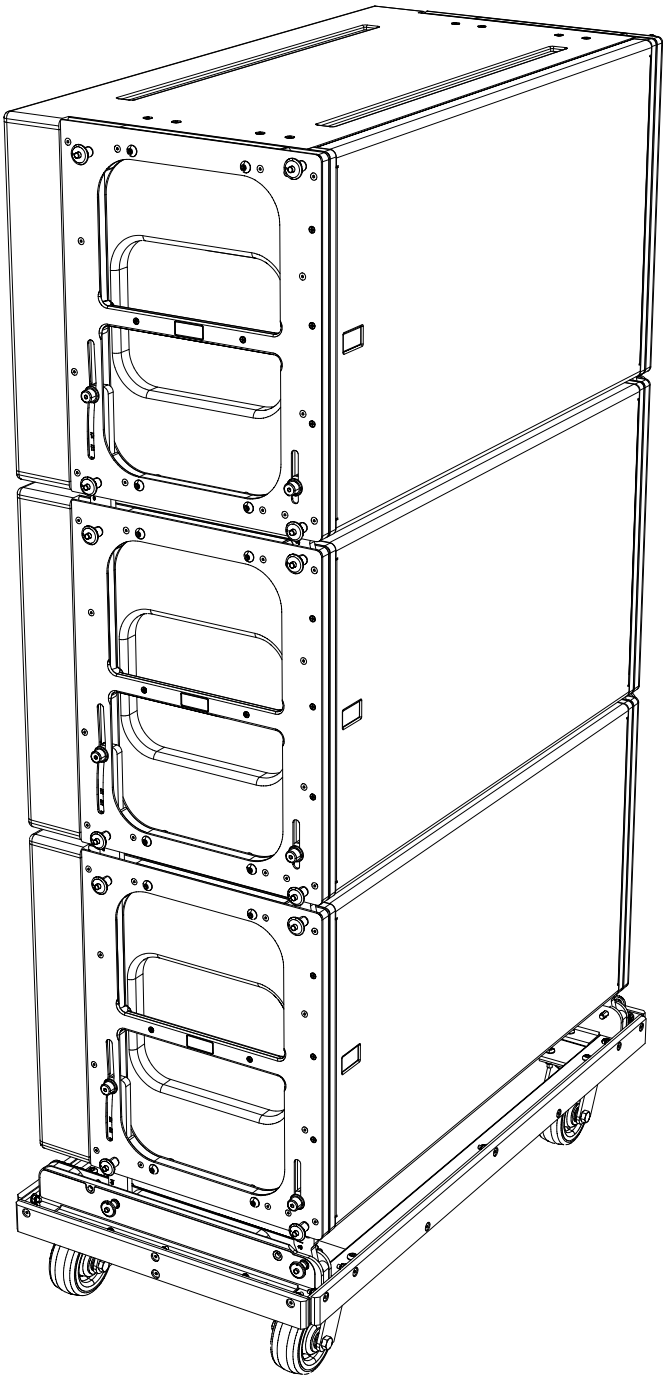

9. ASSEMBLING AN ARRAY OF MICA LOUDSPEAKERS TO THE MG-MICA GRID

1. Lay the MG-MICA grid on the floor in the approximate location where the rigging points have been established and the motors hung. Orient the grid so that the loudspeakers are pointing in the same direction as the arrows indicating Front on the grid label. Attach 3/4” shackles to the desired points on the MG-MICA grid.

NOTE: If the grid’s downstage center point is being used, it is recommended that a two-foot length of wire rope between the shackle and the motor hook be utilized to prevent the chain bag from obstructing the high-frequency elements in the top MICA loudspeakers.

---

2. Lower the motors so that the motor chain hooks can be connected to the 3/4” shackles. Once secured, raise the grid to slightly higher than the first stack of MICA (or 600-HP) loudspeakers to be linked.
3. Unstow the links if they are already stowed with the grid in the rear position, and move them to the forward position if desired. If the links are not stowed, attach the links into either the forward (maximum downtilt) or rearward (maximum uptilt) position. Ensure that two of the Red-button pins are securing each of the links to the grid.
4. Roll the first MICA or 600-HP stack into position under the grid on its MCF-MICA caster frame. Up to four MICA loudspeakers can be transported on the caster frame.

CAUTION: The front and rear grid links are of different widths, and should not be substituted for each other. The rear link is wider than the front.

---

5. Lower the grid to within approximately an inch of the top MICA enclosure, move the MICA stack so that the link pockets line up with the grid links, and bump the motors down. The links will nest in all four pockets of the top MICA loudspeaker. Pin the links to the MICA using the 3/8” x 1.125” quick-release pins (with Blue buttons).
6. Check that each link is secured to the grid with two Red-button pins and the top MICA with one Blue-button pin per corner. Check the rest of the stack to assure that each has a Blue-button pin in both the upper and lower positions in all four corners where the loudspeakers link. Change and set the angles of each of these MICA loudspeakers as desired.

NOTE: To reduce the tension on the pins when changing angles between loudspeakers, it may be necessary to bump the motor(s) and/or lift loudspeakers by hand.

---

7. Connect the power, line-level audio, and RMS connections (or VEAM all-in-one) to each loudspeaker, and tie them to the cable strain-relief points on the rear panel of the loudspeakers.
8. Pull the four Red-button pins securing the lowest MICA to detach the stack from the caster frame. Raise the grid with its linked loudspeakers to slightly higher than the second set of MICA loudspeakers, and roll the empty caster frame away. Retract the GuideALinks into the lowest suspended MICA loudspeaker (pull the Blue-button pins, use the captive handle to slide the link completely into the enclosure, and re-pin it).
9. Roll the next stack of MICA enclosures into place under the suspended array. Lower the array until it is almost touching the downstage edge of the top MICA to be attached. Line up the MICAs on the caster frame so that when the links of the suspended loudspeaker are dropped, they will go directly into the link pockets.
10) Remove the Blue-button pins from the front link pockets on the top MICA loudspeaker to be attached. Pull the pins on the lowest suspended MICA to drop the front GuideALinks into the pockets of the top MICA loudspeaker being attached.

CAUTION: If the links are not stowed as described in Step 8, you run the risk of denting or penetrating the wood on the top loudspeaker in the stack by hitting it with an extended link.

11. Pin the front links in the 0 position (unless the +7 position is required). Position and pin the rear links of the suspended MICA loudspeaker to the desired angle. “Bump” the motors to lower the rear GuideALinks into the link pockets of the MICA to be attached, and pin.
12. Repeat the previous steps until the array has been assembled. All loudspeaker-to-loudspeaker links are made with the Blue-button pins.

NOTE: As more loudspeakers are being added to the suspended array, keeping the grid as close to parallel as practical to the stage surface will ease the process of adding more loudspeakers to the array. This prevents the center of gravity from falling in front of the downstage motor, and making it virtually impossible to control the angle of the grid — complicating the attachment of the rear links. In some cases when the array length is longer than 10 - 12 loudspeakers, it may be necessary to push the suspended array toward the upstage direction and lower the array to close the gap between the rear of the flown and stacked loudspeakers.

TIP: As the flown array is being assembled and raised, the front GuideALinks on MICA can rotate over 30 degrees forward while pinned, facilitating the connection of the flown, angled array to the stacks of loudspeakers positioned on the caster frame. Roll the stack in place so that the front links mate, pin them, and then lower the array slightly so that the rear links can be pinned. Finally, unpin the caster frame from the lowest enclosure. Reverse the procedure when striking the array.

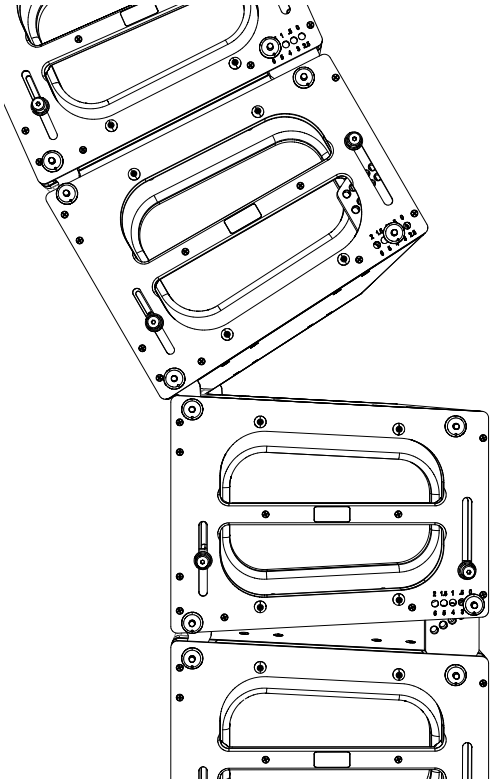

Figure 9.1. MICA can pivot over 30 degrees on front link to aid rigging



Meyer Sound Laboratories Inc.
2832 San Pablo Avenue
Berkeley, CA 94702

www.meyersound.com
T: +1 510 486.1166
F: +1 510 486.8356

© 2005
Meyer Sound Laboratories Inc.
05.147.034.01 A