MG-M’ELODIE MULTIPURPOSE GRID AND ACCESSORIES

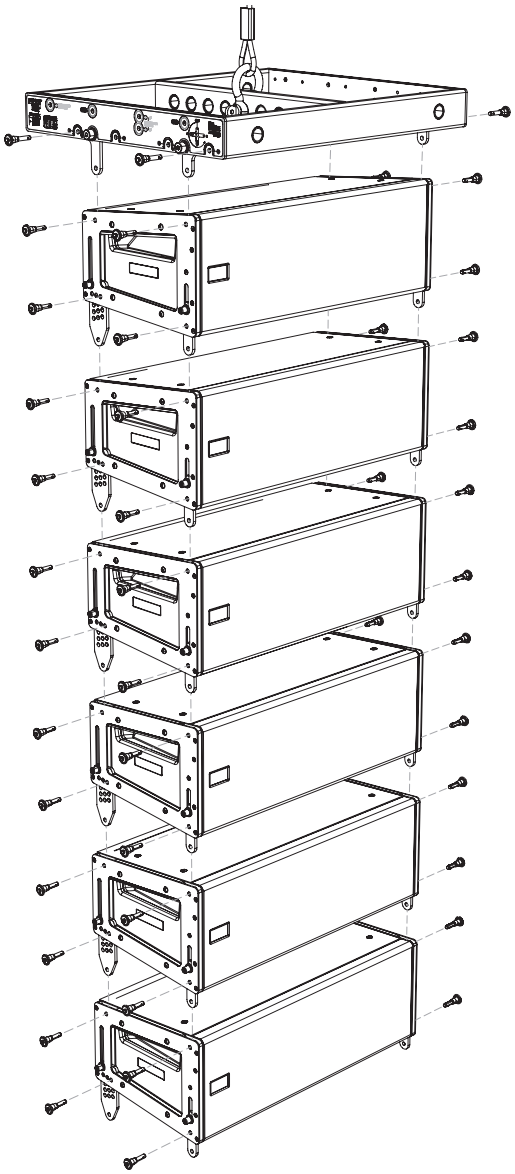

Keep these important assembly instructions.
Check www.meyersound.com for updates.

© 2007 Meyer Sound. All rights reserved.

MG-M’elodie Multipurpose Grid and Accessories Assembly Guide

The contents of this manual are furnished for informational purposes only, are subject to change without notice, and should not be construed as a commitment by Meyer Sound Laboratories Inc. Meyer Sound assumes no responsibility or liability for any errors or inaccuracies that may appear in this manual. Except as permitted by applicable copyright law, no part of this publication may be reproduced, stored in a retrieval system, or transmitted, in any form or by any means, electronic, mechanical, recording or otherwise, without prior written permission from Meyer Sound.

M’elodie, GuideALink, and MAPP Online Pro are trademarks of Meyer Sound. Meyer Sound and QuickFly are registered trademarks of Meyer Sound Laboratories Inc. (Reg. U.S. Pat. & Tm. Off.). All third-party trademarks mentioned herein are the property of their respective trademark holders.

Printed in the U.S.A.

Part Number: 05.152.019.01 B

CONTENTS

This assembly guide provides instructions on how to safely assemble and use the MG-M'elodie multipurpose grid and accessories. In addition to descriptions of the MG-M'elodie grid's major components, this guide will show how the components work together with examples of common uses.

1. Safety, Regulatory, Inspection & Maintenance Information 4

2. The M'elodie™ GuideAlink™ Rigging System 6

M'elodie GuideAlinks 6
Front GuideAlinks 6
Rear GuideAlinks 6

3. The MG-M'elodie Multipurpose Grid 8

4. Using the MG-M'elodie Multipurpose Grid to Fly M'elodie Arrays 10

Adjusting the Angle Between the Grid and the First M'elodie 10
Rotating the Grid to Achieve More Downtilt or Uptilt 11
MG-M'elodie Pickup Configurations 12
Common Pickup Configurations Using Two Motors 12
Common Pickup Configurations Using One Motor 13
Mapp Online Pro™ 14
Using Mapp Online Pro to Determine a Center Pickup Hole 14
Load Ratings Overview 16

5. Using the MG-M'elodie Grid to Ground-stack M'elodie Arrays 18

6. MTF-MICA/M'elodie Transition Frame 20

Load Ratings 21
Using the MTF-MICA/mg-M'elodie Transition Frame to Fly M'elodie Underneath a MICA Array 23
MICA-MTF Frame Angle 24
MTF Frame-M'elodie Angle 24
Using the MTF-MICA/mg-M'elodie Transition Frame to Fly M'elodie Underneath a 600-HP Array 26
600-HP-MTF Frame Angle 27
MTF Frame-M'elodie Angle 28
Using the MTF-MICA/mg-M'elodie Transition Frame to Ground-Stack M'elodie on Top of a 600-HP Array 30
M'elodie-MTF Frame Angle 31
MTF Frame-600-HP Angle 31

7. MCF-M'elodie Caster Frame 34

8. The MUB-M'elodie Multipurpose U-bracket 38

Load Ratings 40
MUB-M'elodie Angle Settings 41
MUB-M'elodie Floor-Mount Configurations 42
MUB-M'elodie Ceiling-Mount Configurations 43
MUB-M'elodie on a Pole-Mount Stand 44
MUB-M'elodie Flown Configurations 45

APPENDIX: Assembling An Array Of M'elodies to the MG-M'elodie Grid 46

1. SAFETY, REGULATORY, INSPECTION & MAINTENANCE INFORMATION

Please read this Statement carefully and in its entirety. It contains important information regarding safety issues, including guidelines for general safe use of rigging systems as well as advisories on government regulations and liability laws.

SCOPE OF THIS MANUAL

Although this manual contains much useful information on rigging in general, it does not claim to be a comprehensive resource on the subject. This manual assumes that the owners and/or users of a QuickFly® system are knowledgeable and experienced in the areas of rigging and flying loudspeaker systems. MANY ISSUES OF CRUCIAL CONCERN, SUCH AS THE DETERMINATION OF APPROPRIATENESS AND CONDITION OF VENUE RIGGING POINTS, CANNOT BE ADDRESSED HERE. THEREFORE, THE USER MUST ASSUME ALL RESPONSIBILITY FOR THE APPROPRIATE USE OF QUICKFLY SYSTEMS IN ANY PARTICULAR LOCATION OR CIRCUMSTANCE.

The suspension of large, heavy objects in public places is subject to numerous laws and regulations at the national/federal, state/provincial, and local levels. This manual does not address the specifics of any such applicable laws and government regulations. This manual details procedures and practices consistent with those generally acknowledged as allowable and safe in the United States. However, the user must assume responsibility for making sure that use of any QuickFly system and its components in any particular circumstance or venue conforms to all applicable laws and regulations in force at the time.

LOAD RATINGS AND SPECIFICATIONS

Long-term safe operation is a central concern in the design and manufacture of any rigging/flying system. Meyer Sound has taken great care in material selection and component design. After manufacture, all load-critical system components are individually inspected.

All load ratings and other specifications given in this manual are the result of accepted engineering practice and careful testing. However, such specifications and ratings are subject to change. USERS SHOULD CHECK THE QUICKFLY SECTION OF THE MEYER SOUND WEB SITE AT

http://www.meyersound.com

OR CONTACT TECHNICAL SUPPORT AT REGULAR INTERVALS TO CHECK FOR UPDATED OR REVISED INFORMATION.

REGULATORY COMPLIANCE

The design and safe working load (SWL) ratings of the QuickFly system are intended to be in compliance with all known regulatory statutes currently applicable in the United States. Unless otherwise specified, all working loads are based on either a 5:1 or 7:1 safety factor. However, as noted above, there are wide variations internationally in the regulations and practices applying to suspension of sound systems in public places. Although regulations in the United States are generally among the most stringent, safety codes may be even stricter in a few localities (such as those highly prone to earthquakes). In addition, applicable safety codes are open to interpretation: Government officials in one location may have a stricter interpretation than another local official, even when operating under the same regulations and in the same legal jurisdiction.

CONSEQUENTLY, USERS OF QUICKFLY RIGGING SYSTEMS SHOULD BE PREPARED TO TAKE ADDITIONAL SAFETY ASSURANCE MEASURES BEYOND THOSE OUTLINED IN THIS MANUAL. IN ALL CASES, IT IS THE RESPONSIBILITY OF THE USER TO MAKE CERTAIN THAT ANY MEYER SOUND LOUDSPEAKER SYSTEM IS SUSPENDED IN ACCORDANCE WITH ALL APPLICABLE NATIONAL/FEDERAL, STATE/PROVINCIAL, AND LOCAL REGULATIONS.

SAFETY RESPONSIBILITIES "ABOVE THE HOOK"

In most touring applications of rigging systems, the touring sound provider is normally responsible for ensuring the safety of the suspension system only below the attachment point. The safety and suitability of the attachment point is generally seen as the responsibility of the venue owner or operator. However, this distinction ("above the hook" versus "below the hook") can be open to interpretation. Touring system operators should double-check to make certain that attachment points are approved and suitably load rated, and that the points used are those identified as such by the venue owner or operator. AS AN EXTRA PRECAUTION, CAREFUL INSPECTION OF THE ATTACHMENT POINTS IS ADVISED BEFORE FLYING, PARTICULARLY IN OLDER VENUES OR THOSE HOSTING FREQUENT EVENTS USING LARGE SOUND AND LIGHTING SYSTEMS. In any case, Meyer Sound QuickFly systems are intended only for suspension from approved rigging points, each known to have ample SWL margins for the system components suspended below them.

INSPECTION AND MAINTENANCE

The Meyer Sound QuickFly systems are an assembly of mechanical devices, and are therefore subject to wear and tear over prolonged use, as well as damage from corrosive agents, extreme impact, or inappropriate use.

BECAUSE OF THE SAFETY ISSUES INVOLVED, USERS MUST ADOPT AND ADHERE TO A SCHEDULE OF REGULAR INSPECTION AND MAINTENANCE. IN TOURING APPLICATIONS, KEY COMPONENTS MUST BE INSPECTED BEFORE EACH USE. Such inspection includes examination of all load-bearing components for any sign of undue wear, twisting, buckling, cracking, rusting, or other corrosion. In regard to rust and corrosion, the main components of a QuickFly system are either protected by an exterior coating or made from stainless steel, which is impervious to rust and resistant to most corrosive fluids. Nevertheless, normal use and shipping vibrations can wear through the protective coatings, and extremely corrosive fluids (such as battery acid) can cause severe damage with prolonged exposure even to protected parts. Particular attention should be given to screws, bolts, and other fasteners to make certain the fittings are tight and secure. Metal seams and welds should be examined for any sign of separation or deformation. Meyer Sound strongly recommends that written documentation be maintained on each QuickFly system, noting date of inspection, name of inspector, points of system checked, and any anomalies discovered.

Annual Comprehensive Examination and Test Program

In addition to routine checks on the road for touring systems, Meyer Sound also recommends a careful, comprehensive system examination and testing "at home" in the warehouse or other appropriate location at regular intervals. Such at home examinations and tests should occur at least once a year, and should include a careful inspection of each component under ideal lighting conditions, and then a final comprehensive check of the entire system after it has been flown.

If any anomalies or defects are discovered that could possibly affect the safety or integrity of the system, affected parts or subsystems should be replaced in their entirety before that part of the system is flown again.

REPLACEMENT PARTS

Any component found to be defective, or any safety-related component you even suspect might be defective, should be replaced with the equivalent, approved part. Parts specific to a QuickFly system should be ordered directly from Meyer Sound. No attempt should be made to substitute what appears to be equivalent or "mostly the same" generic replacements. Some parts used in QuickFly systems are identical to those used in other rigging applications. To the best of our knowledge, most of these suppliers are reputable and their products are reliable. However, Meyer Sound has no way of assuring the quality of products made by these various suppliers. Therefore, Meyer Sound is not responsible for problems caused by components that were not supplied by Meyer Sound.

TRAINING

QuickFly systems are relatively straightforward and easy to use. However, they should only be used by persons trained in the use of loudspeaker rigging systems who have mastered key points of assembly, rigging and flying. Users should read this manual in its entirety before attempting to deploy any QuickFly system. You may make additional copies of this manual as necessary for in-house use; copies may not be made for any other purpose.

CAUTION: All Meyer Sound products must be used in accordance with local, state, federal and industry regulations. It is the owner's and/or user's responsibility to evaluate the reliability of any rigging method for their application. Rigging should be carried out only by experienced professionals.

CAUTION: Always use properly rated rigging hardware.

CAUTION: It is important to inspect rigging hardware regularly and replace worn or damaged components immediately.

2. THE M'ELODIE™ GUIDEALINK™ RIGGING SYSTEM

M'elodie loudspeakers feature Meyer Sound's QuickFly® rigging system with rugged, reliable and simple components. QuickFly facilitates deploying the loudspeakers in a variety of applications. M'elodie is designed to be rigged using professional components, and its custom front and rear GuideALinks rigidly couple the individual M'elodie enclosures for flying, stacking, or transporting in stacks while still in various splayed positions.

M'ELODIE GUIDEALINKS

The M'elodie loudspeaker's captive QuickFly rigging hardware features rigid GuideALinks contained within recessed guides in the bottom front and rear corners of the enclosure. A slot and convenient pinned knob allow each link to be moved and pinned for arraying and storage. In normal use, the front links are used as the pivot point, and splay between enclosures is introduced with the rear links.

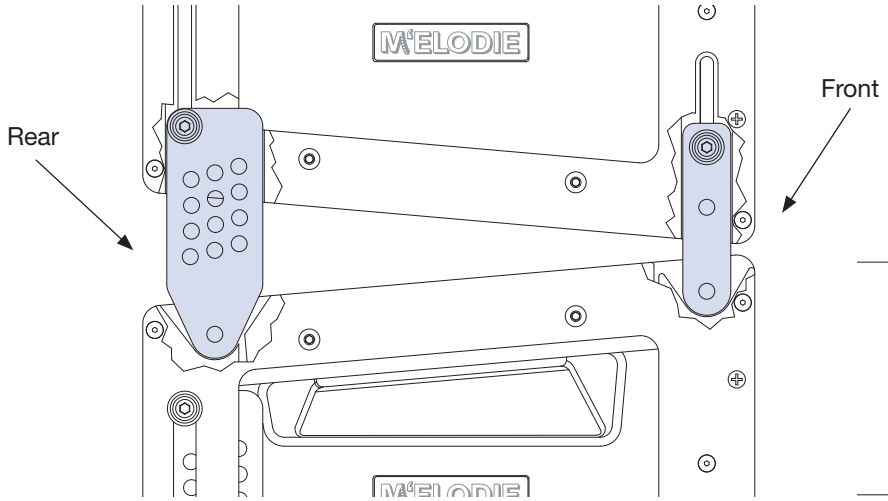

CAUTION: Always use M'elodie quick-release pins (5/16" x 0.63") to secure each GuideALink. The knobs are for retracting and extending the links and securing them in place.

Front GuideAlinks

In use, the front links act as the pivot point, and the splay between enclosures is introduced with the rear links. When stowing the front link, the knob is positioned at the top of the slot.

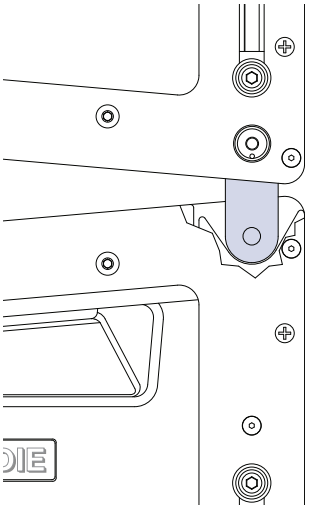

Rear GuideAlinks

The rear GuideALinks permit 12 splay angles between 0 and 11 degrees in 1-degree increments. The GuideALink has four rows, each with 3 columns; splay angle between cabinets increases by 1 degree as the GuideAlink is pinned in adjacent positions from front to back and top to bottom.

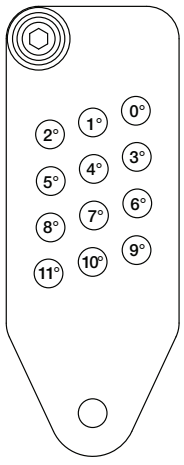

A small label on the end frame serves as a guide to pin positions in the GuideALink, to help locate the desired angle as the knob moves up the frame. In the bottom position, the splay angle between cabinets is 0 degrees. As you move the knob upwards, the angle increases to 11 degrees. To stow the link, the knob is moved to the top of the slot.

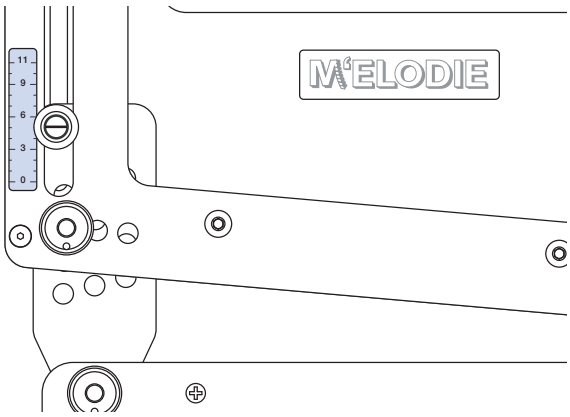

NOTE: The numeric designations on the M'elodie rigging and the actual achieved angles are equivalent when one M'elodie loudspeaker is connected to another (for example, setting the rear link at "4" achieves a 4-degree downtilt of the lower enclosure relative to the upper). These are relative angles between the two enclosures. How they relate to the floor, stage, and seating angles in the venue depends on the orientation of the grid, the other angles already set by the loudspeakers in the array above them, whether they are used with the MG-M'elodie grid in a ground-stacked configuration, and other factors. Use MAPP Online Pro™ to determine the actual angles and coverage pattern of the array.

NOTE: Optimal acoustical performance for a M'elodie array is achieved by using the adequate number of units as well as selecting the specific angles between cabinets to fill the requirements of a venue. Use the design guidelines in Chapter 5 of the M'elodie Operating Instructions (available at www.meyersound.com) to design systems; use MAPP Online Pro to verify designs and get rigging information.

CAUTION: As part of the regular inspection and maintenance procedure for M'elodie loudspeakers, check each captive GuideALink knob pin to ensure they are tight by turning them counterclockwise by hand. If a pin turns, it must be reset into the link using Loctite® 290, and be allowed to cure for 48 hours and retested before the loudspeaker is flown.

3. THE MG-M'ELODIE MULTIPURPOSE GRID

The MG-M'elodie multipurpose grid allows multiple M'elodie ultracompact high-power curvilinear array loudspeakers to be flown or ground-stacked in numerous configurations.

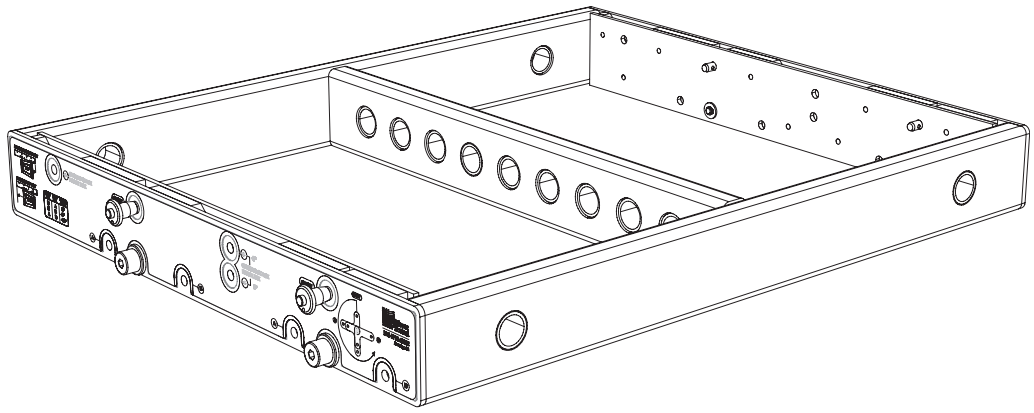

In flown configurations, the first M'elodie loudspeaker in the array can be connected to the MG-M'elodie grid at 0, -5, or -10 degrees with respect to the grid. The uptilt and downtilt of the MG-M'elodie and the complete array hung underneath can additionally be adjusted using chain motors, or differing lengths of steel or SpanSets.

List of Contents: MG-M'elodie Multipurpose Grid Kit (Part #40.152.019.01)
Required for use with M'elodie loudspeaker(s)

	Qty	Part Number	Description
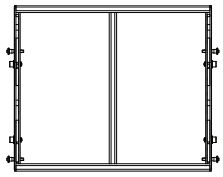	1	40.152.019.01	MG-M'elodie Multipurpose Grid
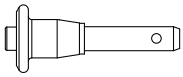	4	134.025	5/16" x 0.875" Quick-Release Pins (red button and lanyard)

MG-M'elodie Multipurpose Grid Dimensions:

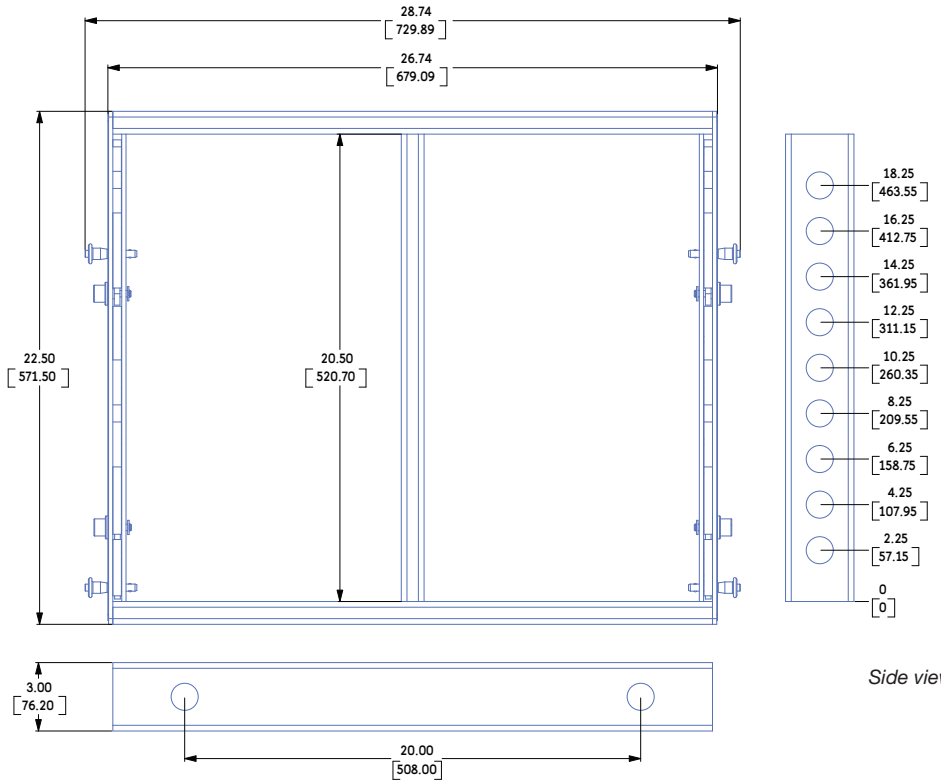

Side view of center beam

MG-M'elodie Multipurpose Grid Weight: 36 lbs (16.33 kg)

4. USING THE MG-M'ELODIE MULTIPURPOSE GRID TO FLY M'ELODIE ARRAYS

ADJUSTING THE ANGLE BETWEEN THE GRID AND THE FIRST M'ELODIE

The MG-M'elodie has four captive grid links; each grid link has three positions. In flown configurations, the first M'elodie loudspeaker in the array can be connected to the MG-M'elodie grid at 0, -5, and -10 degrees depending on the combination of the grid links position (see Table 1). In addition, the grid links can be stowed for transport.

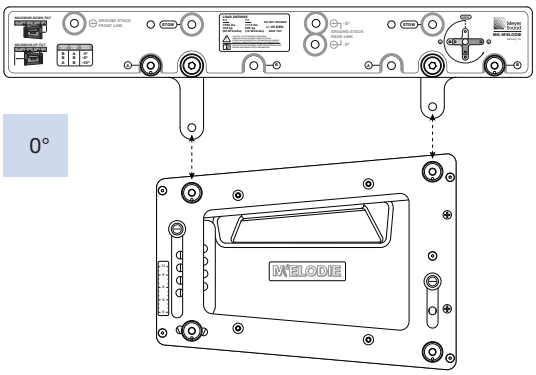

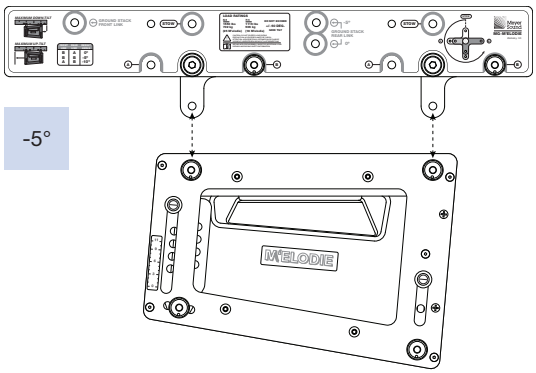

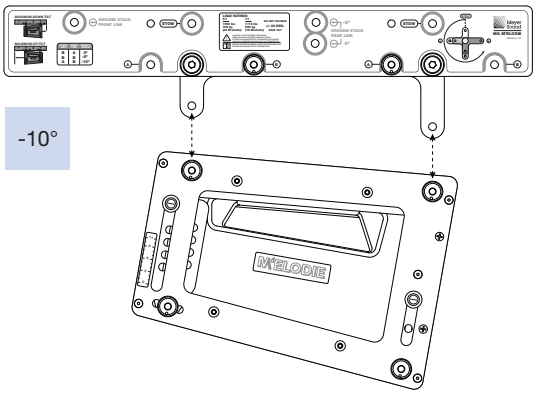

CAUTION: Always use red button pins (5/16" x 0.875") or blue button pins (5/16" x 1.25", used with M1Ds) to secure each grid link to the MG-M'elodie. Do not use the standard M'elodie black button pins (5/16" x 0.63") for the grid since they are shorter and will not lock in place. Use the black button pins on the M'elodie only.

Table 1. Angle between MG-M'elodie grid and first M'elodie loudspeaker

Front*	Rear	Angle
A (Short)	B (Long)	0°
A (Short)	A (Short)	-5°
B (Long)	A (Short)	-10°

**The MG-M'elodie can be rotated; please see next section for details.*

In addition to these angles, the uptilt and downtilt of the MG-M'elodie and the array hung underneath can be adjusted using chain motors or differing lengths of steel or SpanSets, depending on the pickup configuration.

Please note that the grid links remain with the grid as it is removed and transported in touring applications. Pull the quick-release pins, rotate the links in the stowed position, and insert the pins again. Alternately, the grid can remain connected to the top M'elodie loudspeaker and be transported with that stack using the MCF-M'elodie caster frame.

ROTATING THE GRID TO ACHIEVE MORE DOWNTILT OR UPTILT

The MG-M'elodie grid can be rotated to fly M'elodie loudspeakers in two positions with respect to the grid. The "rear flown" position (M'elodie is closer to the rear of the grid) is most useful for achieving a few degrees more of uptilt and it is labeled "Maximum Up-tilt" on the grid. The "front flown" position (M'elodie is closer to the front of the grid) helps achieve a few more degrees of downtilt and it is labeled "Maximum Down-tilt."

Rotate the grid to the appropriate position and pin the grid links in place with two quick-release pins on each side.

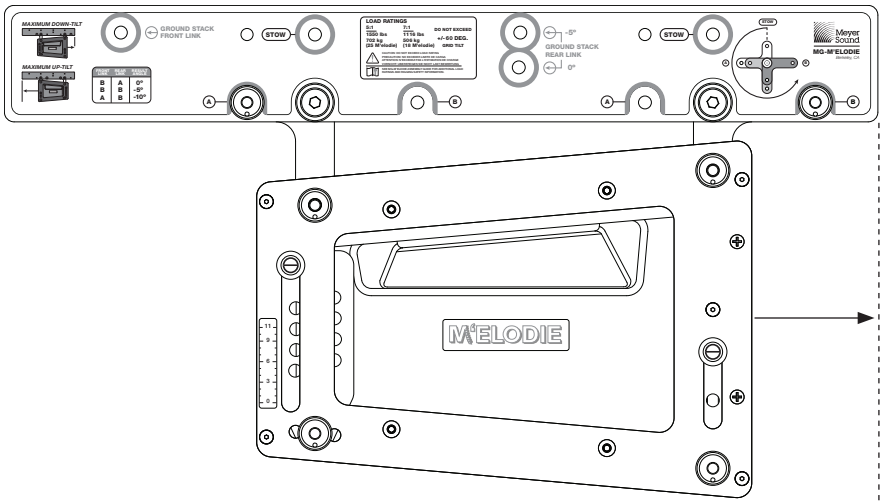

M'elodie closer to the front of the grid, to facilitate downtilt angles.

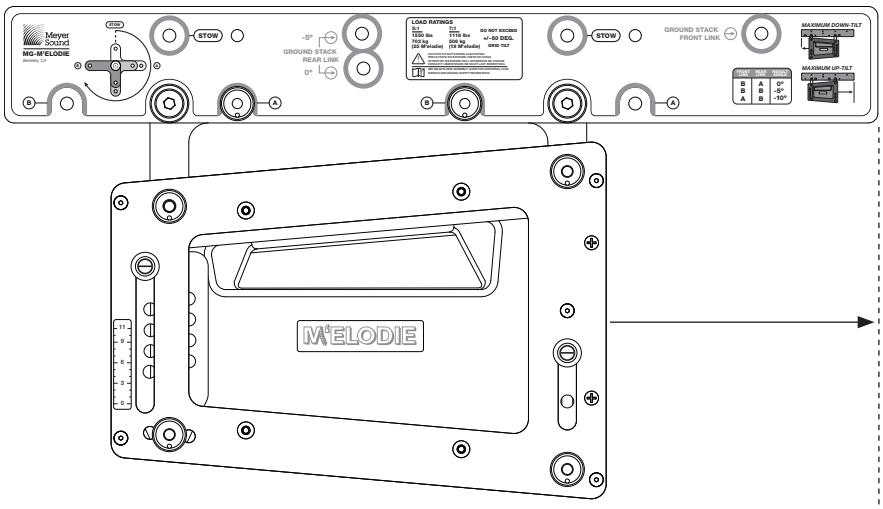

M'elodie closer to the rear of the grid, to facilitate uptilt angles.

MG-M'ELODIE PICKUP CONFIGURATIONS

The MG-M'elodie grid can accommodate a variety of pickup configurations using its four side pickup points and/or the nine center pickup points. When possible, it is recommended to use front and rear pickup points to change the tilt of the grid and the array by using the front and rear motors.

CAUTION: Always use properly rated rigging hardware. The use of 5/8" shackles for the MG-M'elodie grid's pickup points is recommended.

It's also possible to bridle between pickup points to give better stability to the grid compared to a single point per side.

CAUTION: If a bridle is used between pickup points on the MG-M'elodie, the angle of the bridle at the apex should not be greater than 90 degrees to avoid increasing the load on the bridles and damaging the grid.

Common pickup configurations using two motors:

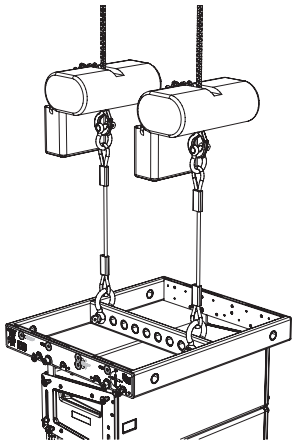

Figure 4.1. Two points, front and rear

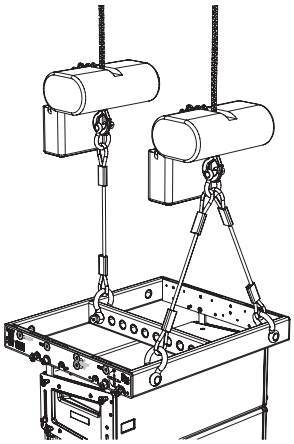

Figure 4.2. Three points, front bridle

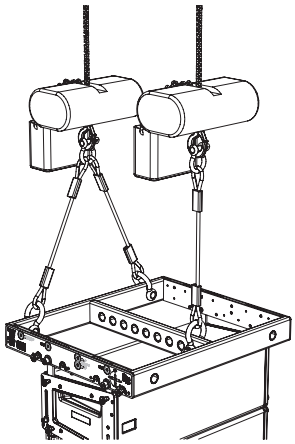

Figure 4.3. Three points, rear bridle

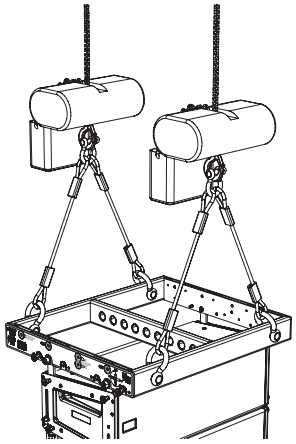

Figure 4.4. Four points, front and rear bridle

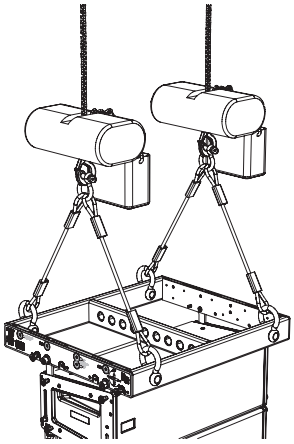

Figure 4.5. Four points, front and rear bridles on sides

In addition, the MG-M'elodie can be suspended from a single motor. However, limitations like the load rating of the motor and the pickup point in the ceiling "above the hook" need to be taken into consideration. Also, it becomes more difficult to change the tilt angle of the grid.

NOTE: The design of the MG-M'elodie allows the use of any pickup configuration without affecting the load rating.

CAUTION: Make sure that the single suspension point in the venue is rated for the load of the entire suspended array, including the loudspeakers, grid, and other attached connections and accessories.

Common pickup configurations using one motor:

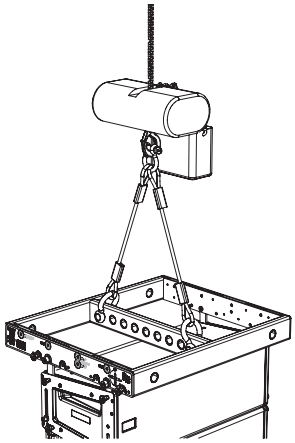

Figure 4.6. Single motor, center front and rear

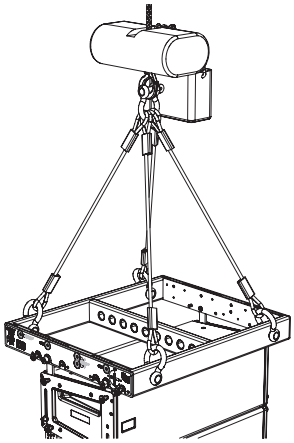

Figure 4.7. Single motor, four corners

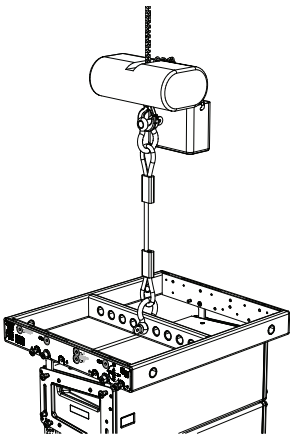

Figure 4.8. Single motor, center pickup point

TIP: MAPP Online Pro's Center of Gravity feature makes it very easy to determine the appropriate center pickup hole in the MG-M'elodie grid, as discussed in the following section.

MAPP ONLINE PRO

MAPP Online Pro is a powerful acoustical prediction software that is an invaluable tool when designing a system. This software is a cross-platform, Java-based application for accurately predicting the coverage pattern, frequency response, impulse response, and maximum SPL output of single or arrayed Meyer Sound loudspeakers. MAPP Online Pro facilitates configuring arrays and, optionally, defines the environment in which they will operate — including air temperature, pressure, and humidity, as well as the location and composition of walls.

In addition, MAPP Online Pro displays a wealth of information related to the rigging of the system:

- Location of the M'elodie array's center of gravity. This information is critical in the determination of center pickup point and max uptilt or downtilt of the array
- Total weight of the array.
- Distribution of the load on the front and rear points.
- Height and depth of the array

You can find MAPP Online Pro at www.meyersound.com.

NOTE: In order to use MAPP Online Pro, you will need to register by clicking "Apply for MAPP Online Pro" on the Web site listed above. After registration and upon approval, an e-mail will be sent to you with a user name and password along with the address for the Web site where you can download MAPP Online Pro. Online instructions will guide you through the download and setup process.

Using Mapp Online Pro to Determine a Center Pickup Hole

1. Open the dialog **Configure > Insert Loudspeaker System** and create the array below the MG-M'elodie grid. Select the M'elodie Forward or M'elodie Rearward grid position, depending on whether more downtilt or more uptilt is desired as a starting place. Insert the necessary quantity of loudspeakers up to the load rating (see Table 2 in next section, Load Ratings), set the initial splay angles, and set the initial grid height and positioning.
2. Change splay angles, grid angle, and height until the design meets the acoustical requirements.
3. If not active, go to **View > Array CoG (Center of Gravity)** and place a check mark next to it. You will see a magenta line that goes from the center of gravity of the array to the top of the sound field.
4. Click the Zoom button along the top right of the Sound Field, and left-click and hold while drawing a box around the top of the grid.
5. You will see the center of gravity line and the pickup holes on the MG-M'elodie grid. Select the closest hole to the line. Refer to the figure on the following page.
6. Change grid angle until the CoG falls right into the center of the hole. This will give you the exact angle at which the array will hang under those conditions.
7. Change grid angle and/or height until the design meets the acoustical requirements and the center of gravity falls on one of the pickup holes.

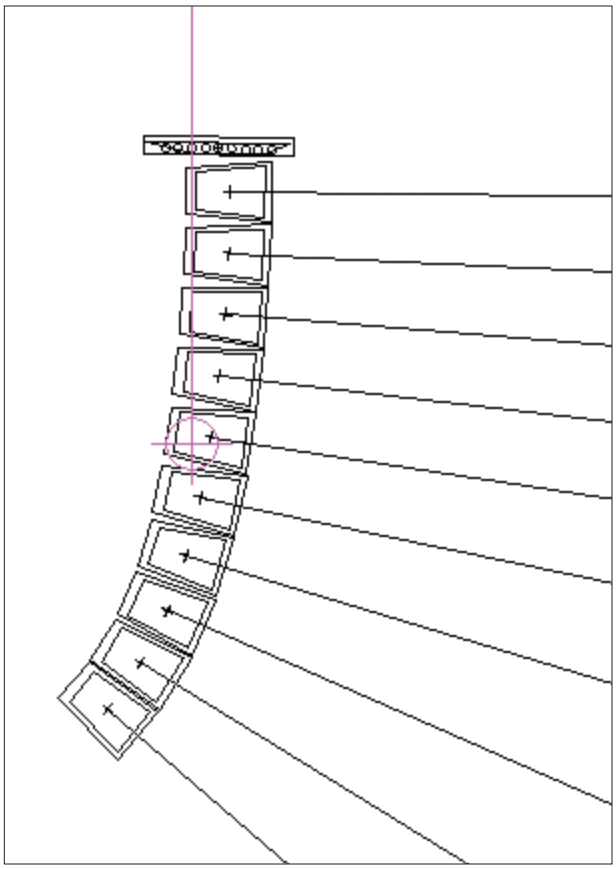

The magenta line indicates the center of gravity of the array

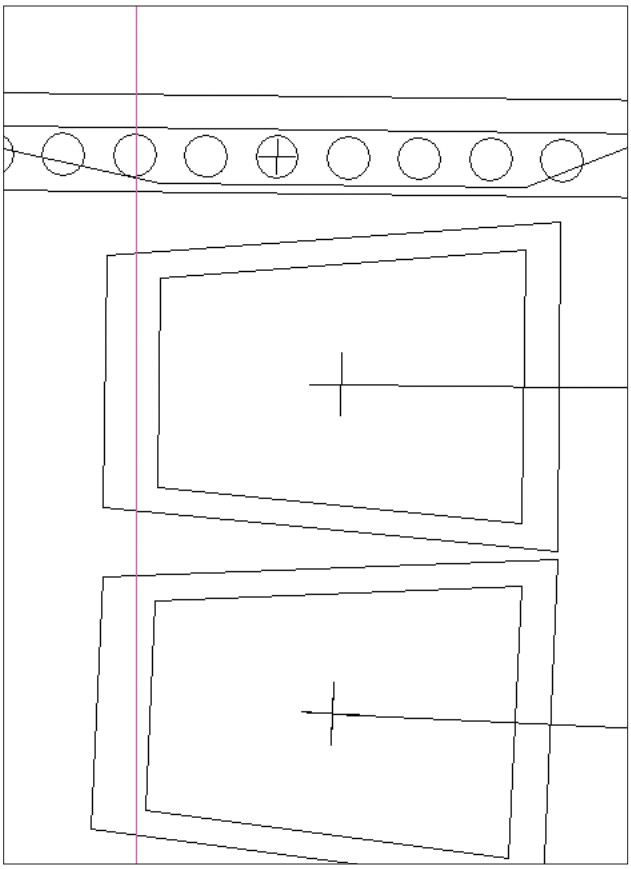

Zoomed view, showing pickup points

LOAD RATINGS OVERVIEW

All of the load ratings for the MG-M'elodie grid in this assembly guide take the following into consideration.

Prerequisite Conditions

The following conditions must be met to achieve the load ratings shown in Table 2:

- Any combination of pickup points can be used. If a bridle is used between pickup points on the MG-M'elodie, the angle of the bridle at the apex is no greater than 90 degrees.
- The tilt of the grid must be no larger than the one achieved by the natural rotation of the array.
- The array is not pulled from points other than the ones on the MG-M'elodie grid and no pull-back point should be used for tilting the array.
- The weight of the MG-M'elodie grid itself has not been included. The table rates the grid. For pickup points and/or motors where the grid will be supported, the weight of the grid needs to be added: 36 lbs (16.33 kg).
- The maximum number of M'elodie loudspeakers that may be hung in each configuration is based on the M'elodie weight of 62 lbs (28.12 kg).
- The load ratings and maximum weights allowed regard the MG-M'elodie grid and flown loudspeakers as a system, including links and pins. Thus, the maximum stress point could change from one element to another in the system.

CAUTION: Using a bridle leg shorter than the recommended length for each configuration will reduce the load rating and may damage the MG-M'elodie grid.

CAUTION: Always use properly rated rigging hardware. The use of 5/8" shackles for the MG-M'elodie grid's pickup points is recommended.

CAUTION: The weight of any additional items hung with the array, such as downfill loudspeakers and transition accessories and cable, must be considered when calculating maximum load.

Table 2. Basic MG-M'elodie load ratings				
Factor of Safety	Front Flown Position		Rear Flown Position	
	5:1	7:1	5:1	7:1
Total Suspended Weight	1550 lbs (702 kg)	1116 lbs (506 kg)	1550 lbs (702 kg)	1116 lbs (506 kg)
M'elodie Equivalent Cabinets	25	18	25	18
Maximum Grid Tilt	-60° to +60°	-60° to +60°	-60° to +60°	-60° to +60°

NOTE: In order to achieve the ratings in Table 2, the following conditions need to be met:

- The grid tilt angle can not be greater than the angles in the table with respect to the horizontal. Negative angles are downtilt and positive angles are uptilt angles.
- The array is not pulled from points other than the ones on the MG-M'elodie grid.
- No pull-back point is used for tilting the array.

5. USING THE MG-M'ELODIE GRID TO GROUND-STACK M'ELODIE ARRAYS

In addition to its suspending capabilities, the MG-M'elodie grid forms a secure base for ground-stacking. For ground-stacking, secure the GuideALinks in the bottom M'elodie enclosure to the MG-M'elodie grid using the red button (5/16" x 0.875") quick-release pins.

CAUTION: Always use red button pins (5/16" x 0.875") or blue button pins (5/16" x 1.25", used with M1Ds) to secure each grid link to the MG-M'elodie. Do not use the standard M'elodie black button pins (5/16" x 0.63") since they are shorter and will not lock in place.

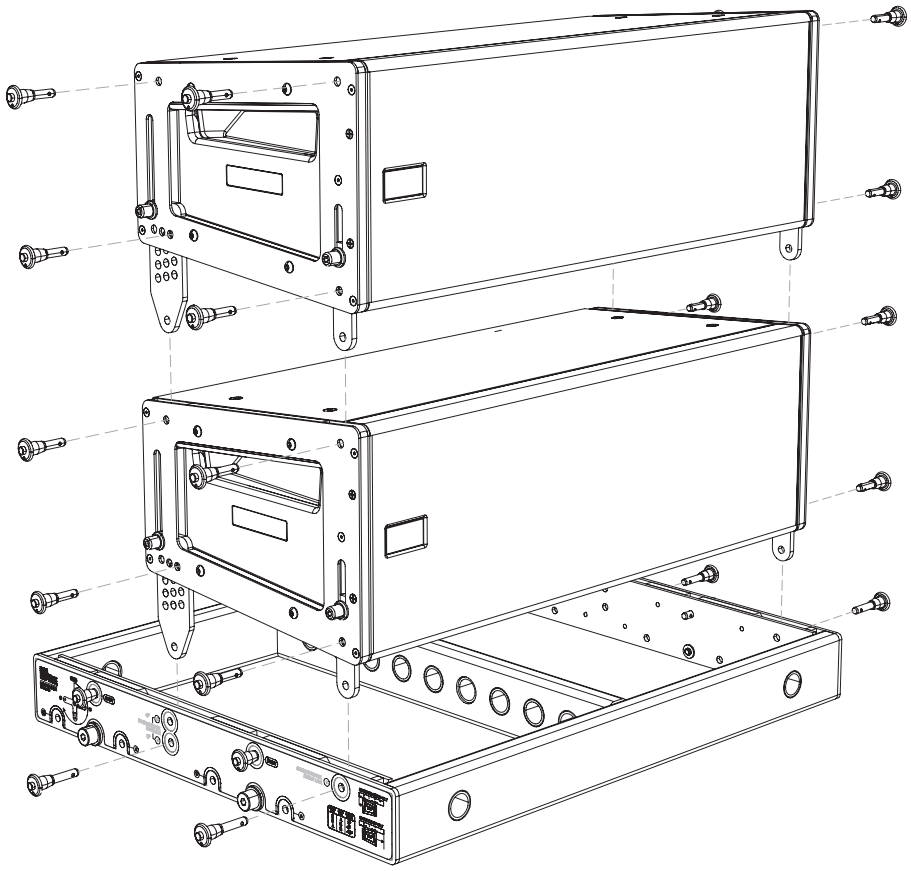

Use the link positions in the grid labeled "Ground Stack Front Link" and "Ground Stack Rear Link" for the front and rear links, respectively. Pin additional M'elodie loudspeakers at the desired splay angles to form the array.

NOTE: Up to six (6) M'elodie loudspeakers can be easily ground-stacked on the MG-M'elodie grid. Because of the increased difficulty of stacking more than this quantity, as well as for safety reasons, avoid ground-stacking more than six M'elodie loudspeakers.

CAUTION: To further secure ground-stacked arrays, particularly in outdoor situations, use a tie down or weight on the grid and/or a safety system on the array.

When the M'elodie loudspeaker is pinned to the MG-M'elodie grid, there are two positions for the rear link in the grid:

0° Position: Allows the first M'elodie to be angled from 0 to +5 degrees (uptilt)

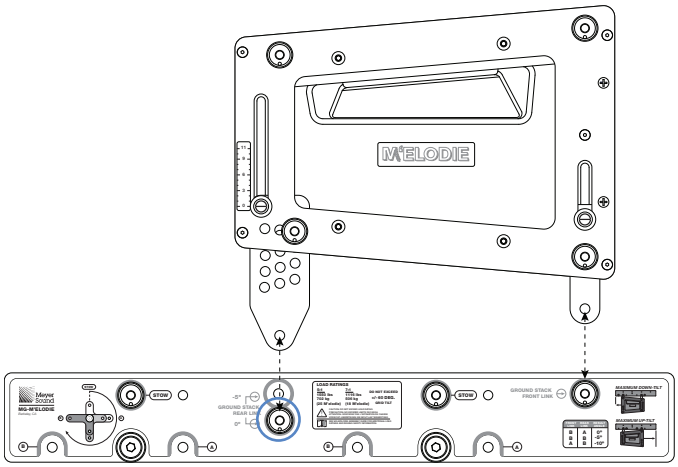

Table 3a. M'elodie rear link positions to MG-M'elodie (ground-stacked)

M'elodie rear link position	Angle for M'elodie 0° position in grid
0	0°
1	+1°
2	+2°
3	+3°
4	+4°
5	+5°
6-11	NA

-5° Position: Allows the first M'elodie to be angled from -5 degrees (downtilt) to + 5 degrees (Uptilt)

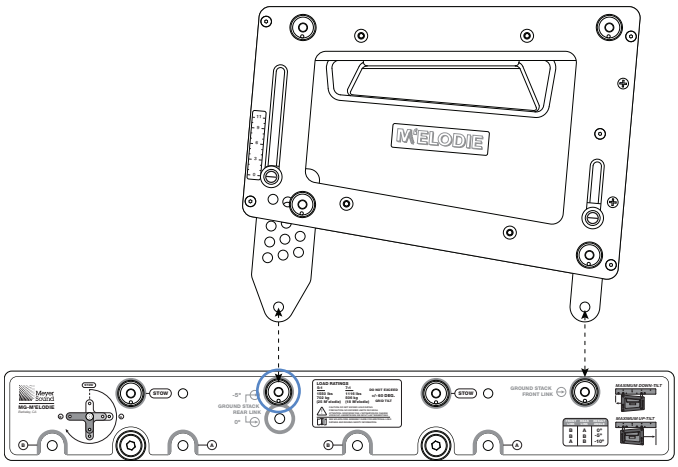

Table 3b. M'elodie rear link positions to MG-M'elodie (ground-stacked)

M'elodie rear link position	Angle for M'elodie -5° position in grid
0	-5°
1	-4°
2	-3°
3	-2°
4	-1°
5	0°
6	+1°
7	+2°
8	+3°
9	+4°
10	+5°
11	NA

6. MTF-MICA/M'ELODIE TRANSITION FRAME

The MTF-MICA/M'elodie transition frame allows numerous configurations for transitioning between MICA and 600-HP to M'elodie in a single flown or ground-stacked array.

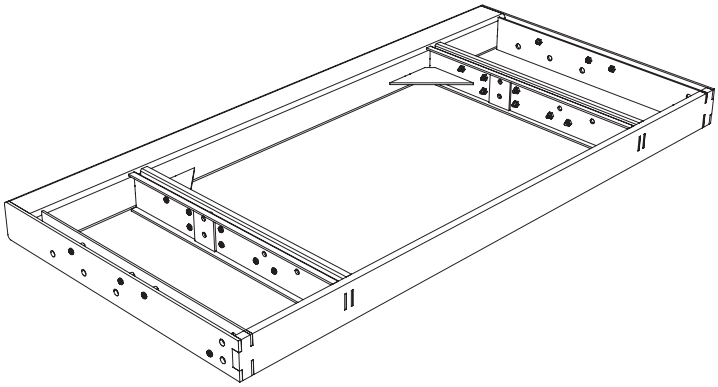

List of Contents: MTF-MICA/-M'elodie Transition Frame (Part #40.152.080.01)
Required for use with M'elodie loudspeaker(s)

	Qty	Part Number	Description
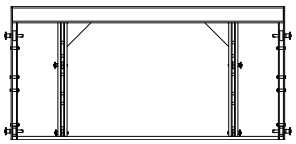	1	40.152.080.01	MTF-MICA/M'elodie Transition Frame
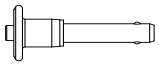	4	134.023	3/8" x 1.5" Quick-Release Pins (red button and lanyard) for MICA/600-HP
	2	61.152.082.01	MTF-600 Front Links for 600-HP Ground-stacked
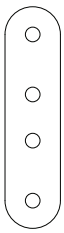	2	61.152.090.01	MTF-600 Rear Links for 600-HP Ground-stacked
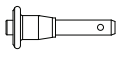	4	134.025	5/16" x 0.875" Quick-Release Pins (red button and lanyard) for M'elodie
	4	61.152.083.01	MTF-M'elodie Front and Rear Links for M'elodie Flown

MTF-MICA/M'elodie Transition Frame Dimensions:

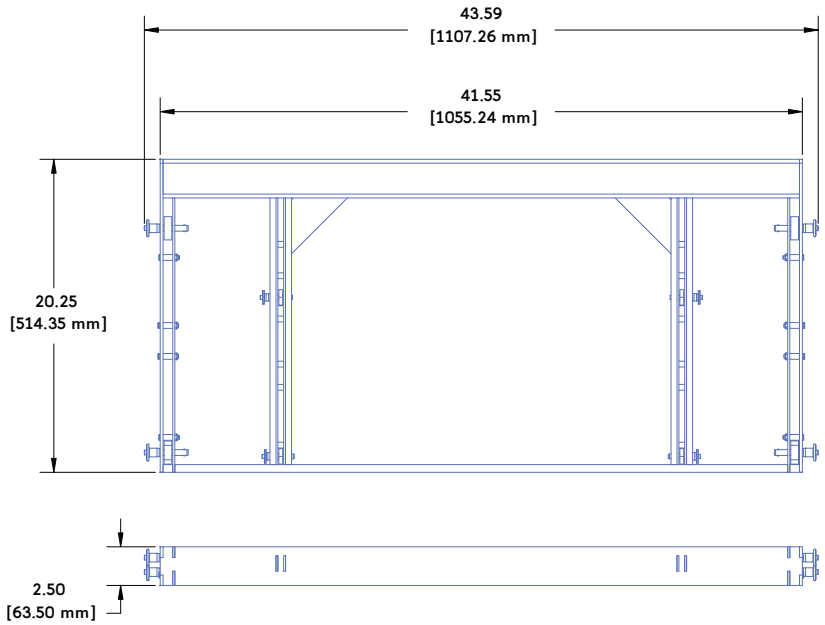

MTF-MICA/M'elodie Transition Frame Weight: 54 lbs (24.50 kg)

LOAD RATINGS

The load ratings for the MTF-MICA/M'elodie in this assembly guide take the following into consideration.

Prerequisite Conditions

The following conditions must be met to achieve the load ratings shown in Table 4.

- The tilt of the array must be no larger than the one achieved by the natural rotation of the array.
- The array is not pulled from points other than the ones on the top grid and no pull-back point should be used for tilting the array.
- The maximum number of M'elodie loudspeakers that may be hung in each configuration is based on the M'elodie weight of 62 lbs (28.12 kg).
- The load ratings and maximum weights allowed regard the MTF-MICA/M'elodie grid and flown loudspeakers as a system, including links and pins. Thus, the maximum stress point could change from one element to another in the system.

CAUTION: Do not exceed the maximum rated weight for the MICA or 600-HP top grid (MG-MICA multipurpose grid) with combined MICA/600-HP, MTF transition frame, M'elodie, and any other elements in the array. For information on the MG-MICA load rating, please consult the MG-MICA Multipurpose Grid Assembly Guide (Part #05.147.034.01).

CAUTION: Always use properly rated rigging hardware. The use of 5/8" shackles for the MG-MICA grid's pickup points is recommended.

Table 4. MTF-MICA/M'elodie load ratings		
Factor of Safety	5:1	7:1
Total Suspended Weight	868 lbs (393.7 kg)	620 lbs (281.2 kg)
M'elodie Equivalent Cabinets	14	10
Maximum Grid Tilt	-45° to +45°	-45° to +45°

NOTE: The transition frame will be adequate to withstand an array of 12 M'elodies (744 lbs, 337.4 kg) under a 7:1 safety factor with the following limitation:
Limited to 15 degrees maximum accumulative splay angle in the top half (6 M'elodies closest to the frame)

NOTE: In order to achieve the ratings in Table 4, the following conditions need to be met:

- The grid tilt angle can not be greater than the angles in the table with respect to the horizontal. Negative angles are downtilt and positive angles are uptilt angles.
- The array is not pulled from points other than the ones on the top MG-MICA grid.
- No pull-back point is used for tilting the array.

CAUTION: Do not exceed the maximum rated weight underneath the MTF-MICA/M'elodie transition frame.

USING THE MTF-MICA/MG-M'ELODIE TRANSITION FRAME TO FLY M'ELODIE UNDERNEATH A MICA ARRAY

When using M'elodie enclosures as downfill in a MICA array, the MTF-MICA/M'elodie transition frame is used between the lowest MICA and the first M'elodie in the combined array.

Please note that the transition frame receives the AlignALinks from MICA and the M'elodie is attached using MTF-M'elodie links.

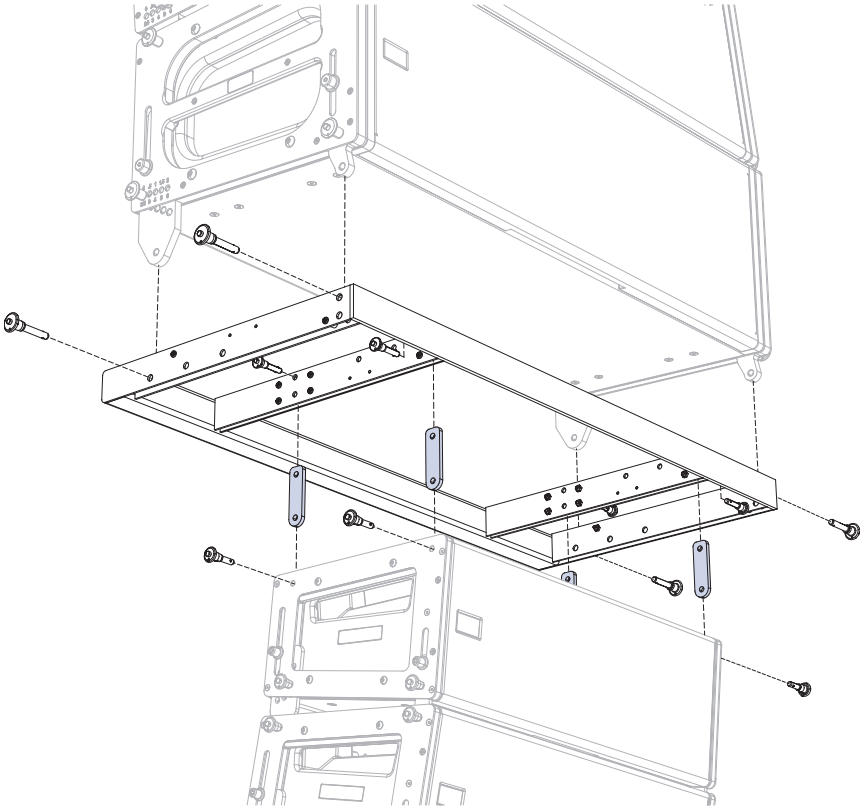

In this application, the transition frame allows angles from 0 to -20 degrees between the MICA and the M'elodie beneath it. These positions are the result of the combination of the angle between the MICA and the frame, and the frame and the first M'elodie. These angles can be adjusted independently, yielding a large number of possibilities.

MICA-MTF frame angle

This angle can be varied using MICA's rear link positions to achieve 0, -0.5, -1, -1.5, -2, -2.5, -3, and -4 degrees.

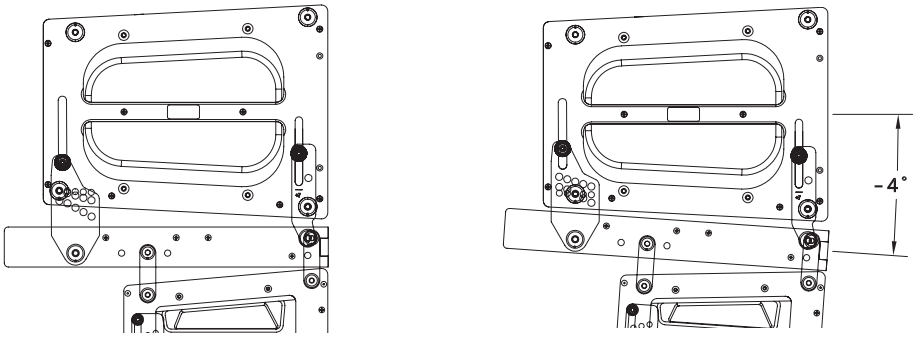

MICA and MTF frame at 0 degrees (left) and -4 degrees (right)

In addition, using the extended position on the MICA's front link and positions 0-3 on the rear link, you can achieve from -7 to -10 degrees between the MICA and the MTF frame.

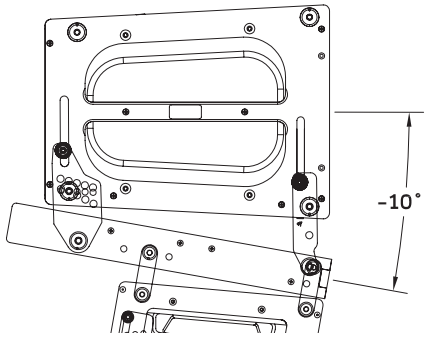

MICA and MTF frame at -10 degrees

MTF frame-M'elodie angle

There are three possible angles: 0, -5, and -10 degrees, which can be achieved by inserting the connecting links into the lower or upper holes of the frame.

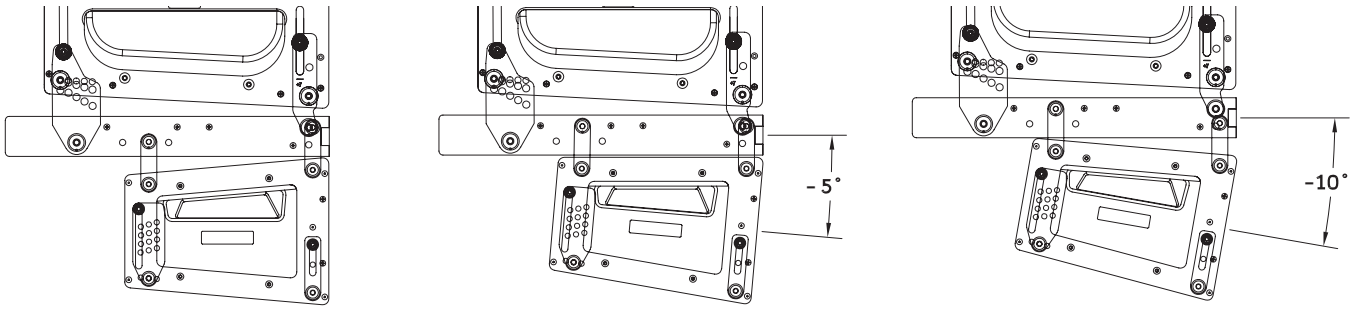

MTF frame and M'elodie at 0, -5, and -10 degrees

The resultant angle is the sum of the angles between the MICA and the MTF frame and the MTF frame and the M'elodie underneath. Please refer to Table 5.

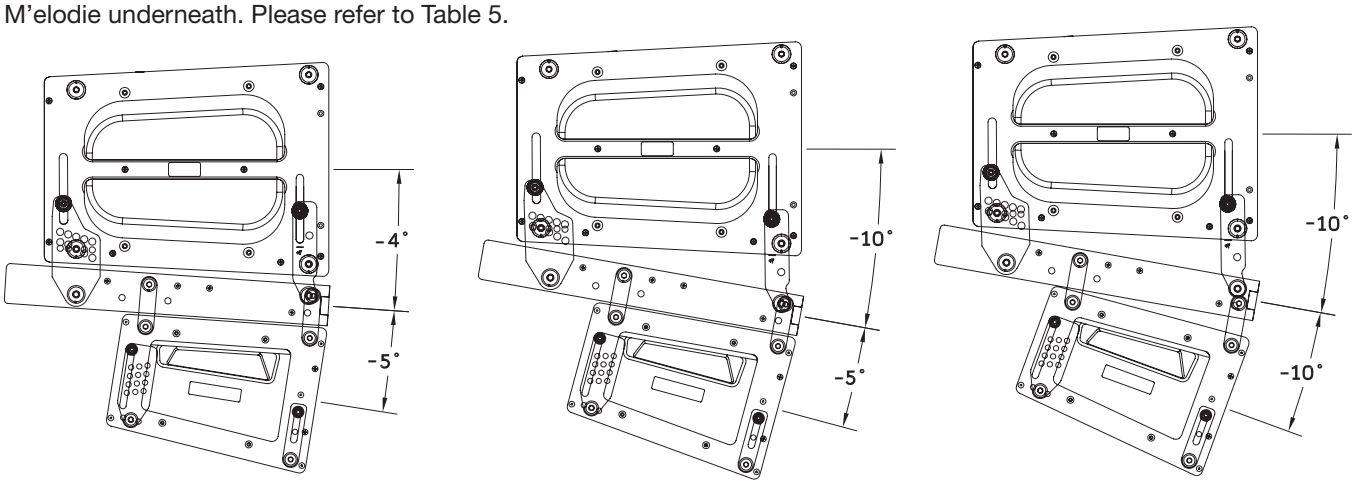

Positions to achieve -9, -15, and -20 degrees between MICA and M'elodie

Table 5. Possible angles, MICA/M'elodie configuration*

MICA-MTF angle	MTF-M'elodie angle	Resultant MICA-M'elodie angle
0	0	0
-0.5	0	-0.5
-1	0	-1
-1.5	0	-1.5
-2	0	-2
-2.5	0	-2.5
-3	0	-3
-4	0	-4
0	-5	-5
-0.5	-5	-5.5
-1	-5	-6
-1.5	-5	-6.5
-2	-5	-7
-2.5	-5	-7.5
-3	-5	-8
-8.5	0	-8.5
-4	-5	-9
0	-10	-10
-0.5	-10	-10.5
-1	-10	-11
-1.5	-10	-11.5
-2	-10	-12
-2.5	-10	-12.5
-3	-10	-13
-8.5	-5	-13.5
-4	-10	-14
-10	-5	-15
-7	-10	-17
-7.5	-10	-17.5
-8	-10	-18
-8.5	-10	-18.5
-9	-10	-19
-10	-10	-20

**Negative angles denote downtilt.*

CAUTION: Do not exceed the maximum rated weight underneath the MTF-MICA/M'elodie transition frame.

CAUTION: Do not exceed the maximum rated weight for the MICA's MG-MICA multipurpose grid with combined MICAs, transition frame, M'elodies, and any other elements in the array. For information on the MG-MICA load rating, please consult the MG-MICA Multipurpose Grid Assembly Guide.

USING THE MTF-MICA/MG-M'ELODIE TRANSITION FRAME TO FLY M'ELODIE UNDERNEATH A 600-HP ARRAY

When using full-range combined arrays with 600-HP subwoofers at the top of the array and M'elodie enclosures below, the MTF-MICA/M'elodie transition frame is used between the lowest 600-HP subwoofer and the first M'elodie in the combined array.

Please note that the transition frame receives the AlignALinks from the 600-HP and the M'elodie is attached by using the MTF-M'elodie links.

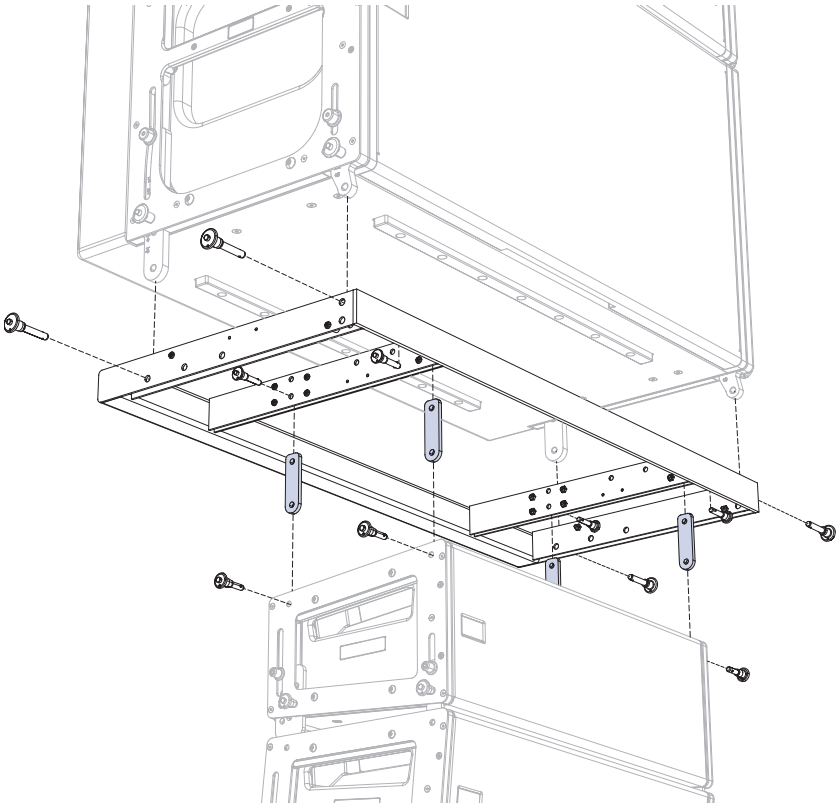

In this application, the transition frame allows angles from +15 degrees (uptilt) to -13 degrees (downtilt) between a 600-HP and the M'elodie beneath it. The uptilt is useful in applications where the array of subwoofers need to be at 0 degrees but the first M'elodies in the array need to be uptilted with respect to the 600-HP subwoofers.

These positions are available as the result of the combination of the angle between the bottom 600-HP and the frame, and the frame and first M'elodie. These angles can be adjusted independently, yielding a large number of possibilities.

600-HP-MTF frame angle

This angle can be varied in increments of 3 degrees using the 600-HP's rear link positions to achieve 0, 3, 6, 9, 12, and 15 degrees.

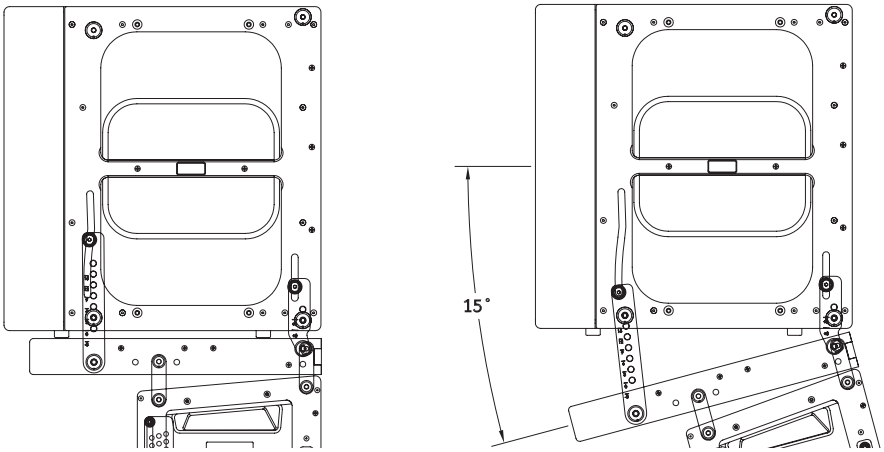

600-HP and MTF frame at 0 degrees (left) and +15 degrees (right)

In addition, using the extended position on the 600-HP's front link and position 0 on the rear link you can achieve -3 degrees between the 600-HP and the MTF frame.

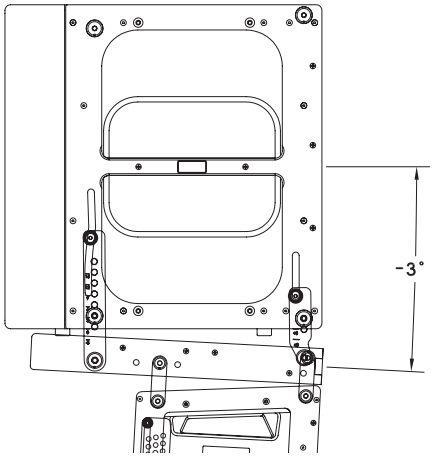

600-HP and MTF frame at -3 degrees

MTF frame-M'elodie angle

There are three possible angles: 0 , -5, and -10 degrees, which can be achieved by inserting the connecting links into the lower or upper holes of the frame.

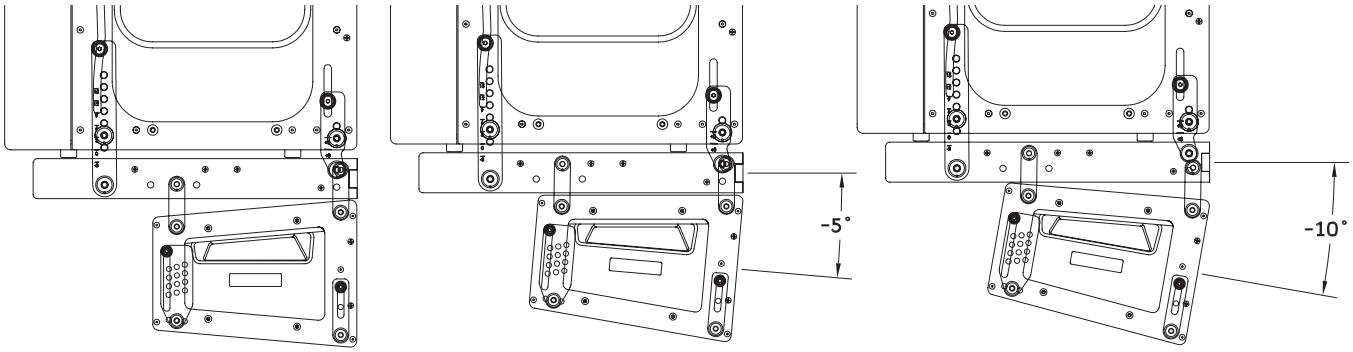

MTF frame and M'elodie at 0, -5, and -10 degrees (right)

The resultant angle is the addition of the angles between the 600-HP and the MTF frame and the MTF frame and the M'elodie underneath. See Table 6 on the following page.

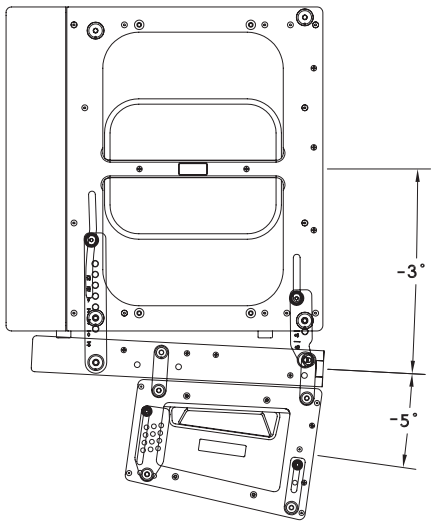

The resultant angle is the combination of both angles, in this example -8 degrees

Table 6. Possible angles, 600-HP/Melodie flown configuration*

600-HP-MTF angle	MTF-M'elodie angle	Resultant 600-HP/ M'elodie angle
-3	-10	-13
0	-10	-10
-3	-5	-8
3	-10	-7
0	-5	-5
6	-10	-4
-3	0	-3
3	-5	-2
9	-10	-1
0	0	0
6	-5	1
12	-10	2
3	0	3
9	-5	4
15	-10	5
6	0	6
12	-5	7
9	0	9
15	-5	10
12	0	12
15	0	15

**Negative angles denote downtilt, positive denote uptilt*

CAUTION: Do not exceed the maximum rated weight underneath the MTF-MICA/M'elodie transition frame.

CAUTION: Do not exceed the maximum rated weight for the 600-HP's MG-MICA multipurpose grid with combined 600-HP, transition frame, M'elodies, and any other elements in the array. For information on the MG-MICA load rating, please consult MG-MICA Multipurpose Grid Assembly Guide.

USING THE MTF-MICA/MG-M'ELODIE TRANSITION FRAME TO GROUND-STACK M'ELODIE ON TOP OF A 600-HP ARRAY

When using full-range combined arrays with 600-HP subwoofers ground-stacked at the bottom of the array and M'elodie enclosures above, the MTF-MICA/M'elodie transition frame is used between the top 600-HP subwoofer and the first M'elodie in the combined array.

Please note that the transition frame receives the AlignALinks from the M'elodie and the 600-HP is attached by using the MTF-600-HP links.

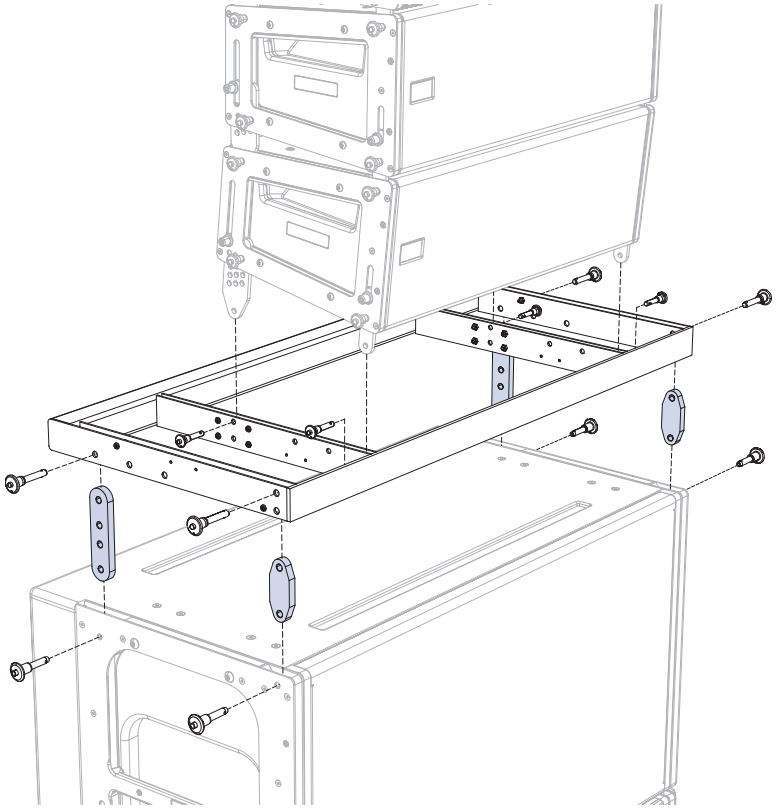

The transition frame in this application allows angles from +10 degrees (uptilt) to -11.5 degrees (downtilt) between a 600-HP and the M'elodie on top of it. The flexibility to do uptilt or downtilt is useful to cover a wide variety of applications where the array of subs need to be at 0 degrees (recommended for stability of the ground-stacked array) but the first M'elodies in the array need to be uptilted or downtilted with respect to the 600-HP subwoofers.

These positions are available as the result of the combination of the angle between the M'elodie and the frame, and the frame and the 600-HP. These angles can be adjusted independently, yielding a large number of possibilities.

M'elodie-MTF frame angle

This angle can be continuously varied in 1-degree increments by inserting the rear M'elodie link in the top rear hole of the frame. The top position on the M'elodie rear link (labeled 0) will give -5 degrees (downtilt) and the hole one up from the bottom position (labeled 10) will give +6 degrees (uptilt).

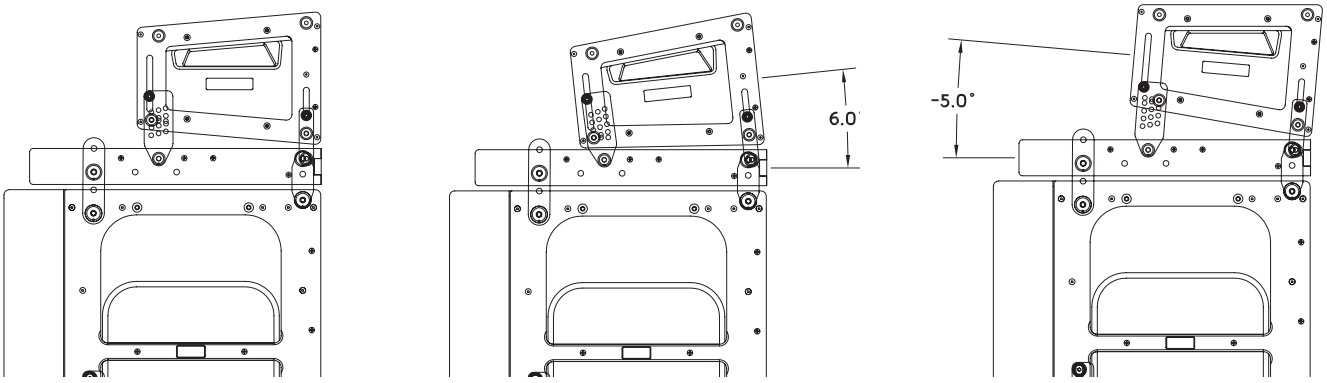

M'elodie and MTF frame at 0 degrees (left), +6 degrees (center), and -5 degrees (right)

MTF frame-600-HP angle

There are three possible angles: 0, +4 (uptilt) degrees, and -6.5 (downtilt), which can be achieved using the available holes in the front and rear MTF-600-HP links.

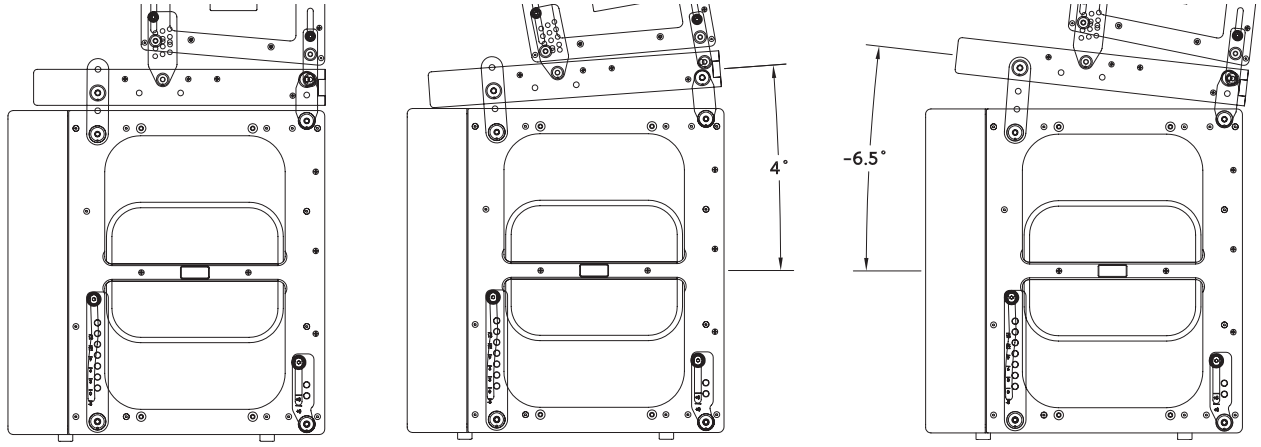

MTF frame and 600-HP at 0 degrees (left), +4 degrees (center), and -6.5 degrees (right)

The resultant angle is the addition of the angles between the M'elodie and the MTF frame and the MTF frame and the 600-HP underneath. See Table 7.

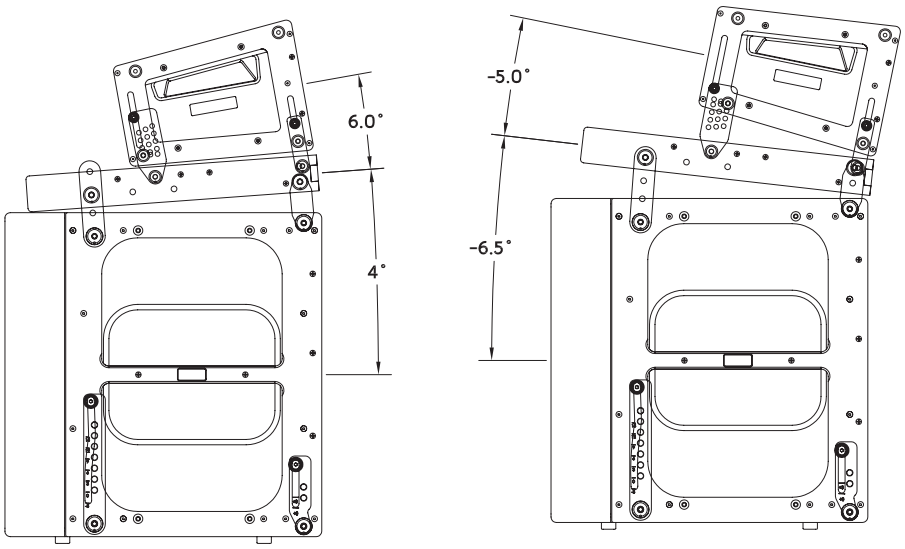

Positions to achieve +10 and -11.5 degrees between M'elodie and 600-HP

CAUTION: It is recommended to use the MG-MICA multipurpose grid as a base for the 600-HP to form a secure base.

CAUTION: Up to four (4) M'elodie loudspeakers can be easily ground-stacked on top of two (2) 600-HP subwoofers. Because of the increased difficulty of stacking more than this quantity, as well as for safety reasons, avoid ground-stacking more M'elodie loudspeakers.

CAUTION: To further secure larger ground-stacked arrays, particularly in outdoor situations, use a tie down or weight on the grid and/or a safety system on the array.

Table 7. Possible angles, M'elodie/600-HP ground-stacked configuration*

M'elodie-MTF Angle	MTF-600-HP Angle	Resultant M'elodie-600-HP angle
-5	-6.5	-11.5
-4	-6.5	-10.5
-3	-6.5	-9.5
-2	-6.5	-8.5
-1	-6.5	-7.5
0	-6.5	-6.5
1	-6.5	-5.5
-5	0	-5
2	-6.5	-4.5
-4	0	-4
3	-6.5	-3.5
-3	0	-3
4	-6.5	-2.5
-2	0	-2
5	-6.5	-1.5
-1	0	-1
6	-6.5	-0.5
0	0	0
1	0	1
2	0	2
3	0	3
4	0	4
5	0	5
6	0	6
3	4	7
4	4	8
5	4	9
6	4	10

**Negative angles denote down tilt, positive denote uptilt*

7. MCF-M'ELODIE CASTER FRAME

The MCF-M'elodie caster frame allows you to transport stacks of up to five (5) M'elodie enclosures. The M'elodie GuideALinks connect the enclosures securely to the frame, allowing the convenient transport of straight or splayed stacks of M'elodie. The steel frame surrounding the board facilitates the use of forklifts.

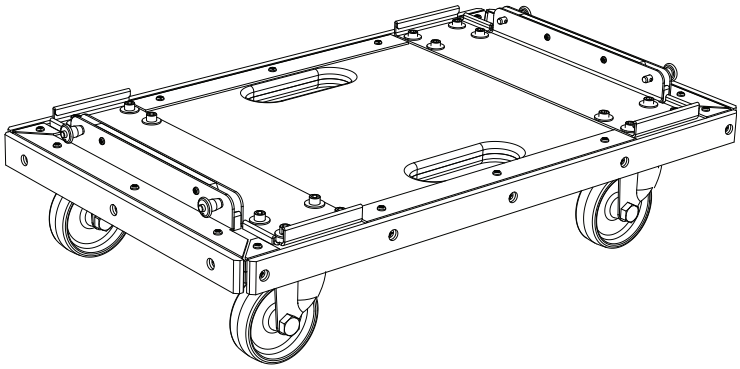

NOTE: Always use the included 5/16" x 0.875" quick-release pins (with red button) in the provided holes to connect the lowest M'elodie enclosure to the caster frame.

List of Contents: MCF-M'elodie Caster Frame Kit (Part # 40.152.052.01)
Required for use with M'elodie loudspeaker(s)

	Qty	Part Number	Description
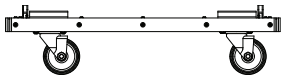	1	40.152.052.01	MCF-M'elodie Caster Frame
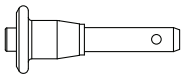	4	134.025	5/16" x 0.875" Quick-Release Pins (red button and lanyard)

MCF-M'elodie Caster Frame Dimensions:

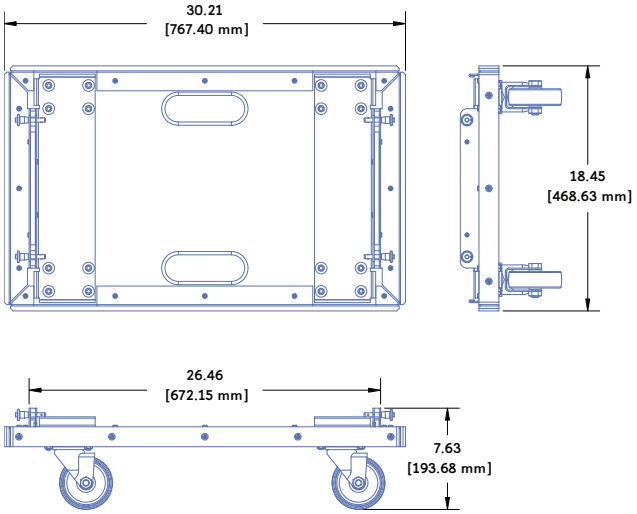

MCF-M'elodie Caster Frame Weight: 39 lbs (17.70 kg)

Whether you're deploying or striking an array, the MCF-M'elodie can temporarily support the entire array — making it easy to assemble or disassemble the array in stacks of up to five (5) M'elodies.

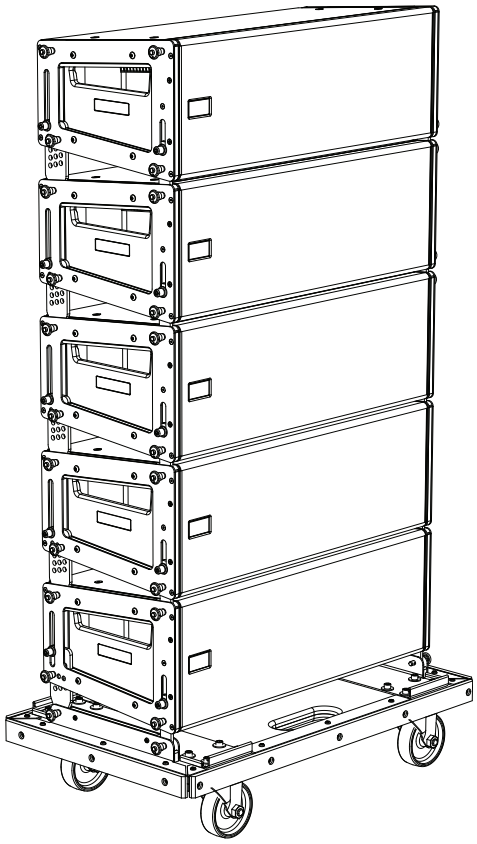

CAUTION: Do not exceed **five (5)** M'elodie cabinets high to avoid tipping over the stack.

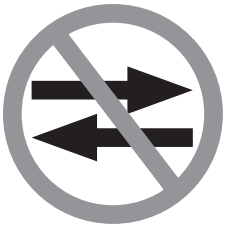

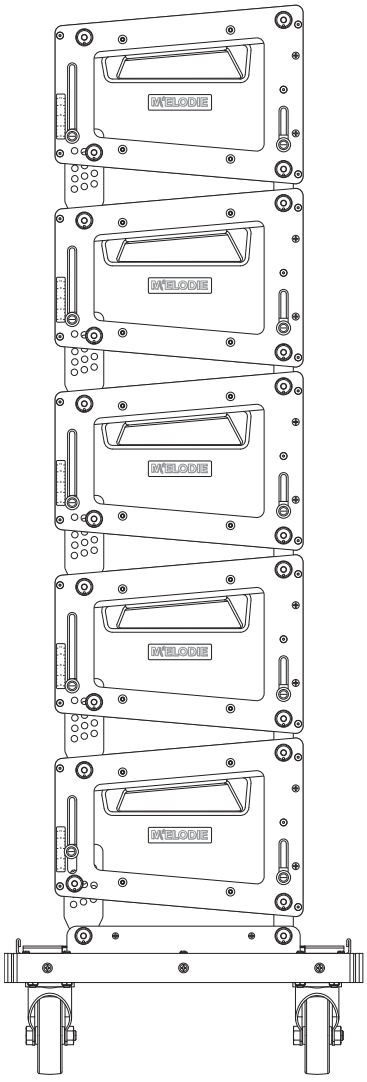

CAUTION: Avoid moving the M'elodie stack in the front-to-back direction of the loudspeakers (the long side); always move the stack sideways to avoid tipping it over.

The M'elodie GuideALinks allow multiple transport angles with the MCF-M'elodie caster frame.

- Use the 5 position on the M'elodie rear GuideALink to get the first M'elodie with respect to the caster frame at 0 degrees. This setting is preferred when all M'elodies are at 0 degrees.
- Use the 0 position to downtilt the first M'elodie with respect to the caster frame, to compensate if the rest of the M'elodies in the stack have angles.

CAUTION: The use of severe angles between M'elodies makes the stack less stable. When possible, transport the stack with all M'elodies as close as possible to 0 degrees with respect to the caster frame to avoid tipping over the stack.

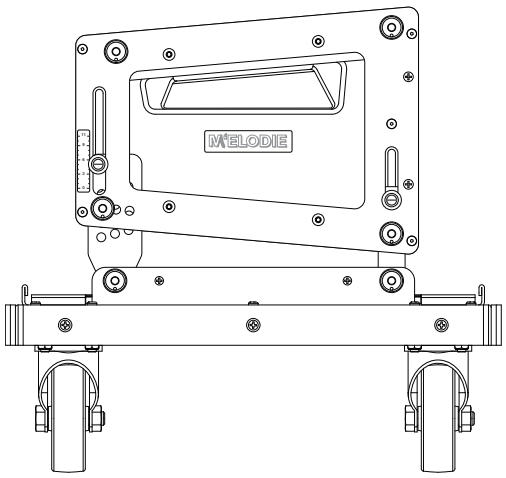

First M'elodie at 0 degrees (straight up) with respect to the MCF-M'elodie

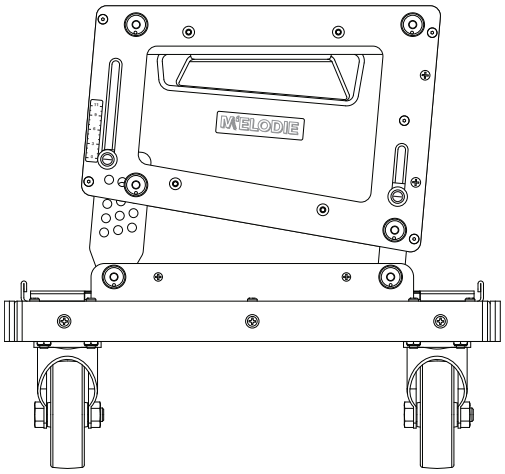

First M'elodie at -5 degrees (downtilted) with respect to the MCF-M'elodie

Table 8. M'elodie rear link positions to MG-M'elodie (ground-stacked)

M'elodie rear link position	Angle with respect to MCF-M'elodie
0	-5°
1	-4°
2	-3°
3	-2°
4	-1°
5	0°
6-11	Not recommended

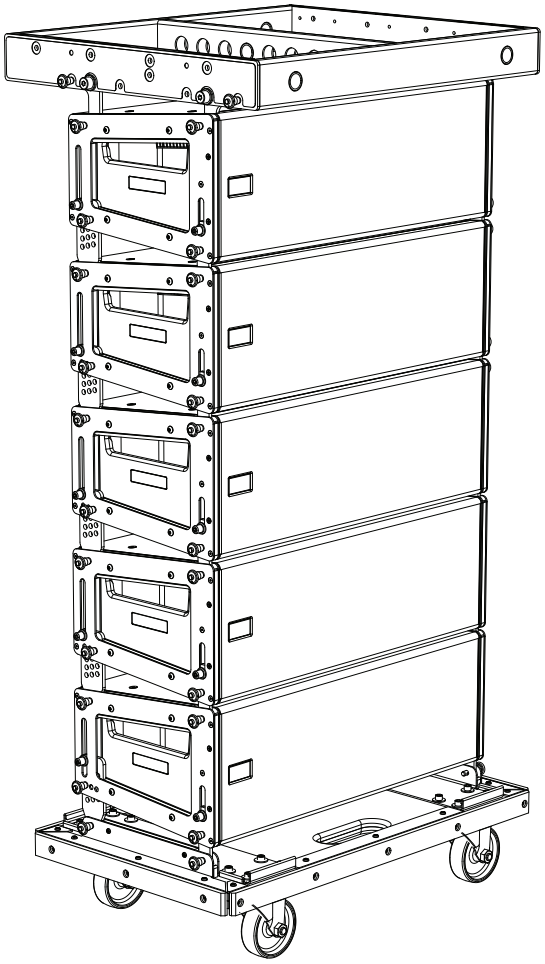

TIP: The MG-M'elodie can travel installed on top of a M'elodie stack.

CAUTION: The use of severe angles between M'elodies makes the stack less stable. If an MG-M'elodie grid is being transported on top of the stack, set all M'elodies at 0 degrees with respect to the caster frame to avoid tipping over the stack.

CAUTION: When using the MCF-M'elodie caster frame to ground-stack M'elodie loudspeakers, make sure all four caster wheels are blocked to prevent the stack from rolling away.

Other rigging accessories, as well as a range of rugged protective transport covers, are available. For more information, please visit www.meyersound.com.

8. THE MUB-M'ELODIE MULTIPURPOSE U-BRACKET

The MUB-M'elodie multipurpose U-bracket is primarily designed to support and aim a single M'elodie loudspeaker in a floor- or ceiling-mounted configuration (it can also be mounted on a pole mount). However, it is robust and versatile enough for stacking and flying arrays of up to three M'elodie loudspeakers. Multiple mounting holes provide maximum flexibility for the loudspeaker's tilt.

The MUB-M'elodie U-bracket does not have the strength or functionality of a rigging grid and is therefore NOT recommended for ground-stacking or flying arrays that contain more than three M'elodie loudspeakers. For these applications, the MG-M'elodie multipurpose grid is recommended.

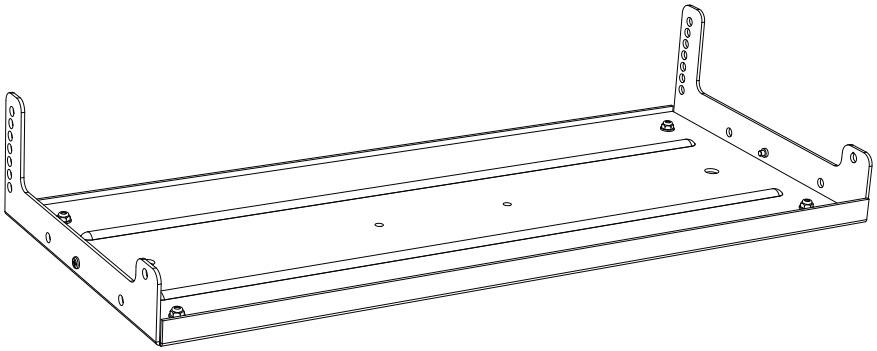

List of Contents: MUB-M'elodie Multipurpose U-Bracket (Part # 40.152.100.01)
Required for use with M'elodie loudspeaker(s)

	Qty	Part Number	Description
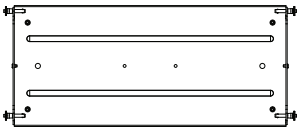	1	40.152.100.01	MUB-M'elodie Multipurpose U-Bracket
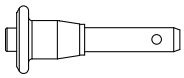	4	134.025	5/16" x 0.875" Quick-Release Pins (red button and lanyard)
	4	124.091	Rubber Feet (for floor-mounting)
	4	109.545	10-24 Locking Nuts (for use with rubber feet)
	4	113.008	Flat Washers (for use with rubber feet)

MUB-M'elodie Multipurpose U-Bracket Dimensions:

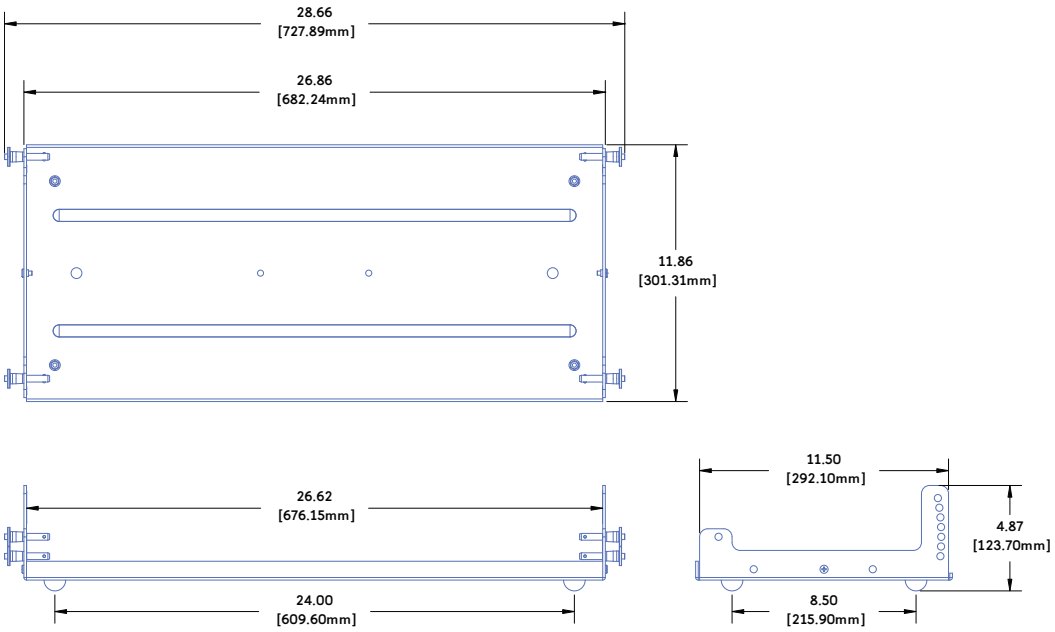

MUB-M'elodie Multipurpose U-Bracket Weight: 13 lbs (5.90 kg)

LOAD RATINGS

CAUTION: When flying an array from the MUB-M'elodie U-bracket, it must always be supported by mounting holes on the end of the bracket. The 1/4" center holes are only to be used with a stand mount adaptor.

CAUTION: Always use mounting hardware that is appropriate for the surface where the MUB-M'elodie multipurpose U-bracket will be installed, and that has been rated to meet or exceed the weight of the installed loudspeakers.

Two 1/2" Center Holes

7:1 safety factor: Up to three M'elodies (186 lbs, 84.37 kg)

NOTE: The load must be evenly distributed on the two points.

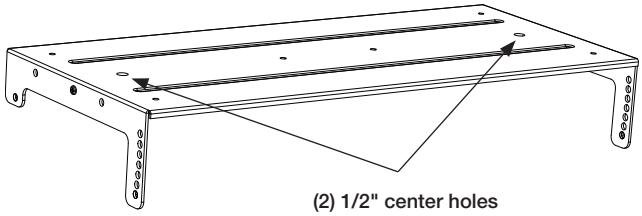

Four 1/4" Corner Holes

7:1 safety factor: Up to three M'elodies (186 lbs, 84.37 kg)

NOTE: The load must be evenly distributed on all four points.

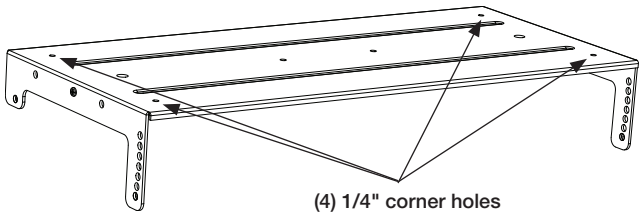

Two 1/4" Center Holes

NOT RATED FOR FLOWN APPLICATIONS

CAUTION: Center holes are only to be used with a stand mount adaptor.

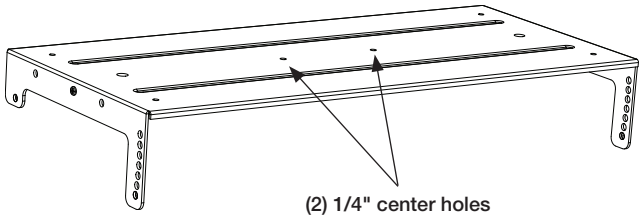

MUB-M’ELODIE ANGLE SETTINGS

One end of the MUB-M’elodie U-bracket has seven holes to allow for a range of angles for the attached M’elodie cabinet. The U-bracket holes align with those in the M’elodie. Red quick-release pins — included with each M’elodie loudspeaker — are used to secure the M’elodie (two per side) to the MUB-M’elodie U-bracket.

A variety of tilt angles are possible with the different pin positions and the placement of the MUB-M’elodie U-bracket (forward or reversed). Figure 8.3 shows the available angles for both floor- and ceiling-mount configurations. For ceiling-mount configurations and flown arrays, positive angles are used for uptilt and negative angles are used for downtilt. For floor-mount configurations, positive angles are used for uptilt and negative angles are used for downtilt.

Floor Mount Forward	Floor Mount Reversed	Hang Mount Forward	Hang Mount Reversed
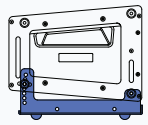	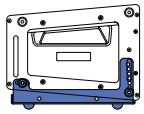	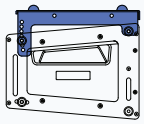	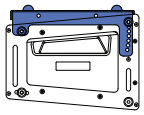
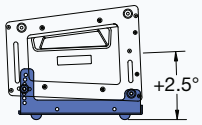	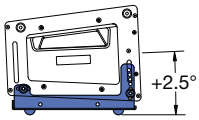	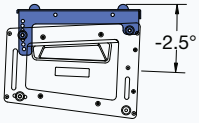	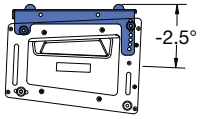
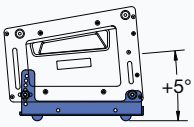	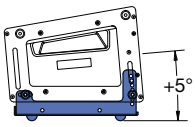	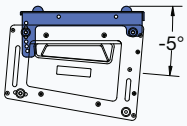	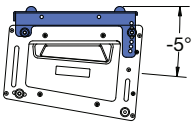
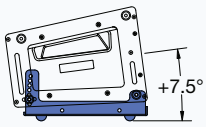	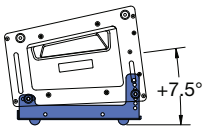	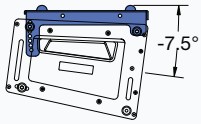	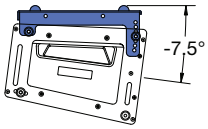
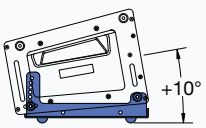	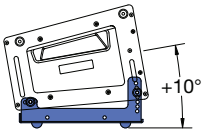	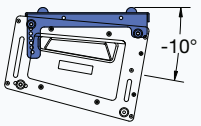	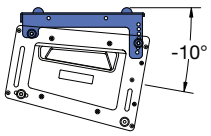
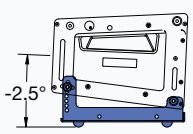	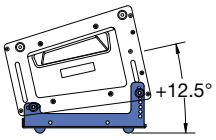	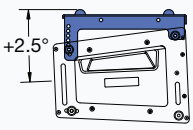	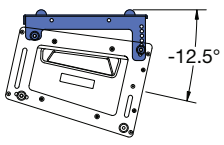
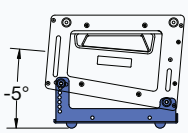	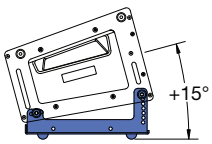	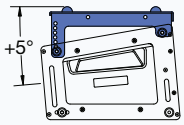	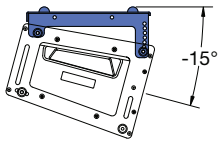

MUB-M’ELODIE FLOOR-MOUNT CONFIGURATIONS

The MUB-M’elodie U-bracket can be mounted to a floor to aim a single M’elodie loudspeaker, or it can be used for stacking up to three (3) M’elodie loudspeakers. The tilt of the M’elodie attached to the MUB-M’elodie U-bracket can be from -5 to +15 degrees in 2.5-degree increments.

When floor mounting a single M’elodie loudspeaker, if it is not necessary to secure the MUB-M’elodie to the floor with fasteners you can attach the four rubber feet included with the MUB-M’elodie to its four corner holes to prevent the U-bracket from sliding. When floor mounting a stack of two (2) or three (3) M’elodie loudspeakers, the MUB-M’elodie should be secured to the floor with fasteners placed in the bracket’s four corner holes. Make sure to use fastening hardware appropriate for the floor surface.

The M’elodie is attached to the MUB-M’elodie U-bracket at the desired tilt angle, and secured with four red quick-release pins. A second M’elodie can be attached to the first M’elodie with the front and rear GuideALinks; a third M’elodie can be attached to the second M’elodie in the same manner.

CAUTION: Always use red button pins (5/16" x 0.875") to secure the MUB-M’elodie. Do not use the standard M’elodie black button pins (5/16" x 0.63") since they are shorter and will not lock in place.

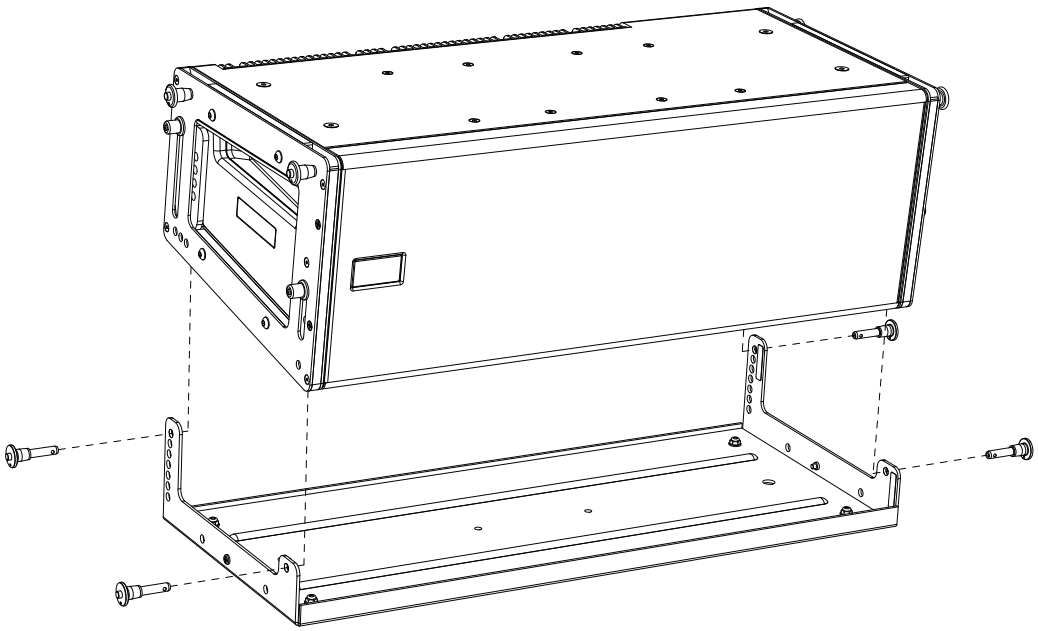

MUB-M'ELODIE CEILING-MOUNT CONFIGURATIONS

The MUB-M'elodie U-bracket can be mounted to a ceiling with up to three (3) M'elodie loudspeakers attached. The tilt of the M'elodie attached to the MUB-M'elodie U-bracket can be from +5 to -15 degrees in 2.5-degree increments.

The MUB-M'elodie U-bracket must be safely secured to the ceiling with fasteners placed in the bracket's four 1/4" corner holes. Make sure to use fastening hardware appropriate for the ceiling surface and rated to meet or exceed the weight of the loudspeakers being hung. The M'elodie is attached to the MUB-M'elodie U-bracket, at the desired tilt angle, and secured with four red quick-release pins. A second M'elodie can be attached to the first M'elodie with the front and rear GuideALinks; a third M'elodie can be attached to the second M'elodie in the same manner.

CAUTION: Always use red button pins (5/16" x 0.875") to secure the MUB-M'elodie. Do not use the standard M'elodie black button pins (5/16" x 0.63") since they are shorter and will not lock in place.

CAUTION: Always use mounting hardware that is appropriate for the surface where the MUB-M'elodie multipurpose U-bracket will be installed, and that has been rated to meet or exceed the weight of the installed loudspeakers.

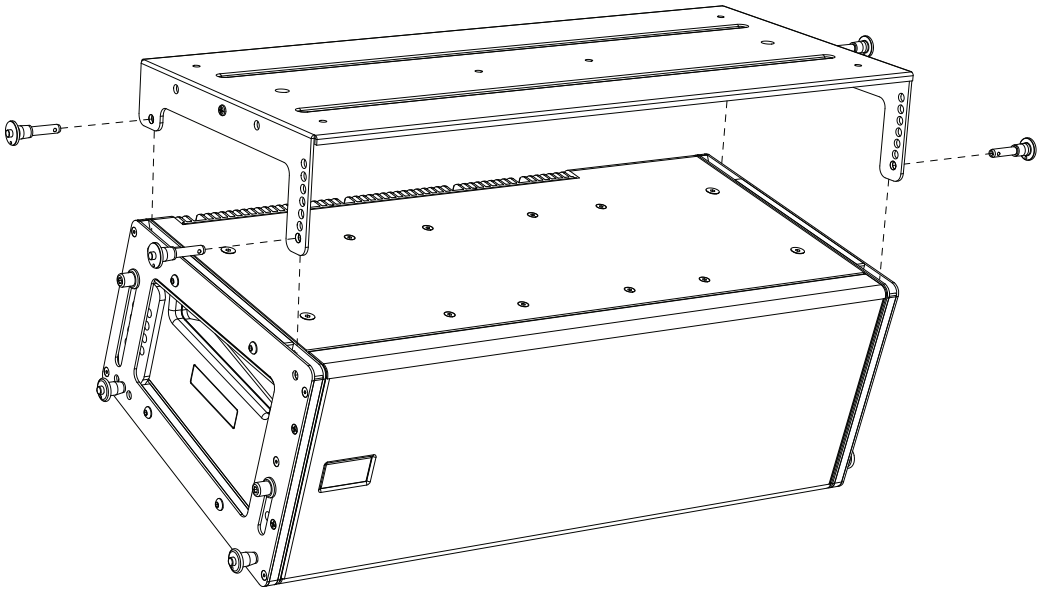

MUB-M'ELODIE ON A POLE-MOUNT STAND

You can use the MUB-M'elodie U-bracket with a third-party pole adapter (available from Ultimate Support, for example) to mount one (1) M'elodie loudspeaker on a pole. The tilt of the M'elodie attached to the MUB-M'elodie U-bracket can be from -5 to +15 degrees in 2.5-degree increments.

The MUB-M'elodie U-bracket is secured to the pole adapter with fasteners placed in the bracket's two 1/4" center holes. The M'elodie is attached to the MUB-M'elodie U-bracket at the desired tilt angle, and secured with four red quick-release pins.

CAUTION: Always use red button pins (5/16" x 0.875") to secure the MUB-M'elodie. Do not use the standard M'elodie black button pins (5/16" x 0.63") since they are shorter and will not lock in place.

CAUTION: Make sure the pole and adaptor is designed to support the total weight of the M'elodie loudspeaker and observe all safety precautions specified by the pole manufacturer.

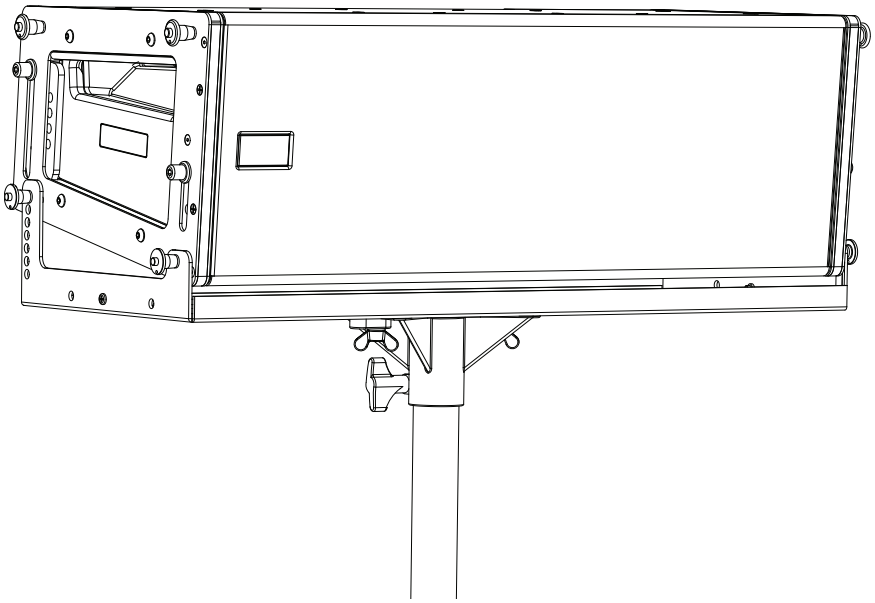

CAUTION: Do not place more than one (1) M'elodie loudspeaker on a stand or pole.

MUB-M’ELODIE FLOWN CONFIGURATIONS

The MUB-M’elodie supports flown arrays of up to three (3) M’elodie loudspeakers. The tilt of the M’elodie attached to the MUB-M’elodie U-bracket can be from +5 to -15 degrees in 2.5-degree increments.

The MUB-M’elodie U-bracket can be clamped to a truss using its two 1/2" center holes on the top of the bracket, or the MUB-M’elodie can be suspended with four eyebolts attached to the bracket’s four corner holes. Make sure to use rigging hardware rated to meet or exceed the weight of the loudspeakers being hung. The first M’elodie in the array is attached to the MUB-M’elodie U-bracket, at the desired tilt angle, and secured with four red quick-release pins. The second M’elodie can be attached to the first M’elodie with the front and rear GuideALinks; a third M’elodie can be attached to the second M’elodie in the same manner.

CAUTION: Always use red button pins (5/16" x 0.875") to secure the MUB-M’elodie. Do not use the standard M’elodie black button pins (5/16" x 0.63") since they are shorter and will not lock in place.

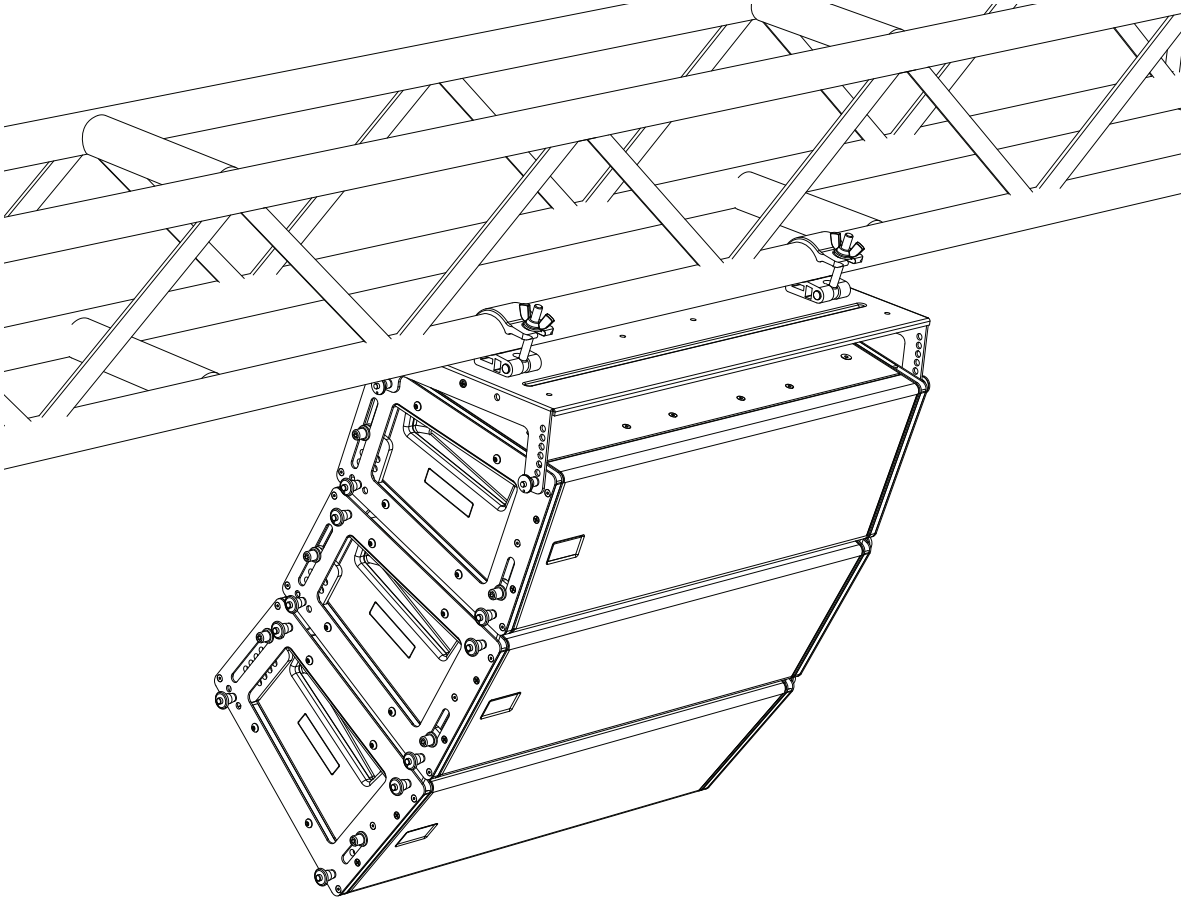

APPENDIX: ASSEMBLING AN ARRAY OF M'ELODIES TO THE MG-M'ELODIE GRID

1. Lay the MG-M'elodie grid on the floor or road trunk in the approximate location where the rigging point(s) have been established and the motor(s) hung. Orient the grid for the desired configuration:

   Rear flown: Most useful for achieving a few degrees more of uptilt, labeled "Maximum Up-tilt" (M'elodie is closer to the rear of the grid)

   Front flown: Helps achieving a few more degrees of downtilt, labeled "Maximum Down-tilt" (M'elodie is closer to the front of the grid)

   Attach 5/8" shackles to the desired point(s) on the MG-M'elodie grid.

NOTE: It is recommended that a 2-foot length of wire rope between the shackle(s) and the motor hook(s) be utilized to prevent the chain bag(s) from obstructing the high-frequency elements in the top M'elodie loudspeakers.

---

2. Lower the motor(s) so that the motor chain hook(s) can be connected to the 5/8" shackle(s). Once secured, raise the grid to slightly higher than the first stack of M'elodie loudspeakers to be linked.
3. Unstow the grid links and pin them for the desired M'elodie angle with respect to the grid (0, -5, or -10 degrees). Ensure that one red-button pin is securing each of the links to the grid.
4. Roll the first M'elodie stack into position under the grid on its MCF-M'elodie caster frame. Up to five (5) M'elodie loudspeakers can be transported on the caster frame.
5. Lower the grid to within approximately an inch of the top M'elodie enclosure, move the M'elodie stack so that the link pockets line up with the grid links, and bump the motors down. The links will nest in all four pockets of the top M'elodie loudspeaker. Pin the links to the M'elodie using the M'elodie 5/16" x 0.63" quick-release pins (with black buttons).
6. Check that each link is secured to the grid with one red-button pin and the top M'elodie with one Balck-button pin per corner. Check the rest of the stack to assure that each has a black-button pin in both the upper and lower positions in all four corners where the loudspeakers link. Change and set the angles of each of these M'elodie loudspeakers as desired.

NOTE: To reduce the tension on the pins when changing angles between loudspeakers, it may be necessary to bump the motor(s) and/or lift loudspeakers by hand.

---

7. Connect the power, line-level audio, and RMS connections (or VEAM all-in-one) to each loudspeaker.
8. Raise the grid with its linked loudspeakers to slightly higher than the floor and pull the two rear red-button pins securing the lowest M'elodie cabinet's rear link to the caster frame. Rest the rear wheels of the frame on the floor and pull the two front red-button pins to detach the stack from the caster frame. Retract the GuideALinks into the lowest suspended M'elodie loudspeaker (pull the black-button pins, use the captive handle to slide the link completely into the enclosure, and re-pin it).
9. Raise the grid with its linked loudspeakers to slightly higher than the second stack of M'elodie loudspeakers, and roll the empty caster frame away.
10. Roll the next stack of M'elodie enclosures into place under the suspended array. Lower the array until it is almost touching the downstage edge of the top M'elodie to be attached. Line up the M'elodies on the caster frame so that when the links of the suspended loudspeaker are dropped, they will go directly into the link pockets.
11. Remove the black-button pins from the front link pockets on the top M'elodie loudspeaker to be attached. Pull the pins on the lowest suspended M'elodie to drop the front GuideALinks into the pockets of the top M'elodie loudspeaker being attached.

CAUTION: If the links are not stowed as described in Step 8, you run the risk of denting or penetrating the wood on the top loudspeaker in the stack by hitting it with an extended link.

12. Pin the front links first. Position and pin the rear links of the suspended M'elodie loudspeaker to the desired angle. "Bump" the motors to lower the rear GuideALinks into the link pockets of the M'elodie to be attached, and pin.
13. Repeat the previous steps until the array has been assembled. All loudspeaker-to-loudspeaker links are made with the black-button pins.

NOTE: As more loudspeakers are being added to the suspended array, keeping the grid as close to parallel as practical to the stage surface will ease the process of adding more loudspeakers to the array. This prevents the center of gravity from falling in front of the downstage motor, and making it virtually impossible to control the angle of the grid, complicating the attachment of the rear links. In some cases when the array length is longer than 10–12 loudspeakers, it may be necessary to push the suspended array toward the downstage direction and lower the array to close the gap between the rear of the flown and stacked loudspeakers.

TIP: As the flown array is being assembled and raised, the front GuideALinks on M'elodie can rotate over 30 degrees forward while pinned, facilitating the connection of the flown, angled array to the stacks of loudspeakers positioned on the caster frame.

Roll the stack in place so that the front links mate. Pin them, and then lower the array slightly so that the rear links can be pinned. Finally, unpin the caster frame from the lowest enclosure. Reverse the procedure when striking the array.

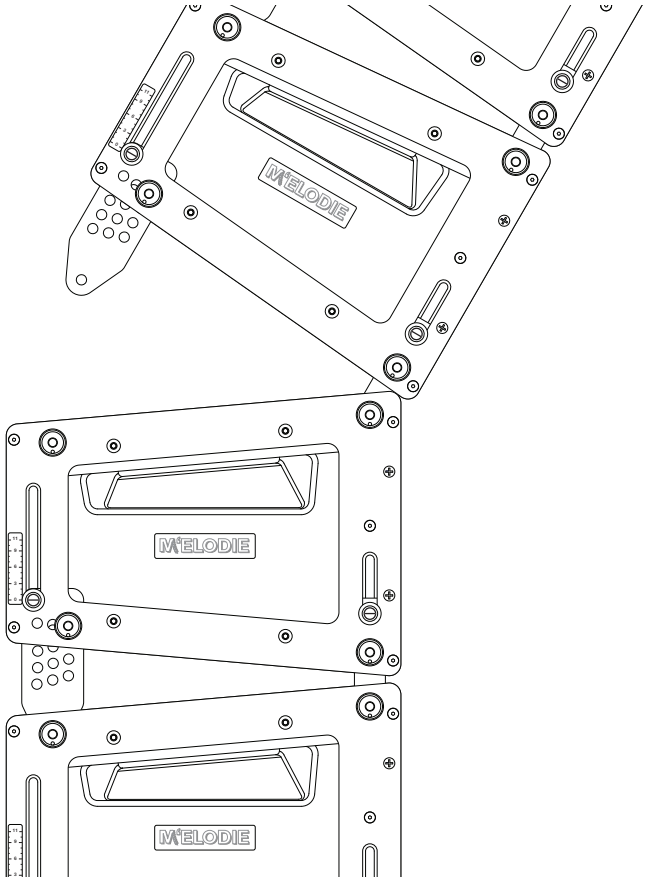



Meyer Sound Laboratories Inc.
2832 San Pablo Avenue
Berkeley, CA 94702

www.meyersound.com
T: +1 510 486.1166
F: +1 510 486.8356

© 2007
Meyer Sound Laboratories Inc.
05.152.019.01 B