MG-3D/M SPACER WASHER KIT

Meyer Sound's MG-3D/M rigging grid is designed for maximum flexibility while having a very high rigging capacity. The MG-3D/M grid accepts standard 3/4-inch rated shackles available from a number of manufacturers.

NOTE: For more information on load ratings and how to assemble and safely use the MG-3D/M, please refer to the MG-3D/M Rigging Grid and Accessories Assembly Guide, available at www.meyersound.com

Due to variances in shackle sizes there may be extra space between the shackle and the face of the MG-3D/M grid. This can cause the shackle(s) to shift, producing noise when the grid is tilted.

The MG-3D/M spacer washer kit (PN 40.132.036.02) available from Meyer Sound includes a set of four (4) washers to install (as shown) between the outer face of the grid and the shackle to close up the excess space. The washer also helps reduce wear on the grid that would otherwise occur during severe tilting.

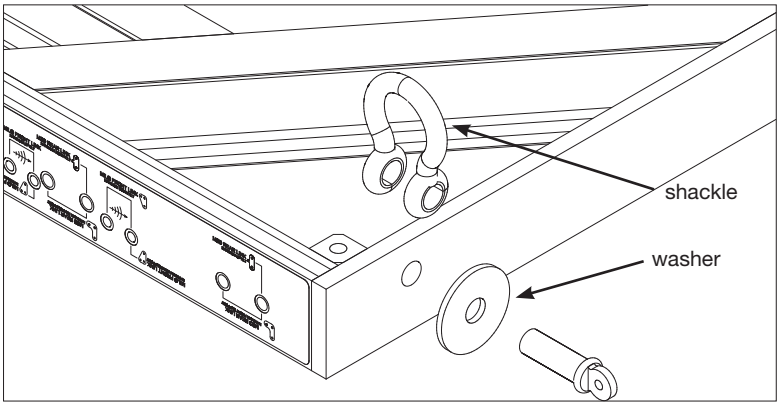

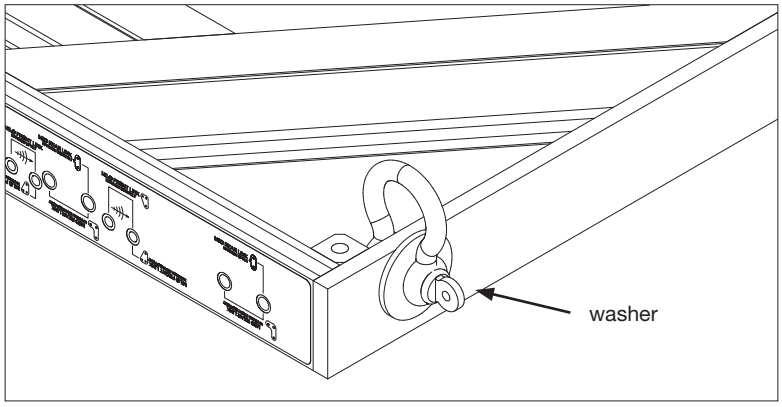

CAUTION: All Meyer Sound products must be used in accordance with local, state, federal, and industry regulations. It is the owner's and/or user's responsibility to evaluate the reliability of any rigging method for their application.

NOTE: Rigging should be carried out only by experienced professionals and using rigging hardware that has been rated to meet or exceed the weight being hung.

Meyer Sound Laboratories Inc.
2832 San Pablo Avenue
Berkeley, CA 94702

www.meyersound.com
T: +1 510 486.1166
F: +1 510 486.8356

© 2004
Meyer Sound Laboratories Inc.
All Rights Reserved

PN: 05.132.036.02
Rev: A