This Assembly Guide provides instructions on how to safely use and assemble the MG-2D multipurpose grid. The MG-2D grid is designed to provide a flexible flying or ground support solution for almost every installation of M2D compact curvilinear array loudspeakers and M2D-Sub compact subwoofers. The CamLinks, front links and various other hardware included with the MG-2D grid can be used in a number of configurations and orientations.

There are three basic configurations for the MG-2D grid, and each has a variety of adjustment depending on the links being used. The following configurations are covered in this Assembly Guide:

1. General Information 2

Safety Statement 2
MG-2D Multipurpose Grid Overview 4
Load Ratings Overview 6

2. MG-2D Multipurpose Grid in Flown Configuration 7

0° to -7° Downtilt Between MG-2D Grid and First M2D Cabinet 7
0° to 15° of Uptilt Between the MG-2D Grid and the First M2D Cabinet 8
MG-2D Grid in Reverse Flown Configuration 9

3. MG-2D Multipurpose Grid in Ground-Supported Configuration 10

0° to 7° of Uptilt Between the MG-2D Grid and First M2D Cabinet 10
0° to 15° of Uptilt Between the MG-2D Grid and First M2D Cabinet 11
M2D Downtilted over the M2D-Sub 12

4. MG-2D Multipurpose Grid As a Transition Frame 13

Transition from an M3D to an M2D 13
Transition from MILO to M2D 14

© 2003
Meyer Sound Laboratories Inc.

1. GENERAL INFORMATION

SAFETY STATEMENT

Please read this section carefully and in its entirety. It contains critical information regarding safety issues, including guidelines for general safe use of rigging systems as well as advisories on government regulations and liability laws. Meyer Sound cannot be held responsible for consequences that may ensue due to failure to read and comply with information in this section.

SCOPE OF THIS MANUAL

Although this manual contains much useful information on rigging in general, it does not claim to be a comprehensive resource on the subject. This manual assumes that the owners and/or users of a QuickFly system are knowledgeable and experienced in the areas of rigging and flying loudspeaker systems. MANY ISSUES OF CRUCIAL CONCERN, SUCH AS THE DETERMINATION OF APPROPRIATENESS AND CONDITION OF VENUE RIGGING POINTS, CANNOT BE ADDRESSED HERE. THEREFORE, THE USER MUST ASSUME ALL RESPONSIBILITY FOR THE APPROPRIATE USE OF QUICKFLY SYSTEMS IN ANY PARTICULAR LOCATION OR CIRCUMSTANCE.

The suspension of large, heavy objects in public places is subject to numerous laws and regulations at the national/federal, state/provincial, and local levels. This manual does not address the specifics of any such applicable laws and government regulations. This manual details procedures and practices consistent with those generally acknowledged as allowable and safe in the United States. However, the user must assume responsibility for making sure that use of any QuickFly system and its components in any particular circumstance or venue conforms to all applicable laws and regulations in force at the time.

LOAD RATINGS AND SPECIFICATIONS

Long-term safe operation is a central concern in the design and manufacture of any rigging/flying system. Meyer Sound has taken great care in material selection and component design. In all critical cases, load points are redundant, with a safety margin that allows one or more load points to fail while maintaining system integrity. After manufacture, all load-critical system components are individually inspected.

All load ratings and other specifications given in this manual are the result of accepted engineering practice and careful testing. However, such specifications and ratings are subject to change. USERS ARE ADVISED TO CHECK THE QUICKFLY SECTION OF THE MEYER SOUND WEBSITE AT

http://www.meyersound.com

OR CONTACT TECHNICAL SUPPORT AT REGULAR INTERVALS TO CHECK FOR UPDATED OR REVISED INFORMATION.

REGULATORY COMPLIANCE

The engineering practices and safe working load (SWL) ratings of the QuickFly system are in full compliance with all known regulatory statutes currently applicable in the United States. Unless otherwise specified, all working loads are based on a 7:1 safety factor. However, as noted above, there are wide variations internationally in the regulations and practices applying to suspension of sound systems in public places. Although regulations in the United States are generally among the most stringent, safety codes may be even stricter in a few localities (such as those highly prone to earthquakes). In addition, applicable safety codes are open to interpretation: Government officials in one location may have a stricter interpretation than another local official, even when operating under the same regulations and in the same legal jurisdiction.

CONSEQUENTLY, USERS OF QUICKFLY RIGGING SYSTEMS SHOULD BE PREPARED TO TAKE ADDITIONAL SAFETY ASSURANCE MEASURES BEYOND THOSE OUTLINED IN THIS MANUAL. IN ALL CASES, IT IS THE RESPONSIBILITY OF THE USER TO MAKE CERTAIN THAT ANY MEYER SOUND LOUDSPEAKER SYSTEM IS SUSPENDED IN ACCORDANCE WITH ALL APPLICABLE NATIONAL/FEDERAL, STATE/PROVINCIAL, AND LOCAL REGULATIONS.

© 2003
Meyer Sound Laboratories Inc.

ADVISORY NOTE: SAFETY RESPONSIBILITIES “ABOVE THE HOOK”

In most touring applications of rigging systems, the touring sound provider is normally responsible for ensuring the safety of the suspension system only below the attachment point. The safety and suitability of the attachment point is generally seen as the responsibility of the venue owner or operator. However, this distinction (“above the hook” versus “below the hook”) can be open to interpretation. Touring system operators are advised to double-check to make certain that attachment points are approved and suitably load rated, and that the points used are those identified as such by the venue owner or operator. AS AN EXTRA PRECAUTION, CAREFUL INSPECTION OF THE ATTACHMENT POINTS IS ADVISED BEFORE FLYING, PARTICULARLY IN OLDER VENUES OR THOSE HOSTING FREQUENT EVENTS USING LARGE SOUND AND LIGHTING SYSTEMS. In any case, Meyer Sound QuickFly systems are intended only for suspension from approved rigging points, each known to have ample SWL margins for the system components suspended below them.

INSPECTION AND MAINTENANCE

The Meyer Sound QuickFly systems are an assembly of mechanical devices, and are therefore subject to wear and tear over prolonged use, as well as damage from corrosive agents, extreme impact, or inappropriate use.

BECAUSE OF THE SAFETY ISSUES INVOLVED, USERS MUST ADOPT AND ADHERE TO A SCHEDULE OF REGULAR INSPECTION AND MAINTENANCE. IN TOURING APPLICATIONS, KEY COMPONENTS MUST BE INSPECTED BEFORE EACH USE. Such inspection includes examination of all load-bearing components for any sign of undue wear, twisting, buckling, cracking, rusting, or other corrosion. In regard to rust and corrosion, the main components of a QuickFly system are either protected by an exterior coating or made from stainless steel, which is impervious to rust and resistant to most corrosive fluids. Nevertheless, normal use and shipping vibrations can wear through the protective coatings, and extremely corrosive fluids (such as battery acid) can cause severe damage with prolonged exposure even to protected parts. Particular attention should be given to screws, bolts, and other fasteners to make certain the fittings are tight and secure. Metal seams and welds should be examined for any sign of separation or deformation. Meyer Sound strongly recommends that written documentation be maintained on each QuickFly system, noting date of inspection, name of inspector, points of system checked, and any anomalies discovered.

MINIMUM ANNUAL COMPREHENSIVE, AT HOME EXAMINATION AND TEST PROGRAM: In addition to routine checks on the road for touring systems, Meyer Sound also recommends a careful, comprehensive system examination and testing “at home” in the warehouse or other appropriate location at regular intervals. Such at home examinations and tests should occur at least once a year, and should include a careful inspection of each component under ideal lighting conditions, and then a final comprehensive check of the entire system after it has been flown.

If any anomalies or defects are discovered that could possibly affect the safety or integrity of the system, any affected parts or subsystems should be replaced in their entirety before that part of the system is flown again.

REPLACEMENT PARTS

Any component found to be defective, or any safety-related component you even suspect might be defective, should be replaced with the equivalent, approved part. Parts specific to a QuickFly system should be ordered directly from Meyer Sound. No attempt should be made to substitute what appears to be equivalent or “mostly the same” generic replacements. Some parts used in QuickFly systems are identical to those used in other rigging applications. To the best of our knowledge, most of these suppliers are reputable and their products are reliable. However, Meyer Sound has no way of assuring the quality of products made by these various suppliers. Therefore, Meyer Sound is not responsible for problems caused by components that were not supplied by Meyer Sound.

TRAINING

Considering their sophistication and flexibility, QuickFly systems are relatively straightforward and easy to use. Nevertheless, key points of assembly, rigging, and flying that must be fully mastered before a system is flown. Users should read this manual in its entirety before attempting to deploy any QuickFly system. You may make additional copies of this manual as necessary for in-house use; copies may not be made for any other purpose.

© 2003
Meyer Sound Laboratories Inc.

OVERVIEW

The MG-2D multipurpose grid allows M2D compact curvilinear array loudspeakers and M2D-Sub compact subwoofers to be flown or ground stacked. The MG-2D grid also provides a transition from the bottom of an M3D line array loudspeaker/M3D-Sub directional subwoofer array and MILO high-power curvilinear array to an M2D/M2D-Sub array (the MTK-2D transition kit is required for M3D arrays and the MTR-3DM transition kit is required for MILO arrays). Up to 12 M2Ds (or a combination of M2Ds/M2D-Subs of comparable weight) may be flown from single or multiple rigging points of appropriate rating, with a safety factor of 7:1.

List of Contents: MG-2D Multipurpose Grid Kit (Part 40.112.050.01)

	Item	Qty	Part Number	Description
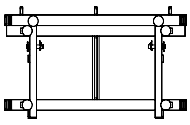	A	1	40.112.050.01	MG-2D Multipurpose Grid Assembly
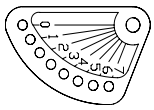	B	2	45.112.051.01	MG-2D CamLink
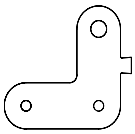	C	2	61.112.052.01	MG-2D Front Link
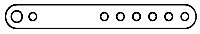	D	2	61.112.027.01	MG-2D Adjustable Link
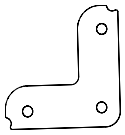	E	2	61.112.032.01	M2D Downtilt Link
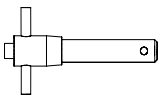	F	4	134.007	0.5" x 2/5" Quick Release Pins
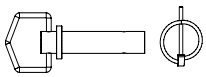	G	2	134.019	Hitch Pin, 0.88" x 4.25", Black Handle
	H	6	124.074	Leveling Foot

© 2003
Meyer Sound Laboratories Inc.

MG-2D Multipurpose Grid Dimensions

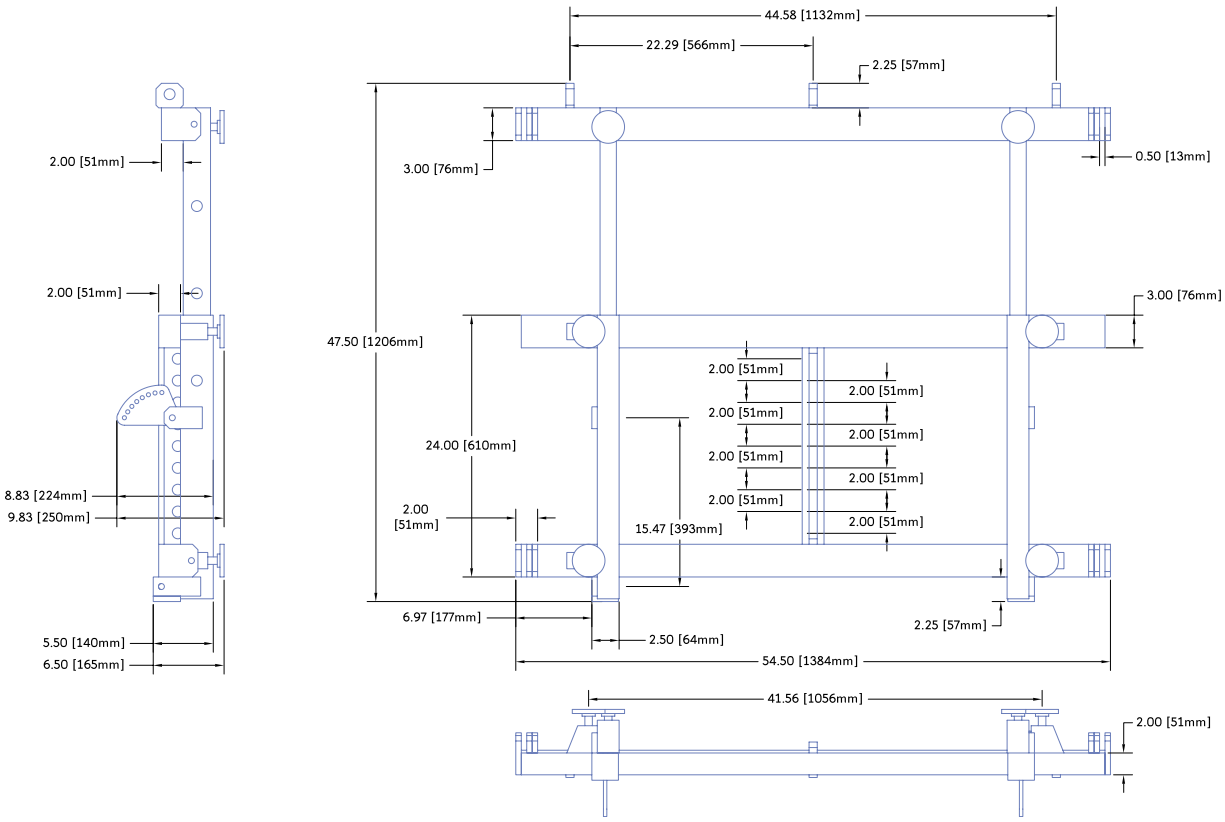

NOTE: To expand or retract the MG-2D grid extension frame, remove the two hitch pins. Once the extension frame is extended to its outer position, reinstall the hitch pins, securing the extension frame safely to the MG-2D grid.

TIP: If you are working in conditions where weight is a factor, you have the option to reduce your overall load by 64 pounds (29.03 kg) by removing the extension frame completely.

MG-2D Multipurpose Grid Weight: 220 lbs (99.79 kg)

© 2003
Meyer Sound Laboratories Inc.

LOAD RATINGS OVERVIEW

All of the load ratings in this assembly guide take the following into consideration:

- The weight of the MG-2D grid itself has been included.
- The maximum number of loudspeakers that may be hung is based on the M2D weight of 116 lbs (52.62 kg) and the M2D-Sub weight of 173 lbs (78.47 kg).
- The load ratings and maximum weights allowed regard the MG-2D grid and flown loudspeakers as a system, including links and pins. Thus, the maximum stress point could change from one element to another in the system.

CAUTION: Always use properly rated rigging hardware.

When flying an array of loudspeakers as discussed in this guide, the entire weight of the array can shift completely to either the front or back motor or set of motors; the degree of shift depends on the splay between individual cabinets in the array, the number of cabinets, and the angle of the MG-2D grid. Accordingly, this guide rates the rigging system for the "worst case" loadings that can occur at the final trim of an array while maintaining a 5:1 or 7:1 safety factor.

With the use of transition accessories, you can also integrate other M Series loudspeakers with M2D and M2D-Sub loudspeakers, to form combined arrays such as:

- M2D/M2D-Sub and MILO
- M3D/M3D-Sub and M2D/M2D-Sub

CAUTION: The weight of any additional items hung with the array, such as downfill loudspeakers and transition accessories and cable, must be considered when calculating maximum load.

© 2003
Meyer Sound Laboratories Inc.

2. MG-2D MULTIPURPOSE GRID IN FLOWN CONFIGURATION

0° TO -7° DOWNTILT BETWEEN MG-2D GRID AND FIRST M2D CABINET

This configuration shows the most common requirements for flying an M2D system. Using this combination of links provides 0° to -7° of downtilt for the first cabinet in the array. The grid may also be tilted up or down, up to a maximum of 35° using single or multiple rigging points.

Install the blue CamLink (B) as shown for 0° to -7° of downtilt between the grid and the first cabinet. Install the MG-2D front links (C) as shown, and secure with all three QRPs.

NOTE: The blue MG-2D CamLinks and front links have one 1/2" hole and the rest of the holes are 3/8". Please make sure the appropriate pins are used for each hole.

Maximum Load:

7:1 safety factor: Up to 12 M2Ds or the equivalent weight of M2Ds and/or M2D-Subs

5:1 safety factor: Up to 16 M2Ds or the equivalent weight of M2Ds and/or M2D-Subs

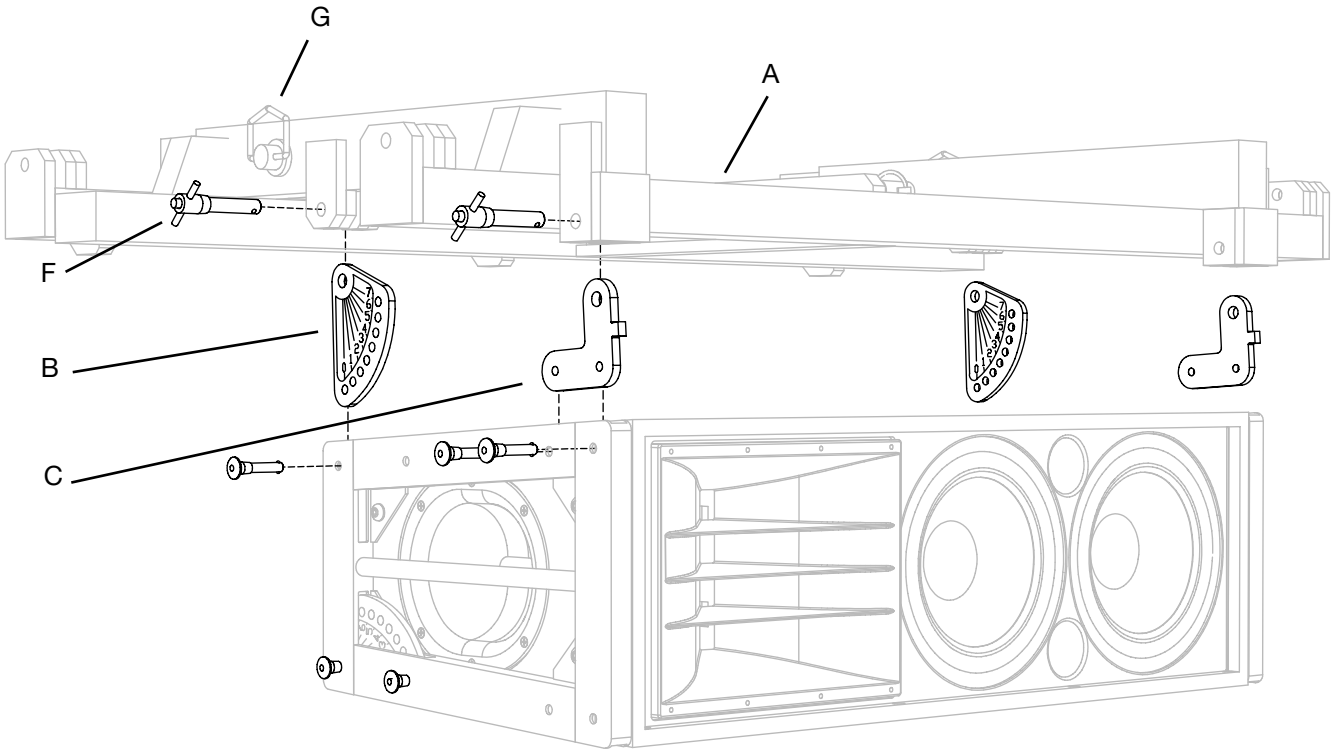

CAUTION: When flying an array from the MG-2D grid, it must always be supported by at least one pick-up hole from the MG-2D's central member. The extension frame may ONLY be used as a secondary pick-up location for tilting the array or spreading the rigging between two points.

© 2003
Meyer Sound Laboratories Inc.

0° TO 15° OF UPTILT BETWEEN THE MG-2D GRID AND THE FIRST M2D CABINET

This configuration may be used when flying an M2D system that will require uptilt of the first M2D or M2D-Sub while keeping the grid level. The grid may also be tilted up or down to a maximum of 35°, when two motors are used in an upstage/downstage configuration.

Install the blue adjustable link (D) as shown for 0° to 15° of uptilt (in 3° increments) between the grid and the first cabinet.

Maximum Load:

7:1 safety factor: Up to 12 M2Ds or the equivalent weight of M2Ds and/or M2D-Subs

5:1 safety factor: Up to 16 M2Ds or the equivalent weight of M2Ds and/or M2D-Subs

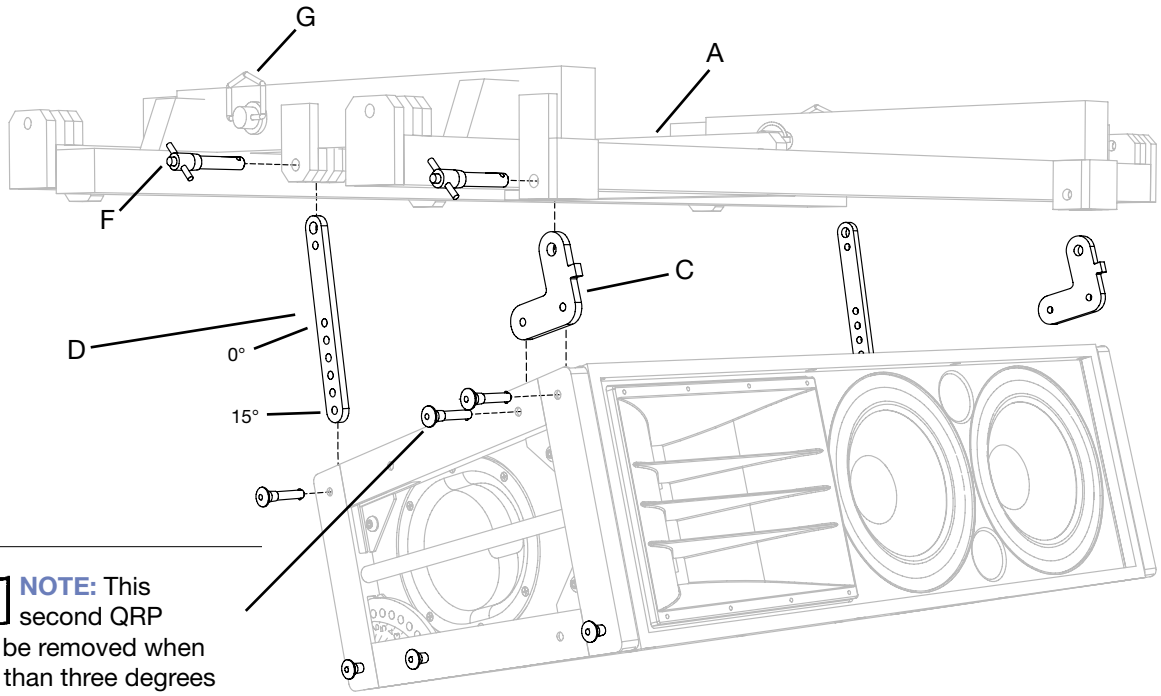

NOTE: This second QRP must be removed when more than three degrees of uptilt is required.

WARNING: The leveling feet must always be removed from the MG-2D grid before flying a system. Unscrew the entire assembly, including the threaded leg, and remove completely.

© 2003
Meyer Sound Laboratories Inc.

MG-2D GRID IN REVERSE FLOWN CONFIGURATION

This configuration is useful in applications where the MG-2D grid must be tilted upwards so extremely as to cause the array's center of gravity to fall forward of the array. Reversing the MG-2D grid positions the grid extension arm in front of the array, providing a forward pick-up point. Further uptilt can be achieved by using the MG-2D grid's extension arm in the retracted, middle or fully-extended position. The M2D loudspeaker MUST be suspended from the main body of the MG-2D grid. Only use the extension arm as a secondary pick-up location.

Install the blue front links (C) and the blue adjustable links (D) as shown. The second (most inward) M2D quick release pin (QRP) is omitted in the front link when connecting to the rear of M2D. CamLinks may not be used when the MG-2D grid is in this orientation for the first cabinet in the array.

Maximum Load:

7:1 Safety factor: Up to 12 M2Ds or the equivalent weight of M2Ds and/or M2D-Subs

5:1 Safety factor: Up to 16 M2Ds or the equivalent weight of M2Ds and/or M2D-Subs

NOTE: When flying an array from the MG-2D grid, it must always be supported by at least one pick-up hole from the MG-2D's central member. The extension frame may ONLY be used as a secondary pick-up location for tilting the array or spreading the rigging between two points

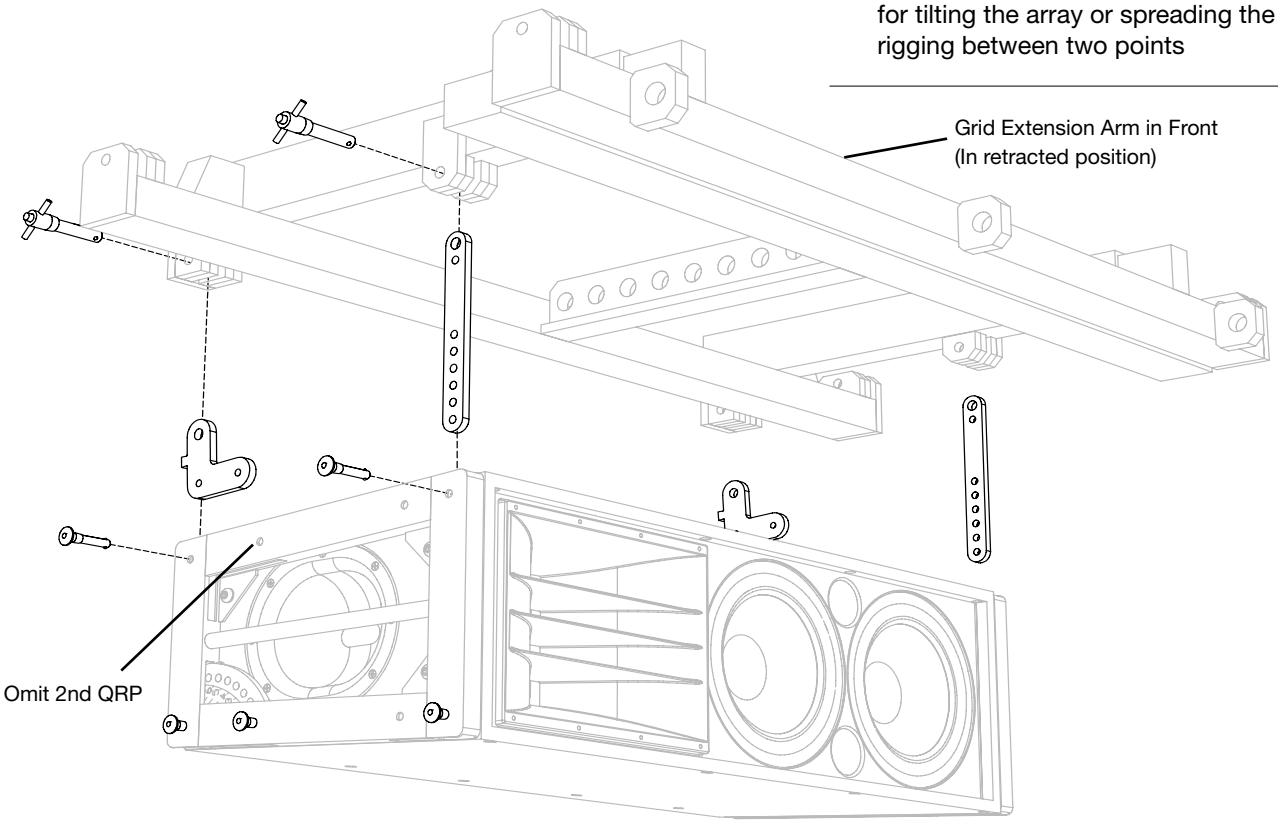

WARNING: The leveling feet must always be removed from the MG-2D grid before flying a system. Unscrew the entire assembly, including the threaded leg, and remove completely.

© 2003
Meyer Sound Laboratories Inc.

3. MG-2D MULTIPURPOSE GRID IN GROUND-SUPPORTED CONFIGURATION

0° TO 7° OF UPTILT BETWEEN MG-2D GRID AND FIRST M2D CABINET

This configuration is used for applications requiring 0° to 7° of uptilt for the first M2D cabinet. The drawing shows an example configuration of M2Ds being stacked onto an MG-2D grid with the frame extended to increase the footprint and stability of the grid.

Install the MG-2D grid's blue CamLinks (B) and blue front links (C) in the same orientation as shown below.

Once the first M2D loudspeaker is attached to the MG-2D grid, install the additional loudspeakers as follows: With the CamLinks tucked away, set the front links as shown on the uppermost M2D. Using the front link as a peg, sit the M2D on the front link's spacer. Set both quick release pins into the front link of the M2D, then set the CamLink to the desired splay angle.

WARNING: To increase stability, always use the rear arm in its extended position and add ballast if required.

WARNING: For safety reasons, do not ground stack more than 8 M2Ds.

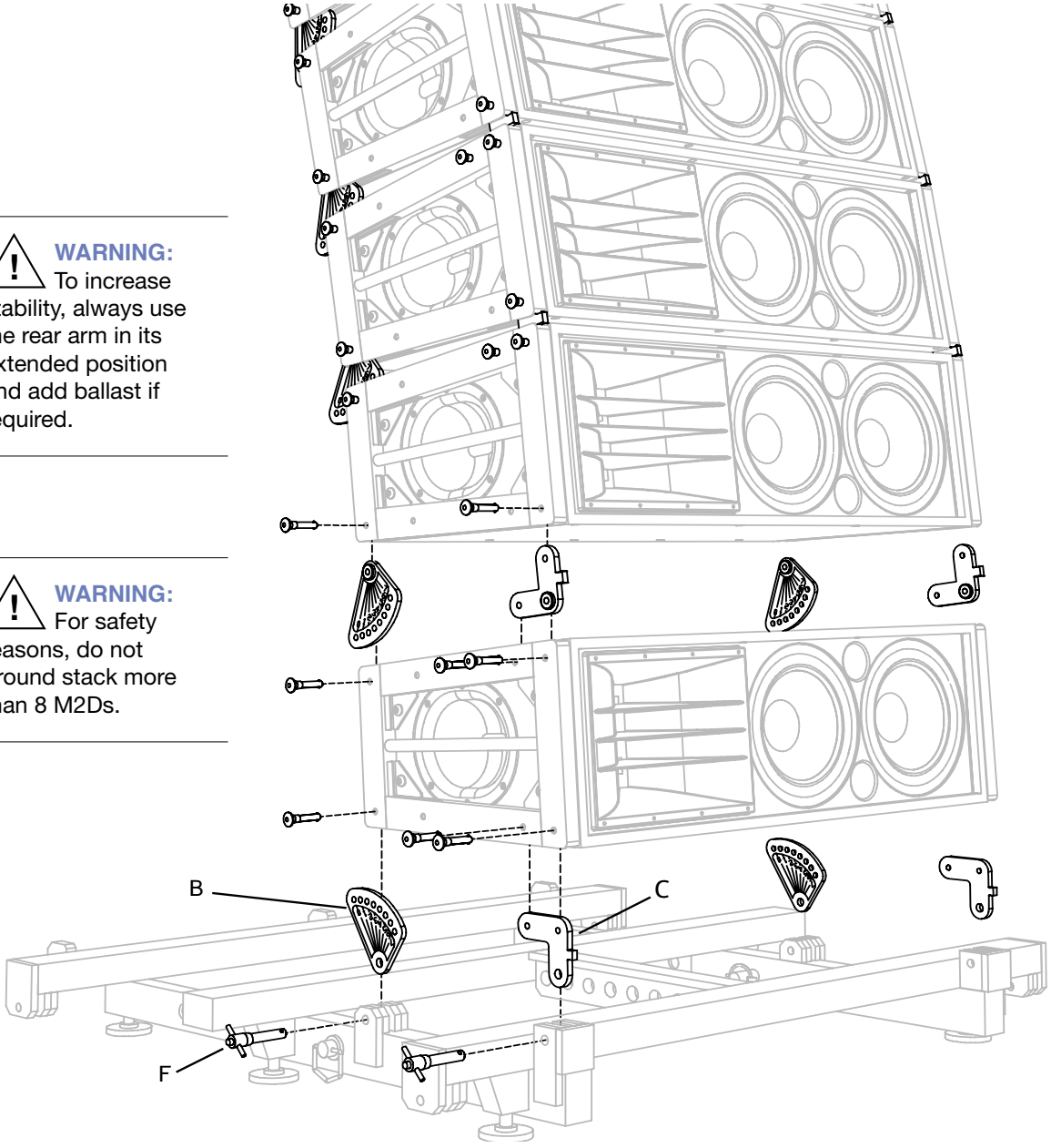

© 2003
Meyer Sound Laboratories Inc.

0° TO -15° OF DOWNTILT BETWEEN MG-2D GRID AND FIRST M2D CABINET

This configurations is used for applications requiring 0 to -15 degrees of downtilt for the first M2D cabinet. This drawing shows an example configuration of M2Ds being stacked onto an MG-2D with the frame extended.

Install blue adjustable links (D) and front links (C) in the same orientation as shown below.

Once the first M2D loudspeaker is attached to the MG-2D grid, install the additional loudspeakers as follows: With the CamLinks tucked away, set the Front Links as shown on the upper most M2D. Using the Front Link as a peg, sit the M2D on the Front Link's spacer. Set both quick release pins (QRPs) into the front link of the M2D, then set the CamLink to the desired splay angle.

NOTE: This second QRP must be removed when more than three degrees of downtilt is required.

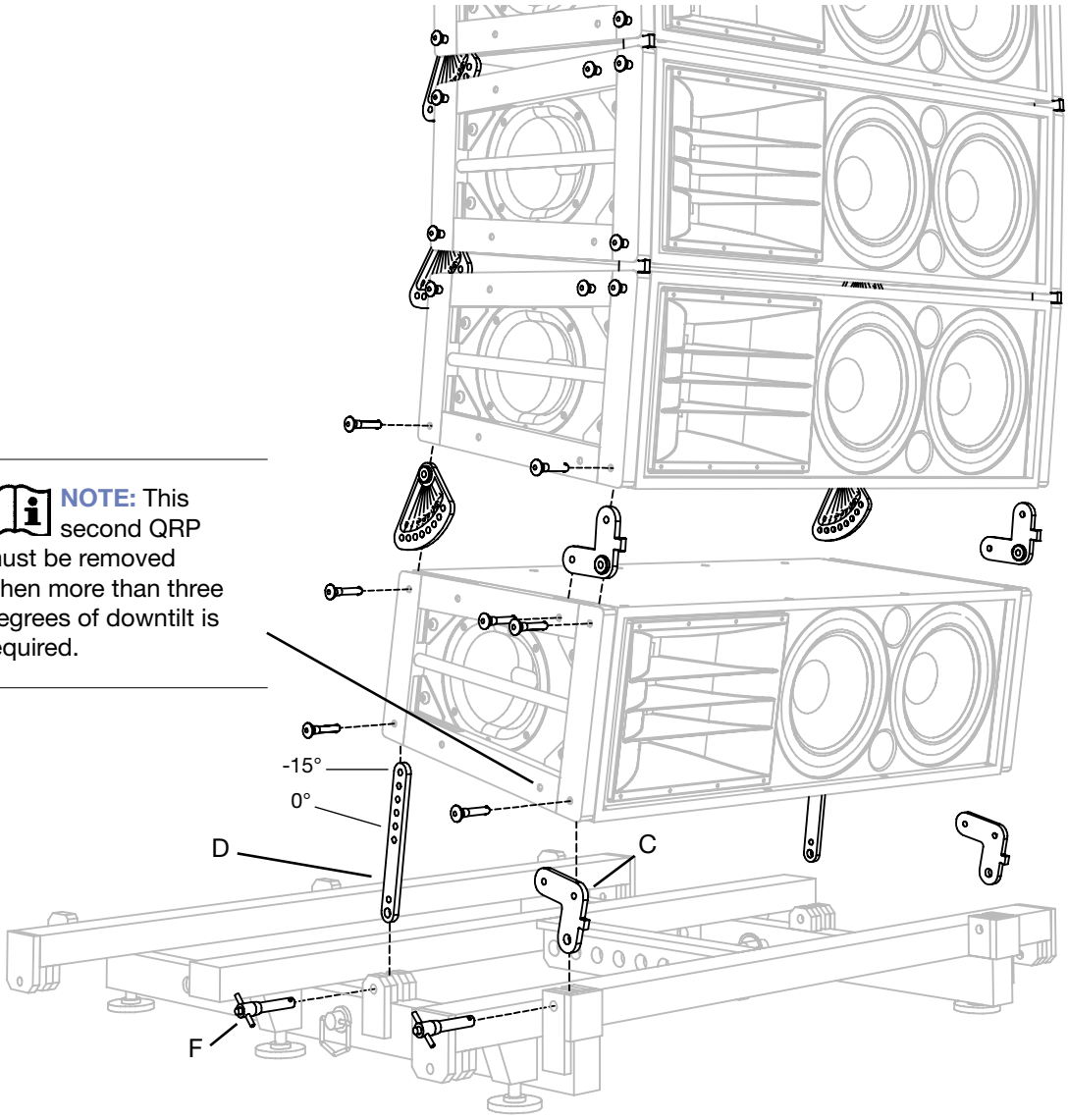

WARNING: To increase stability, ALWAYS use the rear arm in its extended position and add ballast if required.

© 2003
Meyer Sound Laboratories Inc.

M2D DOWNTILTED OVER AN M2D-SUB

This drawing shows an example configuration of M2D-Subs stacked onto the MG-2D grid with an uptilt of 0° to 7°, with a downtilted M2D being installed above.

Install the blue "L" shaped downtilt link (E) as shown, in place of the standard black M2D front links between the M2D-Sub and the M2D. Use the blue adjustable links (D) as shown in the rear of the cabinets, using the smaller 5/16" hole instead of the 1/2".

NOTE: If 0° to 7° of uptilt is needed between the M2D-Sub and first M2D, substitute a standard black M2D CamLink in place of the blue adjustable link (D) shown. The downtilt link (E) may also be replaced with a standard black M2D front link.

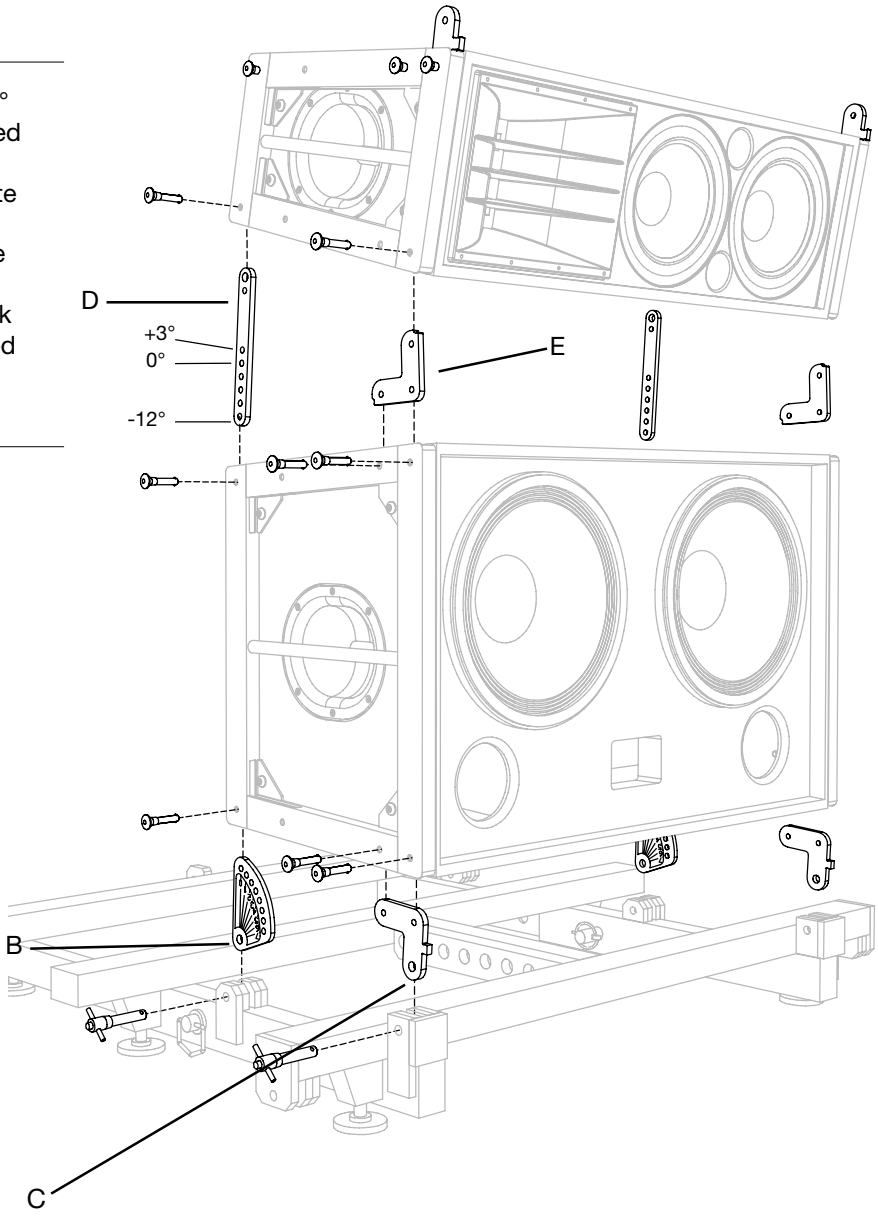

WARNING: To increase stability, always use the rear arm in its extended position and add ballast if required.

© 2003
Meyer Sound Laboratories Inc.

4. MG-2D MULTIPURPOSE GRID AS A TRANSITION FRAME

TRANSITION FROM M3D TO M2D/M2D-SUB (MTK-2D TRANSITION KIT REQUIRED)

This drawing shows how the MG-2D grid can be configured to provide a transition from M3Ds/M3D-Subs to M2Ds/M2D-Subs. The grid is oriented as shown below.

Install the MTK-2D transition links into the rear open tubes of the MRF-3D with the link's single holes downward. Use the M3D CamLinks as the front transition links between the M3D and the MG-2D. CamLink holes 5, 4 and 3 degrees may be used and correspond to the transition link's three hole choices. Setting the CamLink to hole position 3 and the MTK-2D transition link at hole 3 (see below) will result in the MG-2D grid being parallel to the M3D. This is also true with a combination of CamLink hole 5 and transition link hole 2.

40.112.058.01 - MTK-2D Transition Kit Contents			
Item	**Qty**	**Part Number**	**Description**
A	2	61.112.029.01	MTK-2D Transition Link
B	4	134.007	.5" x 2.5" Quick Release Pin (QRP)

NOTE: The approximate combined weight of the MTK-2D transition kit and the MG-2D grid is 227 lbs (102.97 kg). The M2D loudspeaker weighs 116 lbs (52.62 kg).

CAUTION: When using combined arrays, the total weight of the array should always be calculated and be within specifications before flying the array. Do not exceed the primary grid load ratings listed in the grid's guide.

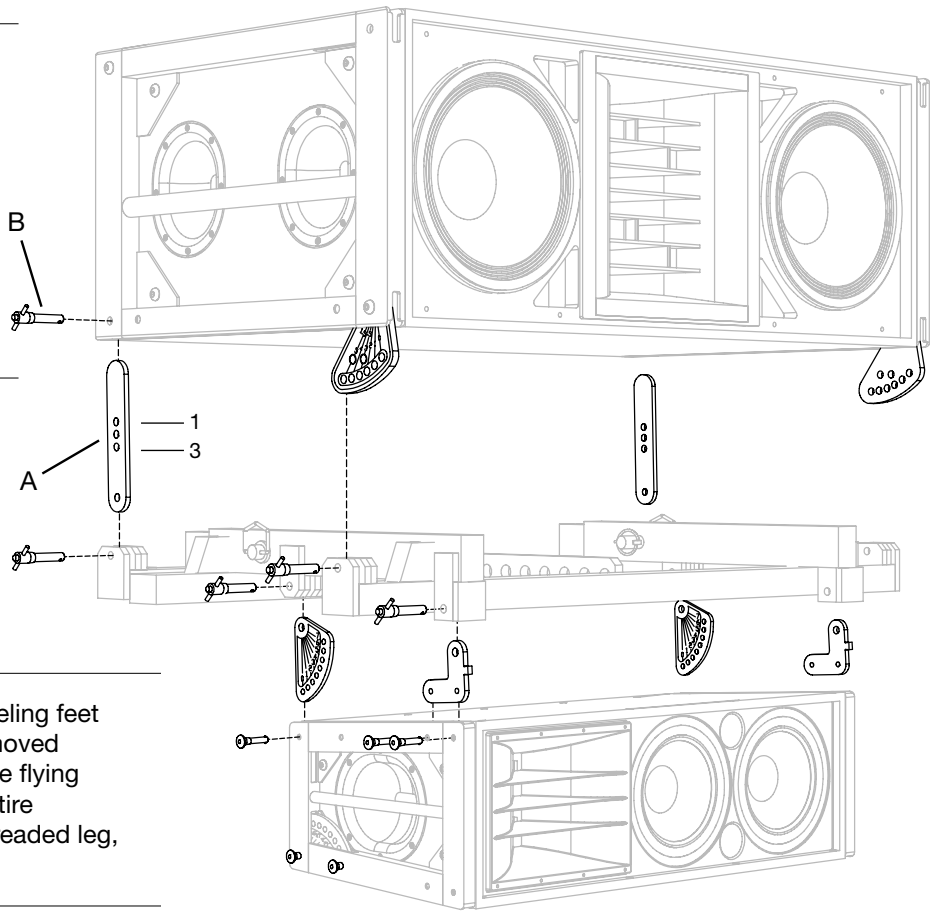

WARNING: The leveling feet must always be removed from the MG-2D grid before flying a system. Unscrew the entire assembly, including the threaded leg, and remove completely.

© 2003
Meyer Sound Laboratories Inc.

MTB-2D/M TRANSITION BAR KIT: MILO TO M2D

The combination of the MTB-2D/M transition bar kit and MG-2D multipurpose grid allows you to easily transition from MILO to M2D loudspeakers. MTB-2D/M transition bars provide the link needed to attach an MG-2D grid below a MILO loudspeaker; a downfill array of M2Ds can then be flown from the MG-2D as required using the full capabilities and flexibility of the MG-2D grid. The MTB-2D/M kit contains the bars and quick release pins (QRPs) necessary for the transition between MILO and the MG-2D grid.

List of Contents: MTB-2D/M Transition Kit (Part 40.132.033.01)			
	Qty	**Part Number**	**Description**
A	2		MTB-2D/M Transition Bar
B	4	134.007	1/2" x 2.5" QRP

NOTE: The approximate combined weight of the MTB-2D/M and the MG-2D grid is 242 lbs (109.77 kg) The M2D loudspeaker weighs 116 lbs (52.62 kg).

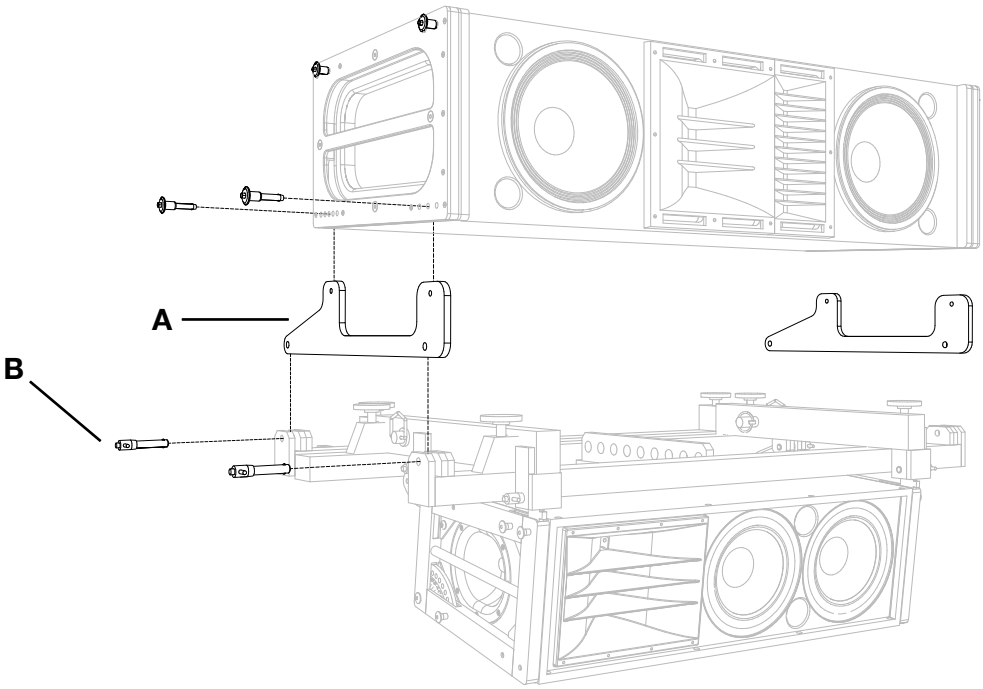

CAUTION: When using combined arrays, the total weight of the array should always be calculated and be within specifications before flying the array. Do not exceed the primary grid load ratings listed in the grid's guide.

© 2003
Meyer Sound Laboratories Inc.

Meyer Sound Laboratories Inc.
2832 San Pablo Avenue
Berkeley, CA 94702

www.meyersound.com
T: +1 510 486.1166
F: +1 510 486.8356

© 2003
Meyer Sound Laboratories Inc.

PN: 05.112.401.01
Rev: C