M3D™ and M3D-Sub QuickFly

QUICKFLY



DECLARATION OF CONFORMITY ACCORDING TO ISO/IEC GUIDE AND EN 45014

The manufacturer:
Meyer Sound Laboratories, Inc.
2832 San Pablo Avenue
Berkeley, California 94702-2204, USA

Declares that the products: M3D™ and M3D-Sub conforms to the following Product Specifications:

Safety:	EN60065: 1998
	IEC60065: 1998
EMC:	EN55103-1: 1997 emission(1)
	EN55103-2: 1997 immunity(2)

This device complies with the requirements of the Low Voltage Directive 73 / 23 / EEC and the EMC Directive 89 /336 / EEC.

This device also complies with EN 55103-1 & -2.
Operation is subject to the following two conditions:
(1) this device may not cause harmful interference, and
(2) this device must accept any interference received, including interference that may cause undesired operation.

Environmental specifications for Meyer Sound electronics products:

Operating Temperature:	0˚C to + 45˚C
Nonoperating Temperature:	<-40˚C or > +75˚C
Humidity:	to 95% at 35˚C
Operating Altitude:	to 4600 m (15,000 ft)
Nonoperating Altitude:	to 6300 m (25,000 ft)
Shock:	30g 11 msec half-sine on each of 6 sides
Vibration:	10Hz to 55Hz (0.010m peak-to-peak excursion)

3K59 COMMERCIAL AUDIO SYSTEM
c UL us LISTED

Made by Meyer Sound Laboratories
Berkeley, California USA
European Office:
Meyer Sound Lab. GmbH
Carl Zeiss Strasse 13
56751 Polch, Germany
CE

Office of Quality Manager
Berkeley, California USA
July 19, 2002

COPYRIGHT

© 2003 Meyer Sound. All rights reserved.

M3D and M3D-Sub QuickFly Rigging Manual

The contents of this manual are furnished for informational purposes only, are subject to change without notice, and should not be construed as a commitment by Meyer Sound Laboratories, Inc. Meyer Sound assumes no responsibility or liability for any errors or inaccuracies that may appear in this manual.

Except as permitted by applicable copyright law, no part of this publication may be reproduced, stored in a retrieval system, or transmitted, in any form or by any means, electronic, mechanical, recording or otherwise, without prior written permission from Meyer Sound.

M3D, TruPower, RMS, BroadbandQ, MAPP Online and REM are trademarks of Meyer Sound. Meyer Sound SIM and QuickFly are registered trademarks of Meyer Sound (Reg. U.S. Pat. & Tm. Off.). All third-party trademarks mentioned herein are the property of their respective trademark holders.

Printed in the U.S.A.

Part Number: 05.105.400.01, Rev. A

SYMBOLS USED

These symbols indicate important safety or operating features in this booklet and on the chassis.

		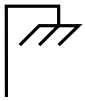	
Dangerous voltages: risk of electric shock	Important operating instructions	Frame or chassis	Protective earth ground
Pour indiquer les risques résultant de tensions dangereuses	Pour indequer important instructions	Masse, châssis	Terre de protection
Zu die gefahren von gefährliche spanning zeigen	Zu wichtige betriebs-anweisung und unter-haltsanweisung zeigen	Rahmen oder chassis	Die schutzerde
Para indicar voltajes peligrosos.	Instrucciones importantes de funcionamiento y/o manteniento	Armadura o chassis	Tierra proteccionista

IMPORTANT SAFETY INSTRUCTIONS

1. Read these instructions.
2. Keep these instructions.
3. Heed all warnings.
4. Follow all instructions.
5. Do not use this loudspeaker near water.
6. Clean only with dry cloth.
7. Do not block any ventilation openings. Install in accordance with Meyer Sound's installation instructions.
8. Do not install near any heat sources such as radiators, heat registers, stoves, or other apparatus that produce heat.
9. Do not defeat the safety purpose of the grounding-type plug. A grounding-type plug has two blades and a third grounding prong. The third prong is provided for your safety. If the provided plug does not fit into your outlet, consult an electrician for replacement of the obsolete outlet.
10. Protect the power cord from being walked on or pinched particularly at plugs, convenience receptacles, and the point where they exit from the loudspeaker. The AC mains plug or appliance coupler shall remain readily accessable for operation.
11. Only use attachments/accessories specified by Meyer Sound.
12. Use only with the caster rails or rigging specified by Meyer Sound, or sold with the loudspeaker. Handles are for carrying only.



CAUTION: Rigging should only be done by experienced professionals.

13. Unplug this loudspeaker during lightning storms or when unused for long periods of time.
14. Refer all servicing to qualified service personnel. Servicing is required when the loudspeaker has been damaged in any way, such as power-supply cord or plug is damaged, liquid has been spilled or objects have fallen into the loudspeaker, the loudspeaker has been exposed to rain or moisture, does not operate normally, or has been dropped.
15. This loudspeaker provides protection against direct sprays of water up to 15° from vertical. Rating IP42 in accordance with IEC 60529.

SAFETY STATEMENT

PLEASE READ THIS SECTION CAREFULLY AND IN ITS ENTIRETY. IT CONTAINS CRITICAL INFORMATION REGARDING SAFETY ISSUES, INCLUDING GUIDELINES FOR GENERAL SAFE USE OF RIGGING SYSTEMS AS WELL AS ADVISORIES ON GOVERNMENT REGULATIONS AND LIABILITY LAWS. MEYER SOUND CANNOT BE HELD RESPONSIBLE FOR CONSEQUENCES THAT MAY ENSUE DUE TO FAILURE TO READ AND COMPLY WITH INFORMATION IN THIS SECTION.

SCOPE OF THIS MANUAL

Although this manual contains much useful information on rigging in general, it does not claim to be a comprehensive resource on the subject. This manual assumes that the owners and/or users of a QuickFly system are knowledgeable and experienced in the areas of rigging and flying loudspeaker systems. MANY ISSUES OF CRUCIAL CONCERN, SUCH AS THE DETERMINATION OF APPROPRIATENESS AND CONDITION OF VENUE RIGGING POINTS, CANNOT BE ADDRESSED HERE. THEREFORE, THE USER MUST ASSUME ALL RESPONSIBILITY FOR THE APPROPRIATE USE OF QUICKFLY SYSTEMS IN ANY PARTICULAR LOCATION OR CIRCUMSTANCE.

THE SUSPENSION OF LARGE, HEAVY OBJECTS IN PUBLIC PLACES IS SUBJECT TO NUMEROUS LAWS AND REGULATIONS AT THE NATIONAL/FEDERAL, STATE/PROVINCIAL, AND LOCAL LEVELS. THIS MANUAL DOES NOT ADDRESS THE SPECIFICS OF ANY SUCH APPLICABLE LAWS AND GOVERNMENT REGULATIONS. THIS MANUAL DETAILS PROCEDURES AND PRACTICES CONSISTENT WITH THOSE GENERALLY ACKNOWLEDGED AS ALLOWABLE AND SAFE IN THE UNITED STATES. HOWEVER, THE USER MUST ASSUME RESPONSIBILITY FOR MAKING SURE THAT USE OF ANY QUICKFLY SYSTEM AND ITS COMPONENTS IN ANY PARTICULAR CIRCUMSTANCE OR VENUE CONFORMS TO ALL APPLICABLE LAWS AND REGULATIONS IN FORCE AT THE TIME.

LOAD RATINGS AND SPECIFICATIONS

Long-term safe operation is a central concern in the design and manufacture of any rigging/flying system. Meyer Sound has taken great care in material selection and component design. In all critical cases, load points are redundant, with a safety margin that allows one or more load points to fail while maintaining system integrity. After manufacture, all load-critical system components are individually inspected.

All load ratings and other specifications given in this manual are the result of accepted engineering practice and careful testing. However, such specifications and ratings are subject to change. USERS ARE ADVISED TO CHECK THE QUICKFLY SECTION OF THE MEYER SOUND WEB SITE AT

http://www.meyersound.com

OR CONTACT TECHNICAL SUPPORT AT REGULAR INTERVALS TO CHECK FOR UPDATED OR REVISED INFORMATION.

REGULATORY COMPLIANCE

The engineering practices and safe working load (SWL) ratings of the QuickFly system are in full compliance with all known regulatory statutes currently applicable in the United States. Unless otherwise specified, all working loads are based on a 7:1 safety factor. However, as noted above, there are wide variations internationally in the regulations and practices applying to suspension of sound systems in public places. Although regulations in the United States are generally among the most stringent, safety codes may be even stricter in a few localities (such as those highly prone to earthquakes). In addition, applicable safety codes are open to interpretation: Government officials in one location may have a stricter interpretation than another local official, even when operating under the same regulations and in the same legal jurisdiction.

CONSEQUENTLY, USERS OF QUICKFLY RIGGING SYSTEMS SHOULD BE PREPARED TO TAKE ADDITIONAL SAFETY ASSURANCE MEASURES BEYOND THOSE OUTLINED IN THIS MANUAL. IN ALL CASES, IT IS THE RESPONSIBILITY OF THE USER TO MAKE CERTAIN THAT ANY MEYER SOUND LOUDSPEAKER SYSTEM IS SUSPENDED IN ACCORDANCE WITH ALL APPLICABLE NATIONAL/FEDERAL, STATE/PROVINCIAL, AND LOCAL REGULATIONS.

Advisory Note: Safety Responsibilities “Above the Hook”

In most touring applications of rigging systems, the touring sound provider is normally responsible for ensuring the safety of the suspension system only below the attachment point. The safety and suitability of the attachment point is generally seen as the responsibility of the venue owner or operator. However, this distinction (“above the hook” versus “below the hook”) can be open to interpretation. Touring system operators are advised

to double-check to make certain that attachment points are approved and suitably load rated, and that the points used are those identified as such by the venue owner or operator. AS AN EXTRA PRECAUTION, CAREFUL INSPECTION OF THE ATTACHMENT POINTS IS ADVISED BEFORE FLYING, PARTICULARLY IN OLDER VENUES OR THOSE HOSTING FREQUENT EVENTS USING LARGE SOUND AND LIGHTING SYSTEMS. In any case, Meyer Sound QuickFly systems are intended only for suspension from approved rigging points, each known to have ample SWL margins for the system components suspended below them.

INSPECTION AND MAINTENANCE

The Meyer Sound QuickFly systems are an assembly of mechanical devices, and are therefore subject to wear and tear over prolonged use, as well as damage from corrosive agents, extreme impact, or inappropriate use.

BECAUSE OF THE SAFETY ISSUES INVOLVED, USERS MUST ADOPT AND ADHERE TO A SCHEDULE OF REGULAR INSPECTION AND MAINTENANCE. IN TOURING APPLICATIONS, KEY COMPONENTS MUST BE INSPECTED BEFORE EACH USE. Such inspection includes examination of all load-bearing components for any sign of undue wear, twisting, buckling, cracking, rusting, or other corrosion. In regard to rust and corrosion, the main components of a QuickFly system are either protected by an exterior coating or made from stainless steel, which is impervious to rust and resistant to most corrosive fluids. Nevertheless, normal use and shipping vibrations can wear through the protective coatings, and extremely corrosive fluids (such as battery acid) can cause severe damage with prolonged exposure even to protected parts. Particular attention should be given to screws, bolts, and other fasteners to make certain the fittings are tight and secure. Metal seams and welds should be examined for any sign of separation or deformation. Meyer Sound strongly recommends that written documentation be maintained on each QuickFly system, noting date of inspection, name of inspector, points of system checked, and any anomalies discovered.

In addition to routine checks on the road for touring systems, Meyer Sound also recommends a careful, comprehensive system examination and testing “at home” in the warehouse or other appropriate location at regular intervals. At this time, each component should be carefully inspected under ideal lighting conditions, and then the entire system should be flown as used for a final comprehensive check.

If any anomalies or defects are discovered that could possibly affect the safety or integrity of the system, any affected parts or subsystems should be replaced in their entirety before that part of the system is flown again.

REPLACEMENT PARTS

Any component found to be defective, or any safety-related component you even suspect might be defective, should be replaced with the equivalent, approved part. Parts specific to a QuickFly system should be ordered directly from Meyer Sound. No attempt should be made to substitute what appears to be equivalent or “mostly the same” generic replacements. Some parts used in QuickFly systems are identical to those used in other rigging applications. To the best of our knowledge, most of these suppliers are reputable and their products are reliable. However, Meyer Sound has no way of assuring the quality of products made by these various suppliers. Therefore, Meyer Sound is not responsible for problems caused by components that were not supplied by Meyer Sound.

TRAINING

Considering their sophistication and flexibility, QuickFly systems are relatively straightforward and easy to use. Nevertheless, key points of assembly, rigging, and flying that must be fully mastered before a system is flown. Users should read this manual in its entirety before attempting to deploy any QuickFly system. You may make additional copies of this manual as necessary for in-house use; copies may not be made for any other purpose.

CONTENTS

Introduction **1**
- Assembling Blocks for Transport 1
  - Truck Pack 1
  - M3D Transport 3

Before Hanging an M3D Array **4**
- Choosing Rigging Point Capacities 4
- M3D Placement Calculator 4
- Measuring a Venue 5

General Hanging Considerations **8**
- Do's and Don'ts 8
- Lifting Mechanisms 8
- Use Front and Back Motors Whenever Possible 9
- Choosing Pickup Points 9

Array Assembly and Angle Adjustment **12**
- Starting Array Assembly 12

Stacking an M3D Array **13**
- Attaching Motors to the MTG-3D Top Grid 13
- Attaching M3Ds to the MTG-3D Top Grid 13

Adjusting Angles **15**
- MTG-3D Top Grid to First M3D Angle Adjustment 15
  - Adjusting Top M3D Top Grid Downtilt 15
  - Adjusting MTG-3D Top Grid Uptilt 16
- Adjusting Splay Angle in an Array 17
- Removing Caster Rails 18
- Adding a Block of M3Ds to an Array 19

Flying a Completed Array **22**
- Including M3D-Subs in an Array 23

Striking the Array **24**

Appendix A — Configurations and Load Ratings **25**
- General 25
- About These Load Ratings 25
- Measured Angles 25
  - Angle Between Bridle and Grid 25
  - Maximum Top Grid Angle 25
  - Bridle Leg Lengths 25
- Configuration A 26
- Configuration B 28
- Configuration C 30
- Configuration D 32
- Configuration E 34
- Configuration F 35
- Configuration G 36

Appendix B — Physical Specifications **37**
M3D Physical Specifications 37
M3D-Sub Physical Specifications 38
MTG-3D Top Grid Physical Specifications 38

Appendix C — MTF-3D Transition Frame Assembly Procedure **40**
Transition Frame Kit 40
Attaching Loudspeakers to Transition Frame 40
Attaching the Adjustable Link Assembly to the M3D MRF-3D Rigging Frames 41
Rear 41
Front 42

Glossary **43**

M3D and M3D-Sub QuickFly

INTRODUCTION

The M3D and M3D-Sub QuickFly rigging system is a complete integrated solution for transporting and flying M3D and M3D-Sub loudspeakers. This system includes everything below the motors, to the caster rails and covers that carry and protect the system in transport. All the hardware for rigging the system remains captive to the loudspeakers and MTG-3D Top Grid. This manual is a guide to transporting, assembling, adjusting, and striking a vertical array of M3D and M3D-Subs. Also included is information on the Meyer Sound M3D Placement Calculator, a tool that provides necessary mechanical setup information for prerigging and hanging an M3D and M3D-Sub system. For information on the operation of the M3D and M3D-Sub, please refer to the M3D Operating Instructions, part number 05.105.022.01

Throughout this document, we refer to the M3D loudspeaker. To save space and avoid unnecessary repetition, please note that in all cases — unless otherwise indicated — "M3D" includes M3D and M3D-Sub. For example, when we state "The first step in preparing M3Ds for transportation…" What is implied is, "The first step in preparing M3Ds and M3D-Subs for transportation…"

ASSEMBLING BLOCKS FOR TRANSPORT

The first step in preparing M3Ds for transportation is to assemble the loudspeakers in modular blocks for easy assembly. The number of M3Ds in a block will be determined by the safest and most practical size for your truck pack and load-in considerations.

The procedure in the section "Array Assembly and Angle Adjustment," may be considered for assembling the blocks suitable for transport.

CAUTION: Take care if you use a forklift for making or moving M3D blocks. There is no protective metal frame at the bottom of an M3D while it is on its caster rails, and the forklift may damage the wooden cabinet. Using protective padding or material over the forks is recommended.

Truck Pack

M3Ds can be transported in blocks from one to four M3Ds high, whichever configuration maximizes loading in the truck and meets your needs (see Figure 1). These M3D blocks can be packed three wide in a trailer. Blocks of one or two M3Ds are lighter to move when on site, but may not make as efficient use of truck cargo space.



Figure 1. M3Ds packed in truck for transport

CAUTION: Because of weight and stability considerations, we recommend that transport blocks not exceed four M3Ds high.

Using a three- or four-high M3D block will make each block heavier (see Table 1) and less stable, so the blocks will require extra care when rolling over an uneven surface and up truck ramps. Conversely, larger blocks will make more efficient use of a truck's cargo space and make a more efficient load-in and strike.

The optional M3D transit covers, shown in Figure 2, are constructed of wear-resistant nylon fabric with Velcro closures to protect the M3D and loudspeakers from scuffs and weather during transport.



Figure 2. M3D transit covers shown covering one-, two-, and four-high M3D blocks

Table 1: M3D Transport Blocks

Number of M3Ds	M3D Block Weight	Block Height Mounted on Caster Rail	Transit Cover Part Number
1	415 lbs 188.24 kg	28.56 inches 7254 mm	66.105.036.01
2	830 lbs 376.48 kg	49.31 inches 12525 mm	66.105.037.01
3	1245 lbs 564.72 kg	70.06 inches 17795 mm	66.105.040.01
4	1660 lbs 752.96 kg	90.81 inches 23066 mm	66.105.038.01

Table 1 notes:

1. The table above refers to M3Ds only. If transport blocks include M3Ds and M3D-Subs or M3D-Subs only, recalculate the block weights by replacing the figure of 415 lbs (188.24 kg) with 395 lbs (179.17 kg).
2. An attached MTG-3D Top Grid will add approximately 11.0 inches (27.94 cm) to the height of the block and approximately 308 lbs (139.71 kg) to the total weight of the block.
3. The measurements are at 0˚ splay angles.
4. These measurements include the cover thickness.
5. The block height measurements include 7.81 inches (19.84 cm) added to the block height by the caster rails.

Table 2. M3D Rigging and Replacements

Item	Description	Part Number
MTG-3D	Top grid for M3D arrays	45.105.028.01
MTF-3D	Transition frame from M3D arrays to Self-Powered Series downfills	40.105.092.01
MRF-3D	M3D & M3D-Sub Left Side Rigging Frame Replacement Kit	40.105.103.01
MRF-3D	M3D & M3D-Sub Right Side Rigging Frame Replacement Kit	40.105.103.02
	M3D & M3D-Sub Front Cam-Link Replacement	40.105.104.01
	M3D & M3D-Sub Rear Link Replacement	40.105.104.02
	M3D Rigging Spacer Tool	68.105.072.01
	Caster Rail Kit	40.105.033.01
QRP	M3D Quick Release Pin	134.007

TIP: Meyer Sound's optional transit covers will protect M3Ds stacked for transport. They are easy to use, because one side opens with a pair of Velcro seams, allowing two stagehands to easily put on the cover without having to lift it over the top of the block.

We suggest you strap each block, once loaded, with a cargo strap to prevent rubbing through the covers and damaging the M3D cabinets or adjacent equipment.

M3D Transport

As a reference, a three-high M3D block weighs approximately 1245 pounds (564.72 kg), each or about the weight of a large-format mixing console, including its case, a piano, or a set-cart.

TIP: Attaching the MTG-3D Top Grid to the uppermost block of the array while transporting an M3D system can minimize labor and setup time. Use a wraparound, open-top cover to protect the four sides of the cabinets.

If you transport the block with the MTG-3D Top Grid attached, it should be in the middle of the outer two blocks to allow the MTG-3D Top Grid to slide over the other two blocks. This will also keep the MTG-3D Top Grid away from the wall of the truck. If the block with the MTG-3D Top Grid is placed against the truck wall, it must be loaded with the extension side of the MTG-3D Top Grid facing the inside (as opposed to the wall) of the truck. If it is oriented toward the wall, the extra space taken will prevent the third block from fitting beside the other two.

Alternatively, the cabinets may be transported in a two-high module. A stacking row of other equipment may be lifted on top while in the truck. The approximately 830 pound (376.48 kg) weight for the two-high module will be easier to manage in some types of venues.

NOTE: Because fewer M3Ds travel in each block, more stage space, rigging, and assembly time will be necessary.



Figure 3. Block of four M3Ds on caster rails with transit cover removed

BEFORE HANGING AN M3D ARRAY

Consider the following before you start hanging an M3D array.

CAUTION: We strongly recommend that you use a professional rigger when hanging any system.

CHOOSING RIGGING POINT CAPACITIES

The MTG-3D Top Grid is designed to allow the suspension of all approved vertical M3D array configurations. For a list of approved array configurations and their specifications, refer to “Appendix A — Configurations and Load Ratings.”

The total allowable tilt of the MTG-3D Top Grid with an array hung under it is ±25°. The MTG-3D Top Grid allows 10° of vertical angle adjustment between the MTG-3D Top Grid and the first cabinet, from 0° to ±5° in one degree increments. Refer to the section “MTG-3D Top Grid to First M3D Angle Adjustment,” for details.

When choosing your rigging point capacities, always keep in mind that the entire weight of the array may shift completely to either the front or back points. Three factors contribute to variations in the center of gravity:

1. The curvature of the array
2. The tilt of the entire array inclusive of the MTG-3D Top Grid
3. The number and types of M3D elements and downfills used

M3D PLACEMENT CALCULATOR

The M3D Placement Calculator, shown in Figure 4, is a mechanical design tool for calculating structural information about an M3D and/or M3D-Sub array. It is implemented as an Excel spreadsheet and provides information regarding rigging loads and array placement and aiming. A customizable graphic representation of the venue, as shown in Figure 4, can display up to three balconies. The Meyer Sound M3D Placement Calculator is approved by a certified structural engineering firm.

NOTE: You need a computer loaded with Microsoft Excel in order to run the M3D Placement Calculator.

The calculator is available online by filling out an application form on the Meyer Sound web site at:

http://www.meyersound.com/forms/m3dcalcform.htm

The download location and password will be emailed to you at the email address you enter on your application.

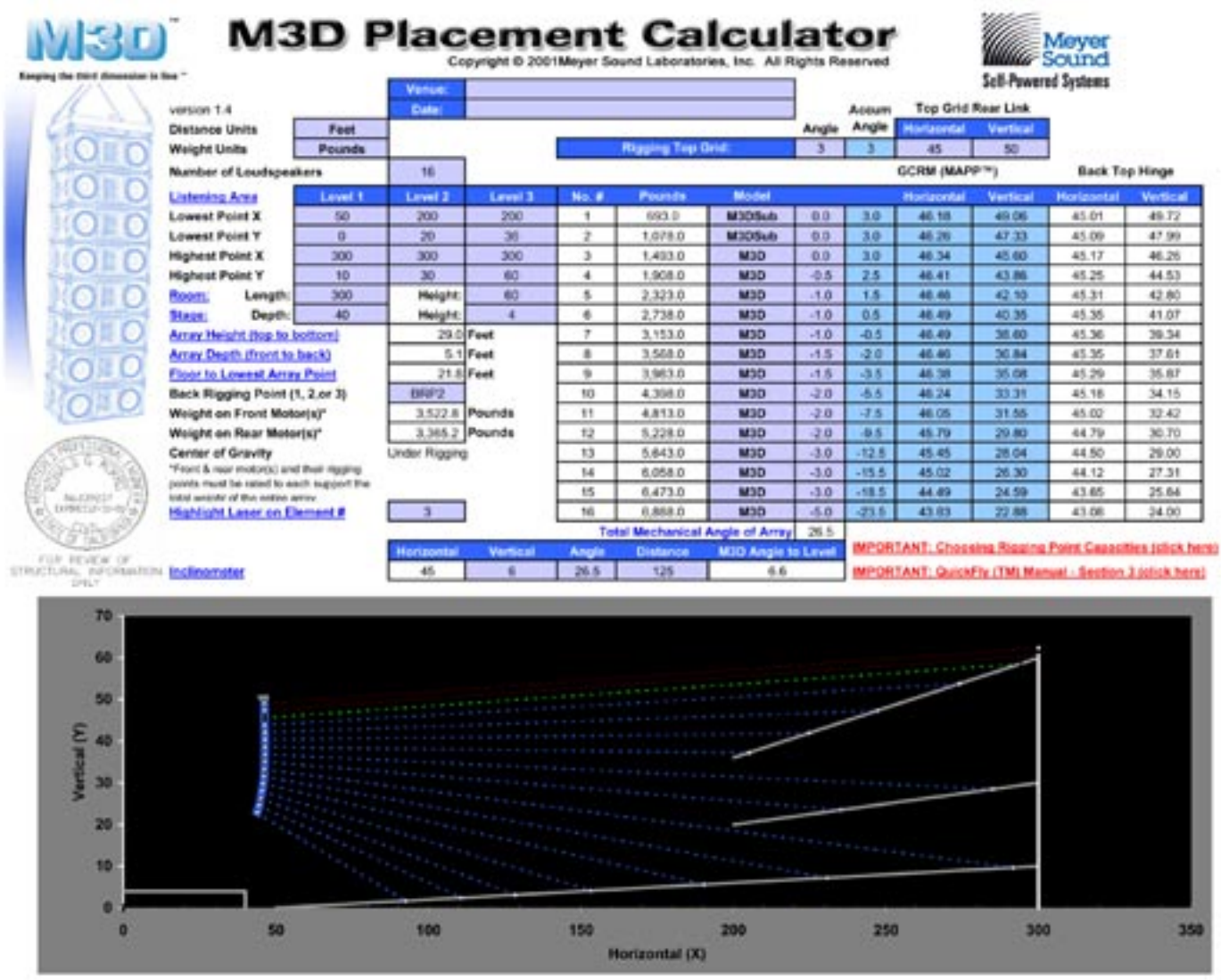

Figure 4. M3D Placement Calculator and link to detailed user instructions

MEASURING A VENUE

You are required to enter the venue's dimensions into the M3D Placement Calculator.

If scaled sectional drawings of the venue are available, you can use the dimensions from these drawings to determine the M3D array setup.

If scaled sectional drawings of the venue are not available, you can measure the venue by using a laser range finder, or alternatively, a long measuring tape.

Another less accurate option is to measure the venue by pacing it off, using a pedometer similar to item 3 in Figure 5, and using this measurement to make an educated estimate.

Figure 5 shows some tools that can aid in the process of aligning an array and focusing it to the requirements of a specific venue:

1. Binoculars
2. Laser measuring tool
3. Pedometer
4. Laser inclinometer
5. Self-leveling, four-way laser



Figure 5. Useful array alignment tools

Once you enter measurements into the M3D Placement Calculator, it will help you visualize the approximate vertical splay angles needed. The calculator will also help with other rigging considerations. Save the results of these calculations for use when you assemble the M3D array as described in the section “Array Assembly and Angle Adjustment.”

A laser measuring tool, similar to item 2 in Figure 5, may also be used to measure the height of venue rigging beams and the trim height of the array.

TIP: When making measurements and adjustments to an array, it is much more convenient to use a laser measuring tool than a measuring tape.

The M3D Placement Calculator is not an acoustical design tool and cannot be used to predict array coverage. To facilitate accurate coverage predictions, however, the calculator provides detailed positional data that can be entered into Meyer Sound’s MAPP Online™ (Multipurpose Acoustical Prediction Program). In combination, these two Meyer Sound tools give you the ability to predict sound coverage and to calculate the physical placement of arrays to accomplish the prediction.

The weight distribution fields shown in the M3D Placement Calculator are calculated for the array in its final trim position. During array assembly, it may be necessary for the front or rear motors to temporarily support the entire weight of the array. Therefore, when planning the rigging point loads, you must always plan on this fact regardless of the results shown in the Weight on Front/Rear Motor fields.



NOTE: The *Instructions* link at the top of the M3D Placement Calculator page provides complete instructions for using the M3D Placement Calculator.

GENERAL HANGING CONSIDERATIONS

Before starting the actual array assembly and hanging process, review this section:

DO'S AND DON'TS

DO: Use only properly trained personnel to assemble and hang M3D arrays.

DO: Pay attention at all times when moving the array with a motor system. It is often difficult to see the physical orientation when you are very close to the array. Have a spotter, as shown in Figure 6, provide "a second set of eyes" at a position different from the motor operator.



Figure 6: Using a spotter as a "second set of eyes"

DON'T: Place hands between the cabinets.

DON'T: Use the rear cabinet ring/stud fittings for rigging cabinets or pull back. Use them for system cable support *only*. (Refer to the *M3D Operating Instructions* for cabling details.)

DON'T: Allow the center of gravity to move outside of the MTG-3D Top Grid once it is in its final trimmed position.

The M3D's rigging system is designed to be rigid, which allows for tilting up or down while maintaining the set relative splay between cabinets and alleviating the need for any pull back to be used.

LIFTING MECHANISMS

The number and lift capacity of chain motors used to lift the array are dependent on the array's combined weight, including the weight of any underhung clusters, and its orientation and splay. For a smaller array, it may be sufficient to use 1-ton motors, but for larger arrays, 2-ton motors may be necessary.

The lift capacity of any single motor or set (in a four-hoist configuration) of motors must be sized to support the entire weight of the array, including cable. When you are assembling the array, as the cabinets are attached, level the bottom cabinet to allow the next waiting block to be attached. Because there is often a vertical curve in the array, the upper cabinets have an increasing uptilt. At some point, depending on the vertical splay angles used, the rear motor(s) may not be supporting any weight. At this point, the front motor(s) must support the entire weight of the array while it is being assembled.

Conversely, once the array is assembled and flown into its final position, it is likely that the MTG-3D Top Grid will be much closer to level. In this configuration, the majority of the weight then shifts to the rear motor(s). If the array has downtilt and a curve is being used, the weight may then shift closer to the rear motor(s).

Furthermore, when you are using three or four motors and lifting the array during assembly, the array may not be level in the other plane (onstage vs. offstage). Further weight will shift onto the highest motor, thus requiring that motor to have a larger capacity.

The MTG-3D Top Grid is designed to have the motors attached to its pickup points at either the center set of the MTG-3D Top Grid's main frame, the four corner sets on the main frame, or the front and rear sets of tabs on the extension frame in its retracted or extended position.

Refer to the rigging configurations and their associated tables in "Appendix A — Configurations and Load Ratings," for details on allowable weights, pickup points, bridle lengths, and the maximum allowable number of loudspeakers for the configuration you will be rigging.

USE FRONT AND BACK MOTORS WHENEVER POSSIBLE

Front-to-back bridle point configurations, illustrated in Figure 7 and configurations A, E, and F in “Appendix A — Configurations and Load Ratings,” allow the use of motors to provide the necessary vertical tilt to the array. This provides the easiest configuration to use for trimming vertical tilt for an array.

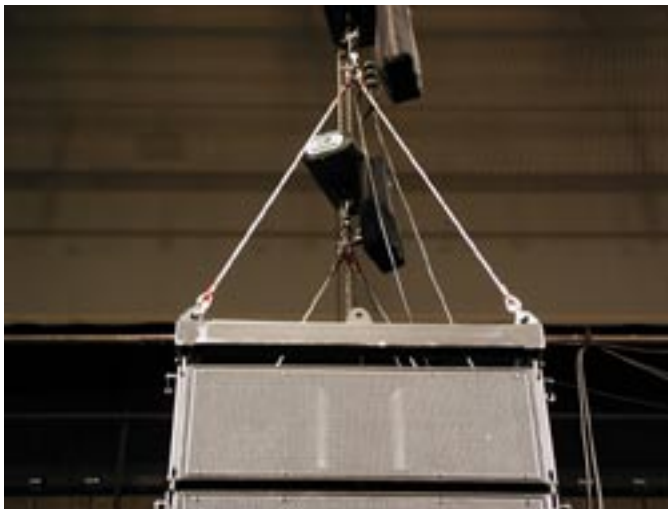

Figure 7. Bridles may be used in a front-to-back hanging configuration

If front and back motors cannot be used to provide the required vertical tilt of an array, such as configurations B, C, and D in “Appendix A — Configurations and Load Ratings,” the technician can use the variable tilt capability of the MTG-3D Top Grid, to achieve the desired vertical tilt angle for the array. Refer to the section “MTG-3D Top Grid to First M3D Angle Adjustment.”

NOTE: When using chains or making custom bridle lengths to achieve vertical tilt, be sure the center of gravity of the final hung array is within the allowable limits of the MTG-3D Top Grid. (See “M3D Placement Calculator.”)

TIP: Some venues, such as theaters, have only side-to-side motor points available through the ceiling plaster. In this case, you can rig two front/rear motors through the same ceiling hole, but attach them separately to the venue’s structural steel beams, provided that the single point is sufficiently rated for the entire weight of the array. The two steel cable sets must be held together with a loose shackle slightly below the plaster ceiling to prevent damage to the ceiling as the chain or steel pulls sideways when the array is raised to its desired position.

CHOOSING PICKUP POINTS

When choosing rigging points, refer to “Appendix A — Configurations and Load Ratings,” for various hanging configurations, maximum weights, bridle lengths, and array limits for 5:1 and 7:1 safety factors. Use these values as applicable rigging for the venue.

It is also important to keep in mind the following considerations:

1. The most flexible hanging configuration is one similar to that shown in the section “Configuration F” in Appendix A to hang the array directly from a venue’s structural beam without using bridles. Fewer bridles will improve the efficiency of rigging, adjusting vertical trim and adjusting horizontal orientation.

2. Although you may have double the ratio of motor lift capacity versus array weight, the venue needs to support only the weight of the array plus rigging and motors. Refer to “Appendix A — Configurations and Load Ratings” for various configurations and accompanying tables listing the allowable weights, bridle lengths, and number of M3Ds for various hanging configurations.
3. The array may develop as much as 3 feet of downstage (front) curve (see Figure 8) while being assembled. Often, the array will be assembled near the downstage edge or a similar situation. Calculate the depth of the system to ensure that the lower M3Ds will be able to be attached to the bottom of the array as it moves downstage during assembly.

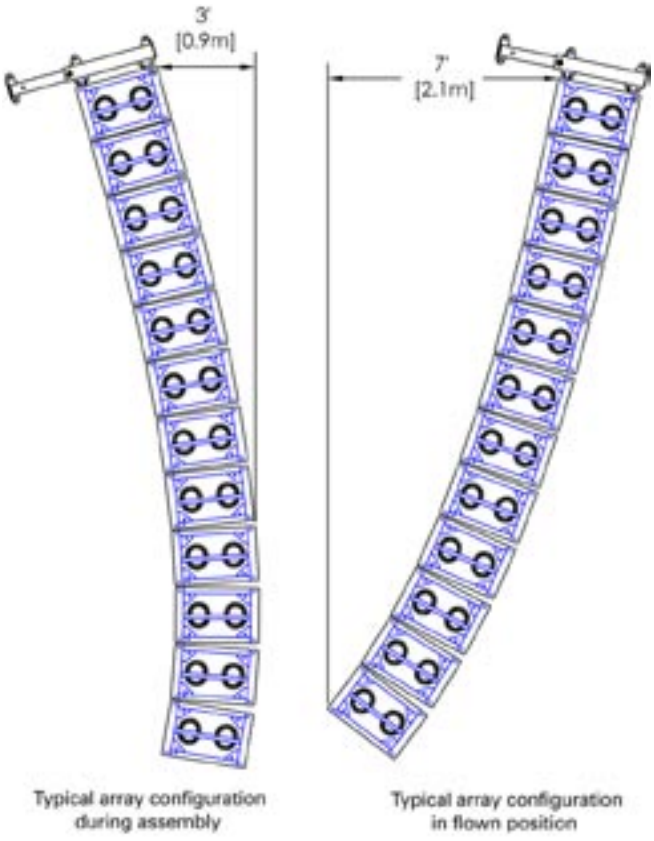

Figure 8. M3D array 12-deep side view during assembly and in flown position

4. The array may develop as much as 7 feet of upstage (rear) curve (see Figure 8) when flown into position. If there is a wall or upstage structure, calculate the depth of the system to ensure that it can be flown into its intended position after assembly and vertical trim is applied. The M3D Placement Calculator will provide the total array depth.



TIP: If the bottom of the array ends up being too far downstage during assembly, have stagehands breast it upstage until assembly is complete and it is flown to its final trim position.

5. It is often necessary to increase the stability of an array in venues with very high structural steel from which the array is suspended. The rigging points can be located a small distance, that is, 6 inches (15.24 cm) diagonally, from the MTG-3D Top Grid dimensions for a four-motor configuration. For a two-motor configuration, the rigging points can be located a small distance outside of the MTG-3D Top Grid’s depth, as shown in Figure 9.

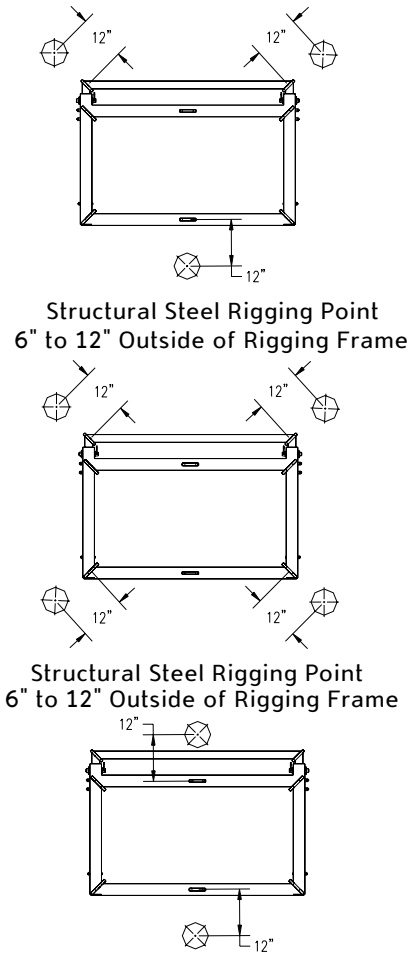

Figure 9. Example of wide rigging

In the configurations shown in Figure 9, the motors will be outside of the actual MTG-3D Top Grid dimensions. The technician will need to pull the motors in to attach them to the MTG-3D Top Grid. When the array is flown into position, it will find its own center of gravity between the motors. In windy conditions, this will also reduce swaying. This method minimizes any chance of a cable pic turning the array. If three or four motors are used and the array is slightly off its ideal horizontal angle, individual motors can then be used to turn the array once it is close to its final trimmed position.

ARRAY ASSEMBLY AND ANGLE ADJUSTMENT

You will need the following items for assembling the array and adjusting the angle:

- Quick Release Pins (QRPs)
- Cable assembly
- Alignment block (optional)
- Vertical angle configuration

STARTING ARRAY ASSEMBLY

After determining that you have all the necessary equipment and tools, proceed as follows:

1. Choose the appropriate motor points for the rigger to prepare the ground rigging of a hanging configuration, selecting from the options shown in “Appendix A — Configurations and Load Ratings.”
2. Once the points have been rigged, check for accuracy and ensure that the climbing riggers have finished all the points for the array before applying any weight to these points.
3. Apply power to the motors, checking for correct electrical phase (chain movement direction — see Figure 10). Change phase if necessary.



Figure 10. Checking phase (chain direction)

4. Run the chain through the motors until they are approximately 2 feet off the ground.
5. Attach the chain bags and feed the unused chain into the bag.
6. If using 2-ton motors, check for any twists in the overhead chain and correct if necessary (see Figure 11).



Figure 11. Rigger checking overhead chain

STACKING AN M3D ARRAY

ATTACHING MOTORS TO THE MTG-3D TOP GRID

Use rated steel cables and shackles when attaching motors to the MTG-3D Top Grid, as shown in Figure 12. The MTG-3D Top Grid will accommodate 5/8-inch and 3/4-inch shackle sizes on its pickup points.



Figure 12. Attaching motors or bridle legs to the MTG-3D Top Grid

The extension frame on the MTG-3D Top Grid is provided to help keep the center of gravity evenly distributed between the front and back points. This frame can be used in either the retracted or the extended positions, depending on which choice will provide the most even weight distribution when the array is in its final trimmed configuration.

The M3D Placement Calculator provides weight information on the front and back loads to help select the correct pickup lotions (Back Rigging Point [BRP] 1, BRP 2, or BRP 3) prior to the array being rigged. However, during assembly it may be necessary for the front or rear motors to temporarily support the entire weight of the array.

The allowable system center of gravity range must be within the front rigging point and one of the pickup choices provided, as illustrated in Figure 34 on page 26.

- BRP 1 from the main frame
- BRP 2 from the extension frame retracted
- BRP 3 from the extension frame extended

CAUTION: An array in which the center of gravity falls outside the allowable range of the MTG-3D Top Grid, once it is in its final trimmed position, is unstable and therefore unacceptable!

Refer to “Appendix A — Configurations and Load Ratings” for allowable weights, bridle lengths, and number of M3D loudspeakers.

CAUTION: Always use properly rated rigging shackles, chain, and hardware to attach the motors to the MTG-3D Top Grid. Be sure that the motors, hardware, and rigging points are sized appropriately for the entire weight of the array. The M3D Placement Calculator can help in determining the load of the system you are planning to hang.

ATTACHING M3DS TO THE MTG-3D TOP GRID

Use properly rated hardware to attach the rigging steel and motors to the MTG-3D Top Grid.

CAUTION: Everyone involved in assembling an array should be coached not to place their hands between the cabinets and the frames.

1. Once the motors are attached to the MTG-3D Top Grid, raise the MTG-3D Top Grid, as shown in Figure 13, to the necessary working height in preparation for attaching the first block of M3Ds. Adjust the MTG-3D Top Grid to be parallel with the top M3D of the block.



Figure 13. The MTG-3D Top Grid raised for pick up of the first M3D block

2. Carefully lower the MTG-3D Top Grid, positioning it just over the top M3D in the block, as shown in Figure 14.



Figure 14. The MTG-3D Top Grid positioned over the first M3D block

ADJUSTING ANGLES

By using both MAPP Online and the M3D Placement Calculator, you should now have determined the required tilt for the MTG-3D Top Grid and splay angles between elements for your array.

The M3D Placement Calculator (see “M3D Placement Calculator”) also provides a warning indication if the center of gravity falls too close to, or outside of, the front or back point that was chosen in the array’s final configuration.

MTG-3D TOP GRID TO FIRST M3D ANGLE ADJUSTMENT

The MTG-3D Top Grid allows for an adjustment of 0˚ to ±5˚ between the MTG-3D Top Grid and the first M3D loudspeaker.

If your configuration is front-to-back type A, E, or F as described in “Appendix A — Configurations and Load Ratings,” the entire vertical array of M3D loudspeakers can easily be tilted up or down to help focus the array’s coverage onto a target area by adjusting the front and back motor points.

The total allowable tilt of the MTG-3D Top Grid with an array hung under it is ±25˚, provided that the center of gravity of the array remains inside the MTG-3D Top Grid.

CAUTION: Note that the weight on each motor shown by the M3D Placement Calculator is the static load when the loudspeaker array is in its final position and DOES NOT calculate dynamic forces induced during setup. Each set of front and back or side-to-side motors should be sized to withstand the full weight of the loudspeaker array.

If the array must be hung in a side-to-side hanging configuration (configuration B, C, or D in “Appendix A — Configurations and Load Ratings”), you can set the final rigging tilt angle for the array by using the MTG-3D Top Grid’s rear link adjustment. Using the links of deck chains or using different lengths on the two bridle legs from a motor are effective methods of achieving tilt on a MTG-3D Top Grid.

Figure 15 and Figure 17 illustrate how the MTG-3D Top Grid's CamLinks and rear links can be used for a necessary tilt adjustment of the first M3D.

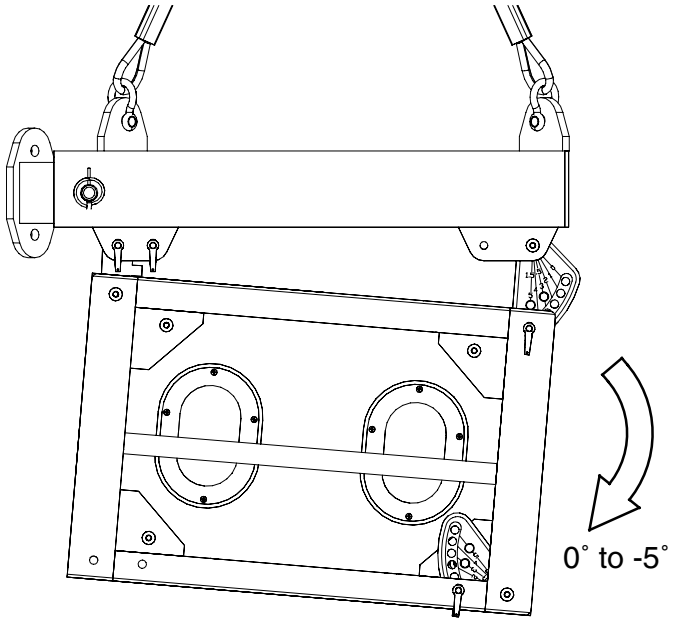

Figure 15. The MTG-3D Top Grid’s link in retracted position

Adjusting Top M3D Top Grid Downtilt

With the MTG-3D Top Grid’s rear link in the retracted position (as shown in Figure 15 and Figure 16), the front CamLink can be adjusted to provide between 0˚ and 5˚ of downtilt. The MTG-3D Top Grid’s rear link works in combination with the front CamLink to produce the desired angle of downtilt.



Figure 16. The QRP securing rear link in retracted position

Adjusting MTG-3D Top Grid Uptilt

With the MTG-3D Top Grid's rear link in the extended position (as shown in Figure 17 and Figure 18), the front CamLink can be adjusted to provide between 1˚ and 5˚ of uptilt. The MTG-3D Top Grid's rear link works in combination with its front CamLink to produce the desired angle of uptilt.

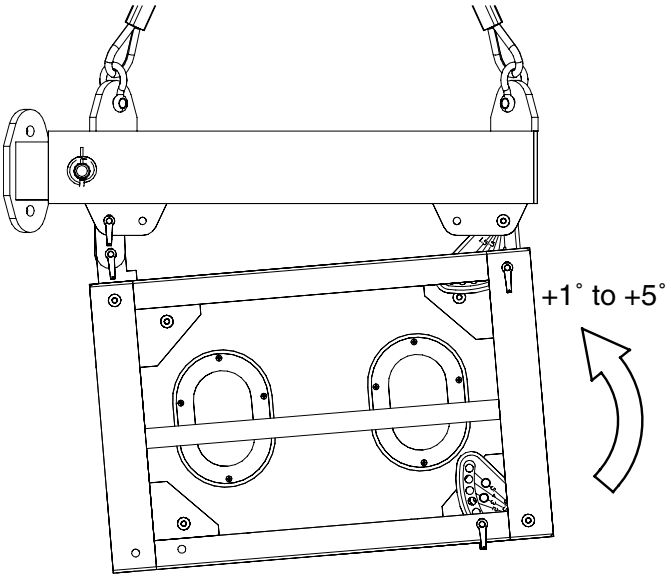

Figure 17. The MTG-3D Top Grid's link in the extended position

Figure 18 shows the MTG-3D Top Grid with the rear link extended. Note the direction of tilt with this configuration.



Figure 18. MTG-3D with the rear link extended

CAUTION: The MTG-3D Top Grid's rear link must ALWAYS be installed when hanging an M3D system. NEVER install a QRP into the MTG-3D Top Grid without using the MTG-3D Top Grid's 5˚ rear link.

1. Once the loudspeaker's rear links are pinned into the retracted or extended position as required of the MTG-3D Top Grid's rear link, unpin the CamLinks from the MTG-3D MTG-3D Top Grid as shown in Figure 19.

TIP: You can mount laser devices, such as item 4 in Figure 5, on top of the array to determine the top cabinet orientation with respect to actual venue seating. Additionally, you can mount the laser on any cabinet in the array to determine that the system is properly aimed. These devices can be configured to be controlled from the ground.



Figure 19. Removing the QRP from the MTG-3D Top Grid's front CamLink

2. Adjust the motors to tilt the MTG-3D Top Grid and allow the CamLink to move until the QRP can be inserted into the required hole.
3. Insert the QRP into the desired CamLink hole as shown in Figure 20.



Figure 20. QRP inserted at 3°

ADJUSTING SPLAY ANGLE IN AN ARRAY

1. Once all four QRPs are installed in the top cabinet of the block, bump the motors out to take tension off the cabinets.
2. If splay adjustment is required between M3Ds, remove the QRPs from the CamLinks on either side of the uppermost set of cabinets.
3. Bump the motors as needed to relieve sheer stress on the QRPs in order to free them from the holes.
4. Bump the motors to pull the cabinet further upward until the desired CamLink hole is correctly aligned.

CAUTION: Do not hold the CamLink by placing your fingers between the cabinets .

5. Check the hole alignment by moving the CamLink from the side of the cabinet as it swings through the rigging frames.

CAUTION: Always check that all four QRPs are fully inserted into the MTG-3D Top Grid and loudspeaker's end frames before lifting an array.

6. A stepped alignment block as shown in Figure 21 is shipped with each MTG-3D Top Grid. Additional alignment blocks are available from Meyer Sound. The alignment block helps set splay angles between cabinets. The stepped block maintains the gap between the cabinet's front edges, producing a splay angle.

TIP: Once the CamLink is close to its desired position, hold the pin inside the end frame's hole while gently pushing it into the CamLink. Have the motors bumped out (up) and catch the hole as it passes. This same technique works in reverse when retracting the pin to catch it as the sheer stress is released.

7. Place the alignment block between the M3D's front edge while the CamLink's QRPs are removed as shown in Figure 21.
8. While resting the adjustment block's desired gap distance on the center of the lower cabinet, bump the motors in (down) so that the cabinets are just resting on the block.

9. Swing the CamLink into place, and set the QRP into the frame.

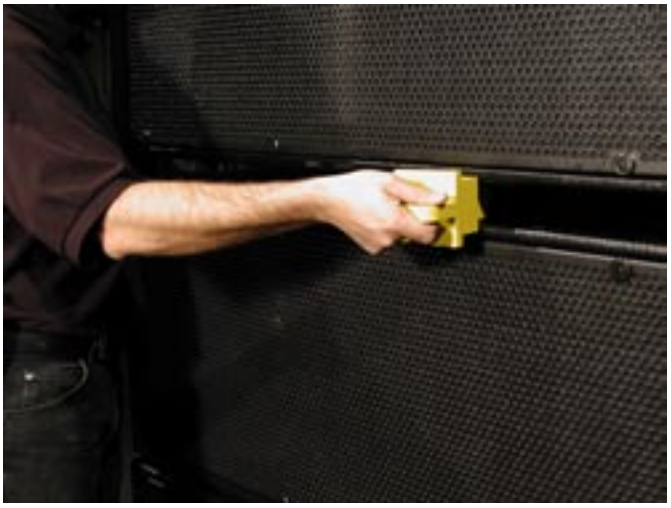

Figure 21. Adjusting angle using the alignment block

CAUTION: When the QRPs are removed from the CamLinks, take care when adjusting the motor hoists. If the motors are raised too high with only the rear link's QRPs installed, the lower loudspeaker block can swing under the upper block of flown loudspeakers. Always use small motor bumps when rigging the system while in this state.

REMOVING CASTER RAILS

1. Once the first block of M3D loudspeakers is lifted into the air, fly the assembly to a working height (about waist high) that will allow easy access and removal of the caster rails from the end frames.
2. Unpin the caster rails as shown in Figure 22 and reinsert one QRP to secure the CamLink. Store the second pin in the rear link hole. Lift the bottom plate of the caster rail by leveling the bottom, relieving the stress on the end frame. Slide them off the end frames as shown in Figure 23.



Figure 22. Unpinning caster rail

TIP: For easier management of the caster rails, stack them in an empty motor case (with lids open if necessary) after removal. They may then be rolled away and returned for strike without carrying each caster rail individually to storage.



Figure 23. Removing caster rail

3. Move the CamLink to the 0˚ position and secure with a QRP as shown in Figure 24.



Figure 24. Front CamLink in up position, QRP inserted

You are now ready to assemble another block of loudspeakers to the array.

ADDING A BLOCK OF M3DS TO AN ARRAY

1. Raise the assembled array so that the next block of cabinets can be moved into place. The lowest cabinet of the hung array should be level to the next block. Have the motor operator adjust the front and back hoists as necessary.
2. Fold the rear link out of the top cabinet and hold it in place using a QRP as shown in Figure 25.

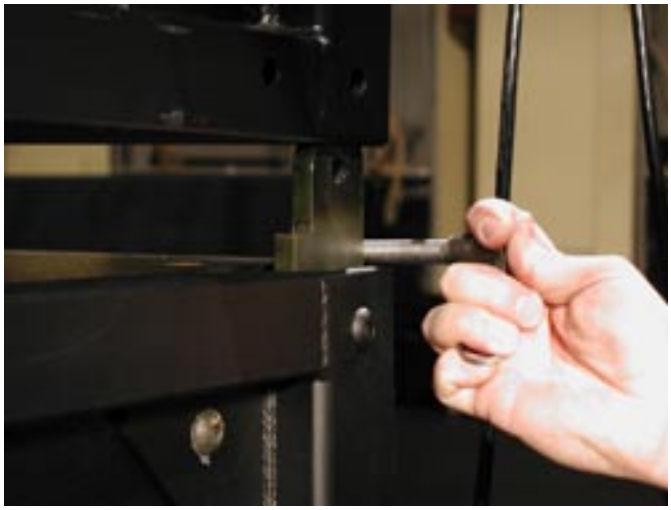

Figure 25. Holding the rear link using a QRP

3. Lower the flown assembly down onto the waiting block of M3D loudspeakers.
4. While the upper array is still floating, visually align the cabinets to be sure the CamLinks will not bind into the mating end frame.
5. Once the rear link is sitting inside the end frame, move the QRP into the end frame's hole, awaiting alignment with the rear link as shown in Figure 26.



TIP: Use small motor bumps (small movements up or down) as the alignment gets closer. You may find that going "down" past the alignment hole and then bumping up gives you finer control.

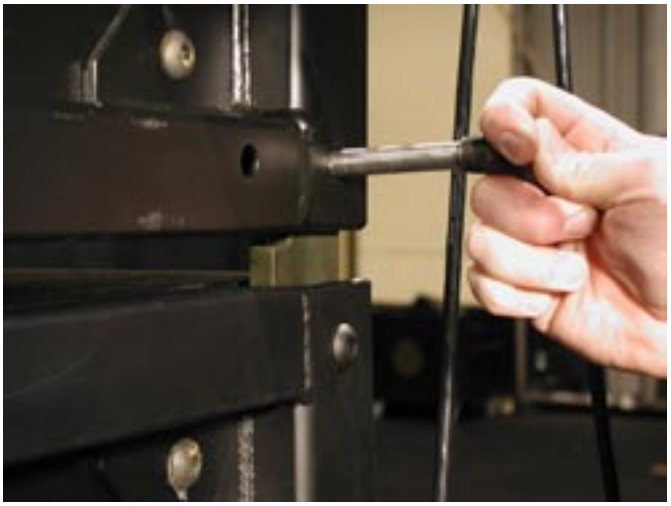

Figure 26. Inserting QRP into rear link

6. Attach the two rear QRPs first, as shown in Figure 27, keeping the front CamLinks tucked away in the frame.
7. If the array isn't level, left to right, use the motors to adjust the flown block of cabinets (if using three or four motor hoists).
8. If using only two motors (front and back), pin the first (or lowest) rear link in, bump the motors in, and then attach the second pin.

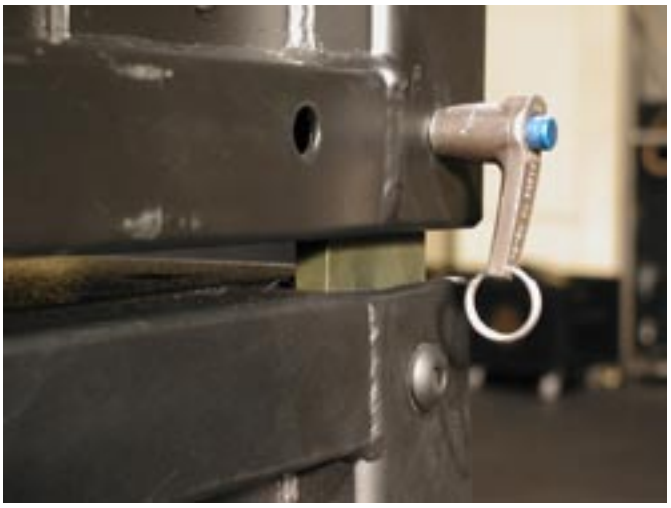

Figure 27. Rear link QRP inserted

TIP: Here is another technique for setting the rear link. Position the upper array approximately 1 inch (25 mm) above the waiting cabinet block. Push the flown array behind the lower block approximately 2 inches (50 mm). Fold out the rear link(s) and rotate them into the end frame of the upper cabinet while swinging the upper array back to its original position.

9. Once the two rear links are connected, unpin the CamLinks and set the pin to the desired hole in the CamLink as shown in Figure 28.



Figure 28. Inserting QRP at 3˚

10. Use up or down motor bumps to pivot (or hinge) the lower block to the upper cabinets, allowing you to set the QRP into the desired CamLink hole as shown in Figure 28 and secure it as shown in Figure 29.



Figure 29. QRP fully inserted into 3˚ hole



Figure 30. 0.25-inch (6.35 mm) drift punch

NOTE: If cabinets are on uneven ground or aligned at a slight diagonal, the front and rear CamLink/frame holes may be only partially aligned. Insert a 0.25-inch (6.35 mm) drift punch (see Figure 30) into the frame hole, and “lever” the CamLink into place by pushing or “wiggling” it in the desired direction. A drift punch is available from a local hardware store.

FLYING A COMPLETED ARRAY

Figure 31 shows an example of rigging points chalked on the ground, a fully rigged block of three M3D loudspeakers with an MTG-3D Top Grid mounted, positioned, and ready to fly.

Use the following procedure to fly rigged blocks and arrays into their final position.



Figure 31. Fully rigged M3D block ready to fly

1. If the array has front-to-back rigging hoists (configuration type A, E, or F as described in "Appendix A — Configurations and Load Ratings"), raise the rear motors until they are bearing weight along with the front motors.
2. Raise the array to its final trim height.
3. If the array has front-to-back rigging, adjust the array's vertical tilt to the desired angle using the front and rear motors as required.
4. If the array has side-to-side rigging, (configuration type B, C, or D as described in "Appendix A — Configurations and Load Ratings"), check that the array angle set in the procedure described in "Adjusting Angles" is correct in the flown array and make any final adjustments as needed.
5. After the M3D array has been flown into its final vertical position, check the horizontal angle of the array. If the array is not parallel to the stage or the array is not aimed in the desired direction, use rigging ropes tied to the lower sides of the array to rotate the array into its final, correct position.

TIP: You can quickly check the vertical orientation by looking through the horizontal spaces between the cabinets. It is usually easy to see light through these spaces in an outdoor venue. Often the cabinets are in a darker area than the daylight and, using this method, it is possible to match the two sides and see where they are focused. It is also possible to check other locations in the venue, such as the FOH (front of house) mixer area. Binoculars, item 1 in Figure 5, are also a helpful tool for seeing these gaps from a distance.

Cable tie-down rings at the rear of the M3D cabinet are provided as shown in Figure 32.

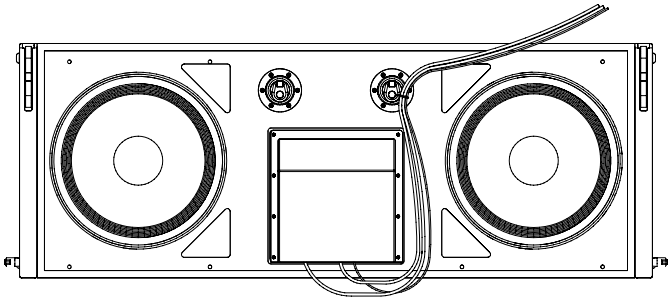

Figure 32. M3D cable tie-down rings

Cable connectors are protected from wet weather by the rain hood as shown in Figure 32.

CAUTION: Do not use the cable tie-down rings at the rear of the M3D for pullback or position adjustment of the array.

INCLUDING M3D-SUBS IN AN ARRAY

M3D-Subs can be included in an array in the same manner as M3D loudspeakers.

Refer to the M3D Operating Instructions for details on the use of M3D-Subs in an array and suggestions for the optimum configuration with M3D loudspeakers to achieve the desired coverage and sound pressure level (SPL) for a venue while maintaining maximum headroom for all elements of the array.

The M3D-Subs may be stacked up to four high for transport and for use. They usually don't need to be restacked in the truck or in the venue, so they require fewer stagehands. The cable harnesses can be built for modules of three or six, resulting in a very efficient setup and strike.

STRIKING THE ARRAY

Taking down an M3D system is basically the reverse of the installation process.

1. Attach the caster rails to the lowest cabinet as the array is being lowered and when the bottom loudspeaker is at about waist height.
2. Level the bottom cabinet to keep it as parallel as possible to the floor.
3. While applying some pull on the QRPs holding the CamLinks that you want to restore to 0˚, lower the array onto the caster rails.
4. Stop the motors once both QRPs are pulled out from the array.
5. Slowly bump the motors down until you can reinsert the QRPs into the 0˚ hole.
6. Repeat this process until the first block is fully restored to 0˚.
7. Break the block away from the array by pulling all four QRPs, and then bumping the array up to allow the lowest block of cabinets to be wheeled away.
8. Repeat this process until all blocks are removed from the array and the MTG-3D Top Grid is removed from the rigging shackles.

TIP: When touring or using the same array multiple times, you can leave the set vertical splay angles in the blocks of cabinets while in transport for speedier strike and setup as shown in Figure 33. This also minimizes the adjustments made between cabinets when touring.



Figure 33. M3D blocks ready for transport with vertical splay left in

TIP: Note that the MTG-3D Top Grid is attached to the block at the right in Figure 33. This provides a convenient method of transport, and the top block in the array is ready for assembly at the next venue.

APPENDIX A — CONFIGURATIONS AND LOAD RATINGS

GENERAL

This appendix contains various hanging configurations for M3D loudspeakers using an MTG-3D Top Grid. This appendix also contains allowable configurations of bridle attachments, bridle lengths, attachment points on the MTG-3D Top Grid, the maximum weight, and maximum number of M3D loudspeakers for each configuration.

The maximum number of M3Ds that may be hung in each pickup configuration is based on the M3D weight of 415 pounds. The suspended weight listed in these tables includes loudspeakers, the MTG-3D Top Grid, and all auxiliary equipment supported by the rigging motor. The weight values listed in the tables are the maximum allowable weights and not the actual weight of the array.

CAUTION: The weight of any additional items, such as fill loudspeakers, hung with the array must be considered when calculating the maximum load.

ABOUT THESE LOAD RATINGS

All the load ratings in this appendix rate the M3D rigging system for the shifts in weight that can occur during installation of an array while maintaining a 5:1 or 7:1 safety factor. When flying an M3D array as discussed in this manual, the entire weight of the array can shift completely to either the front or the back motor or set of motors. We have maintained this rating in all configurations shown in this appendix in order to comply with the majority of regional safety codes for theatrical rigging practices.

Scenarios shown in A, E, F, and G of this appendix assume a “worst case” load between any single motor or pair of motors and steel cable sets. If careful monitoring of the weight distribution is maintained during the lifting and final trimmed position of an array, the motors and rigging hardware capacities shown in the tables may be adjusted accordingly to maintain a rated working load for your region.

MEASURED ANGLES

Two angles are used in the following tables. The values are shown in two column: one is labeled “Angle between Bridle and Grid” the other is labeled “Max Top Grid Angle.”

Angle Between Bridle and Grid

This angle (α) is measured between the top of the MTG-3D Top Grid and an attached bridle leg. In the following examples, the bridle legs are presumed to be of equal length so the angle formed by each bridle leg and the top grid are equal.

Maximum Top Grid Angle

This angle is used to determine the maximum amount of tilt of the MTG-3D Top Grid from horizontal. The values in this column are the maximum tilt angles allowed.

NOTE: The maximum top grid angle does not include any array tilt obtained by using the MTG-3D Top Grid’s front and rear links.

Bridle Leg Lengths

The various bridle lengths listed in the following tables are the minimum required to support the corresponding number of M3Ds listed.

CAUTION: Using a bridle leg shorter than the recommended length may damage the MTG-3D.

CONFIGURATION A

Figure 34 illustrates the hanging configurations that are considered in the calculations listed in Table 3 and Table 4. In these configurations, the distance between the attachment points on the MTG-3D Top Grid is 52.5 inches (133.35 cm).

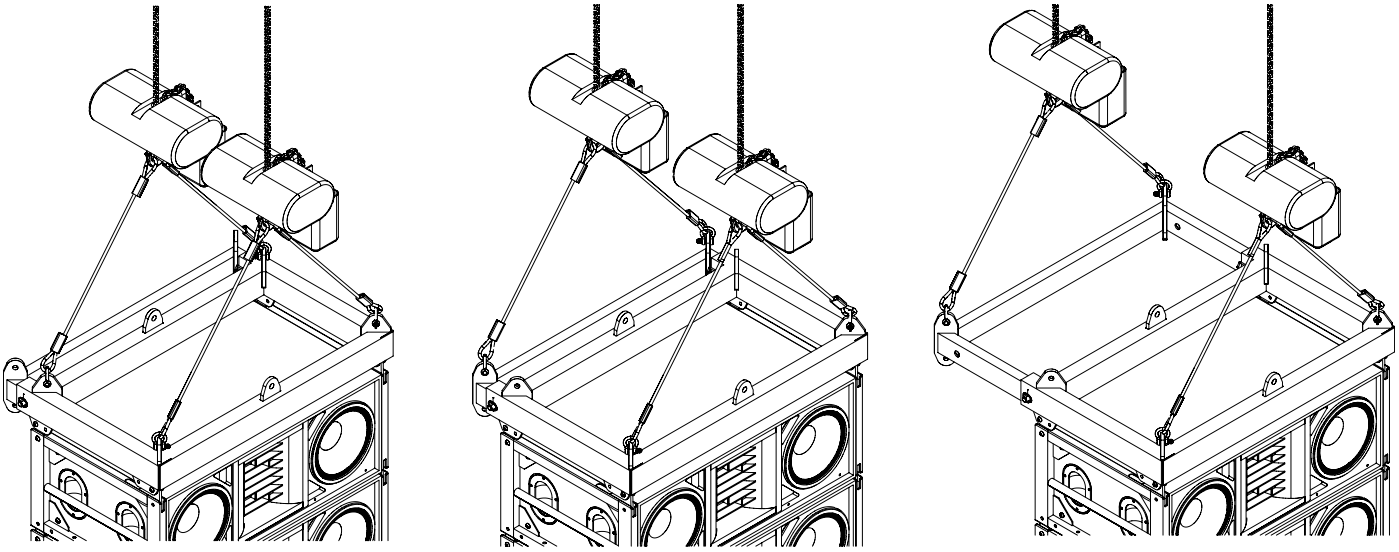

Back Rigging Point (BRP) 1 BRP 2 BRP 3

Figure 34. Bridles in front-to-back configuration with the rear extension frame either retracted or extended

Table 3. Suspended Weight and Quantity of M3D Loudspeakers with Varying Bridle Leg Lengths

Bridle Leg Lengths	Angle Between Bridle and Grid α (deg)	Max Top Grid Angle	5:1 Safety Factor		7:1 Safety Factor	
			Maximum Allowable Suspended Weight	Maximum Allowable Qty. of M3Ds	Maximum Allowable Suspended Weight	Maximum Allowable Qty. of M3Ds
3.0 ft. (0.91 m)	43˚	±25˚	2406 lbs (1091.34 kg)	1 to 5	1718 lbs (779.27 kg)	1 to 3
3.5 ft. (1.07 m)	51˚	±25˚	3202 lbs (1452.40 kg)	7	2287 lbs (1037.37 kg)	4
4.0 ft. (1.22 m)	57˚	±25˚	3924 lbs (1779.90 kg)	8	2803 lbs (1271.42 kg)	6
4.5 ft. (1.37 m)	61˚	±25˚	4608 lbs (2090.15 kg)	10	3291 lbs (1492.77 kg)	7
5.0 ft. (1.52 m)	63˚	±25˚	5268 lbs (2389.52 kg)	12	3763 lbs (1706.87 kg)	8
5.5 ft. (1.68 m)	65˚	±25˚	5913 lbs (2682.09 kg)	13	4224 lbs (1915.97 kg)	9
6.0 ft. (1.83 m)	69˚	±25˚	6547 lbs (2969.67 kg)	15	4676 lbs (2121.00 kg)	10
6.5 ft. (1.98 m)	71˚	±25˚	7172 lbs (3253.16 kg)	16	5123 lbs (2323.75 kg)	11
7.0 ft. (2.13 m)	72˚	±25˚	7172 lbs (3253.16 kg)	16	5565 lbs (2524.24 kg)	12
7.5 ft. (2.29 m)	73˚	±25˚	7172 lbs (3253.16 kg)	16	6004 lbs (2723.37 kg)	13
8.0 ft. (2.44 m)	74˚	±25˚	7172 lbs (3253.16 kg)	16	6441 lbs (2921.59 kg)	14
8.5 ft. (2.59 m)	75˚	±25˚	7172 lbs (3253.16 kg)	16	6875 lbs (3118.45 kg)	15
9.0 ft. (2.74 m)	76˚	±25˚	7172 lbs (3253.16 kg)	16	7307 lbs (3314.40 kg)	16

Table 4. Minimum Allowable Bridle Leg Lengths with Varying Number of M3D Loudspeakers

Maximum Number of M3Ds	5:1 Safety Factor		7:1 Safety Factor	
	Maximum Angle Between Bridle and Grid α (deg)	Minimum Allowable Bridle Leg Lengths, L	Maximum Angle Between Bridle and Grid α (deg)	Minimum Allowable Bridle Leg Lengths, L
1	43˚	3.00 ft. (0.91 m)	47˚	3.25 ft. (0.99 m)
2	43˚	3.00 ft. (0.91 m)	47˚	3.25 ft. (0.99 m)
3	43˚	3.00 ft. (0.91 m)	47˚	3.25 ft. (0.99 m)
4	43˚	3.00 ft. (0.91 m)	47˚	3.25 ft. (0.99 m)
5	43˚	3.00 ft. (0.91 m)	52˚	3.75 ft. (1.14 m)
6	47˚	3.25 ft. (0.99 m)	57˚	4.00 ft. (1.22 m)
7	51˚	3.50 ft. (1.07 m)	61˚	4.50 ft. (1.37 m)
8	57˚	4.00 ft. (1.22 m)	63˚	5.00 ft. (1.52 m)
9	59˚	4.25 ft. (1.30 m)	65˚	5.50 ft. (1.68 m)
10	61˚	4.50 ft. (1.37 m)	68˚	5.75 ft. (1.75 m)
11	62˚	4.75 ft. (1.45 m)	70˚	6.25 ft. (1.91 m)
12	63˚	5.00 ft. (1.52 m)	72˚	6.75 ft. (2.06 m)
13	65˚	5.50 ft. (1.68 m)	73˚	7.25 ft. (2.21 m)
14	68˚	5.75 ft. (1.75 m)	74˚	7.75 ft. (2.36 m)
15	70˚	6.25 ft. (1.91 m)	75˚	8.25 ft. (2.51 m)
16	71˚	6.50 ft. (1.98 m)	76˚	8.75 ft. (2.67 m)

The suspended weight allowable for each bridle length is shown for both a 5:1 and a 7:1 safety factor. These weights are based on total suspended weight, including M3D loudspeakers and an MTG-3D Top Grid.

NOTE: Each motor must be rated to support the total weight of the entire array, including any added equipment or loudspeakers.

The distance between lifting lugs in the configurations shown in Figure 34 is 52.5 inches (133.35 cm).

The minimum allowable bridle lengths shown in Table 4 are based on both a safety factor of 5:1 and a safety factor of 7:1. Use the appropriate value when using Table 4 to calculate allowable bridle lengths and allowable number of M3D loudspeakers that may be hung in a specific venue.

NOTE: The maximum number of M3D loudspeakers that may be hung in each pickup configuration is based on the M3D weight of 415 pounds. The suspended weight includes loudspeakers and an MTG-3D Top Grid.

CONFIGURATION B

Use Table 5 and Table 6 when the lifting configuration uses bridle legs spanning the short sides of the M3D as shown in Figure 35.

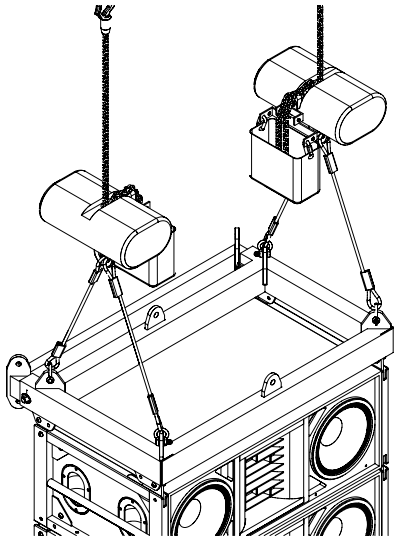

Figure 35. Using bridle leg short side pickup points (BRP 1)

Table 5: Suspended Weight and Quantity of M3D Loudspeakers with Varying Bridle Leg Lengths

Bridle Leg Lengths	Angle Between Bridle and Grid α (deg)	Max Top Grid Angle	5:1 Safety Factor		7:1 Safety Factor	
			Maximum Allowable Suspended Weight	Maximum Allowable Qty. of M3Ds	Maximum Allowable Suspended Weight	Maximum Allowable Qty. of M3Ds
2.0 ft. (0.61 m)	51˚	±25˚	3317 lbs (1504.57 kg)	7	2369 lbs (1074.56 kg)	5
2.5 ft. (0.76 m)	60˚	±25˚	4570 lbs (2072.92 kg)	10	3265 lbs (1480.98 kg)	7
3.0 ft. (0.91 m)	66˚	±25˚	5742 lbs (2604.53 kg)	13	4101 lbs (1860.18 kg)	9
3.5 ft. (1.07 m)	68˚	±25˚	6874 lbs (3117.99 kg)	15	4910 lbs (2227.14 kg)	11
4.0 ft. (1.22 m)	72˚	±25˚	7983 lbs (3621.03 kg)	16	5702 lbs (2586.38 kg)	13
4.5 ft. (1.37 m)	74˚	±25˚	7983 lbs (3621.03 kg)	16	6484 lbs (2941.09 kg)	15
5.0 ft. (1.52 m)	76˚	±25˚	7983 lbs (3621.03 kg)	16	7258 lbs (3292.17 kg)	16

Table 6. Minimum Allowable Bridle Leg Lengths with Varying Number of M3D Loudspeakers

Qty. of M3Ds	5:1 Safety Factor		7:1 Safety Factor	
	Angle Between Bridle and Grid α (deg)	Minimum Allowable Bridle Leg Lengths, L	Angle Between Bridle and Grid α (deg)	Minimum Allowable Bridle Leg Lengths, L
1	51˚	2.00 ft. (0.61 m)	51˚	2.00 ft. (0.61 m)
2	51˚	2.00 ft. (0.61 m)	51˚	2.00 ft. (0.61 m)
3	51˚	2.00 ft. (0.61 m)	51˚	2.00 ft. (0.61 m)
4	51˚	2.00 ft. (0.61 m)	51˚	2.00 ft. (0.61 m)
5	51˚	2.00 ft. (0.61 m)	51˚	2.00 ft. (0.61 m)
6	51˚	2.00 ft. (0.61 m)	56˚	2.25 ft. (0.69 m)
7	51˚	2.00 ft. (0.61 m)	60˚	2.50 ft. (0.76 m)
8	56˚	2.25 ft. (0.69 m)	63˚	2.75 ft. (0.84 m)
9	60˚	2.50 ft. (0.76 m)	66˚	3.00 ft. (0.91 m)
10	60˚	2.50 ft. (0.76 m)	68˚	3.50 ft. (1.07 m)
11	63˚	2.75 ft. (0.84 m)	71˚	3.75 ft. (1.14 m)
12	66˚	3.00 ft. (0.91 m)	71˚	3.75 ft. (1.14 m)
13	66˚	3.00 ft. (0.91 m)	72˚	4.00 ft. (1.22 m)
14	67˚	3.25 ft. (0.99 m)	73˚	4.25 ft. (1.30 m)
15	68˚	3.50 ft. (1.07 m)	74˚	4.75 ft. (1.45 m)
16	71˚	3.75 ft. (1.14 m)	76˚	5.00 ft. (1.52 m)

When calculating allowable lifting loads and bridle leg lengths for the lifting condition illustrated in Figure 35, use Table 5 and Table 6 to determine the maximum number of M3Ds and allowed bridle leg lengths required to conform to the appropriate safety factor for the venue.

The distance between lifting lugs in the configuration shown in Figure 35 is 29.35 inches (74.55 cm).

CONFIGURATION C

Use Table 7 and Table 8 when the bridle legs are parallel to the side of the M3D and when the rear pickup points are on the closed MTG-3D Top Grid extension as shown in Figure 36.

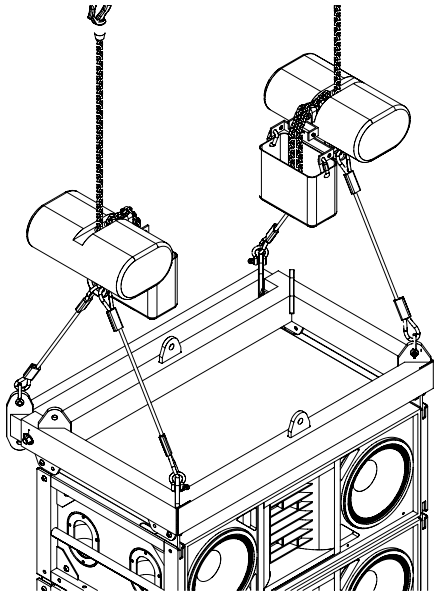

Figure 36. Using bridle leg short side pickup points (BRP 2)

Table 7. Suspended Weight and Quantity of M3D Loudspeakers with Varying Bridle Leg Lengths

Bridle Leg Lengths	Angle Between Bridle and Grid α (deg)	Max Top Grid Angle	5:1 Safety Factor		7:1 Safety Factor	
			Maximum Allowable Suspended Weight	Maximum Allowable Qty. of M3Ds	Maximum Allowable Suspended Weight	Maximum Allowable Qty. of M3Ds
2.0 ft. (0.61 m)	41˚	±25˚	2259 lbs (1024.67kg)	4	1614 lbs (732.10 kg)	3
2.5 ft. (0.76 m)	52˚	±25˚	3416 lbs (1549.47kg)	7	2440 lbs (1106.77 kg)	5
3.0 ft. (0.91 m)	60˚	±25˚	4438 lbs (2013.04 kg)	10	3170 lbs (1437.89 kg)	7
3.5 ft. (1.07 m)	64˚	±25˚	5402 lbs (2450.31 kg)	12	3859 lbs (1750.41 kg)	8
4.0 ft. (1.22 m)	67˚	±25˚	6335 lbs (2873.51 kg)	14	4525 lbs (2052.51 kg)	10
4.5 ft. (1.37 m)	70˚	±25˚	7248 lbs (3287.64 kg)	16	5177 lbs (2348.25 kg)	11
5.0 ft. (1.52 m)	72˚	±25˚	7248 lbs (3287.64 kg)	16	5820 lbs (2639.91 kg)	13
5.5 ft. (1.68 m)	74˚	±25˚	7248 lbs (3287.64 kg)	16	6457 lbs (2928.85 kg)	14
6.0 ft. (1.83 m)	75˚	±25˚	7248 lbs (3287.64 kg)	16	7089 lbs (3215.52 kg)	16

Table 8. Minimum Allowable Bridle Leg Lengths with Varying Number of M3D Loudspeakers

Qty. of M3Ds	5:1 Safety Factor		7:1 Safety Factor	
	Angle Between Bridle and Grid ∝ (deg)	Minimum Allowable Bridle Leg Lengths, L	Angle Between Bridle and Grid ∝ (deg)	Minimum Allowable Bridle Leg Lengths, L
2	43˚	2.25 ft. (0.69 m)	47˚	2.25 ft. (0.69 m)
3	43˚	2.25 ft. (0.69 m)	47˚	2.25 ft. (0.69 m)
4	43˚	2.25 ft. (0.69 m)	47˚	2.25 ft. (0.69 m)
5	43˚	2.25 ft. (0.69 m)	52˚	2.50 ft. (0.76 m)
6	47˚	2.25 ft. (0.69 m)	56˚	2.75 ft. (0.84 m)
7	52˚	2.50 ft. (0.76 m)	62˚	3.25 ft. (0.99 m)
8	56˚	2.75 ft. (0.84 m)	64˚	3.50 ft. (1.07 m)
9	60˚	3.00 ft. (0.91 m)	65˚	3.75 ft. (1.14 m)
10	60˚	3.00 ft. (0.91 m)	68˚	4.25 ft. (1.30 m)
11	62˚	3.25 ft. (0.99 m)	69˚	4.25 ft. (1.30 m)
12	64˚	3.50 ft. (1.07 m)	71˚	4.75 ft. (1.45 m)
13	65˚	3.75 ft. (1.14 m)	72˚	5.00 ft. (1.52 m)
14	67˚	4.00 ft. (1.22 m)	73˚	5.25 ft. (1.60 m)
15	69˚	4.25 ft. (1.30 m)	74˚	5.75 ft. (1.75 m)
16	70˚	4.50 ft. (1.37 m)	75˚	6.00 ft. (1.83 m)

When calculating allowable lifting loads and bridle leg lengths for the lifting condition illustrated in Figure 36, use Table 7 and Table 8 to determine the maximum number of M3Ds and the allowed bridle leg lengths required to conform to the appropriate safety factor for the venue.

The distance between lifting lugs in the configuration shown in Figure 36 is 36 inches (91.44 cm).

CONFIGURATION D

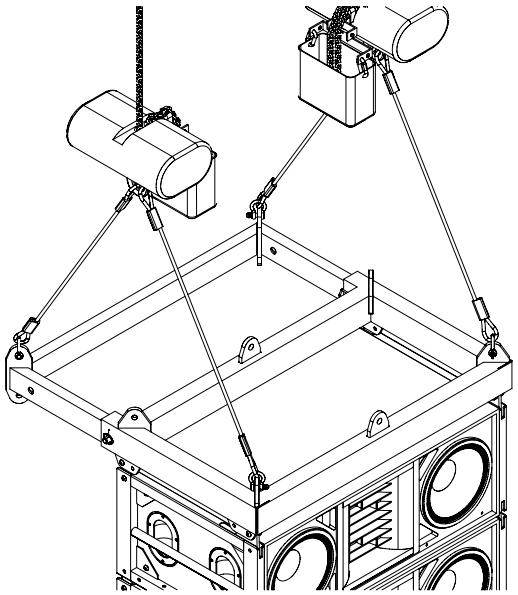

Figure 37. Bridle legs using attachment points on an extended MTG-3D Top Grid (BRP 3)

When using bridle legs spanning the short side of the M3D (front to back) with the pickup attached to the extended MTG-3D Top Grid pickup points as shown in Figure 37, use Table 9 and Table 10 to determine the maximum number of M3Ds and the allowed bridle leg lengths required to conform to the appropriate safety factor for the venue.

Table 9. Suspended Weight and Quantity of M3D Loudspeakers with Varying Bridle Leg Lengths

Bridle Leg Lengths	Angle Between Bridle and Grid α (deg)	Max Top Grid Angle	5:1 Safety Factor		7:1 Safety Factor	
			Maximum Allowable Suspended Weight	Maximum Allowable Qty. of M3Ds	Maximum Allowable Suspended Weight	Maximum Allowable Qty. of M3Ds
3.5 ft. (1.07 m)	47˚	±25˚	3102 lbs (1407.04 kg)	6	2216 lbs (1005.16 kg)	4
4.0 ft. (1.22 m)	55˚	±25˚	3818 lbs (1731.82 kg)	8	2727 lbs (1236.95 kg)	5
4.5 ft. (1.37 m)	60˚	±25˚	4494 lbs (2038.44 kg)	10	3210 lbs (1456.03 kg)	7
5.0 ft. (1.52 m)	62˚	±25˚	5145 lbs (2333.73 kg)	11	3675 lbs (1666.95 kg)	8
5.5 ft. (1.68 m)	66˚	±25˚	5780 lbs (2621.76 kg)	13	4129 lbs (1872.88 kg)	9
6.0 ft. (1.83 m)	68˚	±25˚	6404 lbs (2904.81 kg)	14	4574 lbs (2074.73 kg)	10
6.5 ft. (1.98 m)	71˚	±25˚	7019 lbs (3183.76 kg)	16	5014 lbs (2274.31 kg)	11
7.0 ft. (2.13 m)	72˚	±25˚	7019 lbs (3183.76 kg)	16	5449 lbs (2471.62 kg)	12
7.5 ft. (2.29 m)	73˚	±25˚	7019 lbs (3183.76 kg)	16	5880 lbs (2667.12 kg)	13
8.0 ft. (2.44 m)	74˚	±25˚	7019 lbs (3183.76 kg)	16	6309 lbs (2861.71 kg)	14
8.5 ft. (2.59 m)	75˚	±25˚	7019 lbs (3183.76 kg)	16	6736 lbs (3055.40 kg)	15
9.0 ft. (2.74 m)	76˚	±25˚	7019 lbs (3183.76 kg)	16	7160 lbs (3247.72 kg)	16

Table 10. Minimum Allowable Bridle Leg Lengths with Varying Number of M3D Loudspeakers

Qty. of M3Ds	5:1 Safety Factor		7:1 Safety Factor	
	Angle Between Bridle and Grid ∝ (deg)	Minimum Allowable Bridle Leg Lengths, L	Angle Between Bridle and Grid ∝ (deg)	Minimum Allowable Bridle Leg Lengths, L
1	43˚	3.25 ft. (0.99 m)	47°	3.50 ft (1.07 m)
2	43˚	3.25 ft. (0.99 m)	47˚	3.50 ft. (1.07 m)
3	43˚	3.25 ft. (0.99 m)	47˚	3.50 ft. (1.07 m)
4	43˚	3.25 ft. (0.99 m)	47˚	3.50 ft. (1.07 m)
5	43˚	3.25 ft. (0.99 m)	51˚	3.75 ft. (1.14 m)
6	47˚	3.50 ft. (1.07 m)	57˚	4.25 ft. (1.30 m)
7	51˚	3.75 ft. (1.14 m)	60˚	4.50 ft. (1.37 m)
8	55˚	4.00 ft. (1.22 m)	62˚	5.00 ft. (1.52 m)
9	57˚	4.25 ft. (1.30 m)	66˚	5.50 ft. (1.68 m)
10	60˚	4.50 ft. (1.37 m)	70˚	6.25 ft. (1.90 m)
11	62˚	5.00 ft. (1.52 m)	71˚	6.50 ft. (1.98 m)
12	64˚	5.25 ft. (1.60 m)	72˚	7.00 ft. (2.13 m)
13	66˚	5.50 ft. (1.68 m)	73˚	7.50 ft. (2.29 m)
14	67˚	5.75 ft. (1.75 m)	74˚	7.75 ft. (2.36 m)
15	68˚	6.25 ft. (1.91 m)	75˚	8.25 ft. (2.51 m)
16	71˚	6.50 ft. (1.98 m)	76˚	8.75 ft. (2.67 m)

CONFIGURATION E

The pickup configuration using the center pickup points on the MTG-3D is shown in Figure 38.

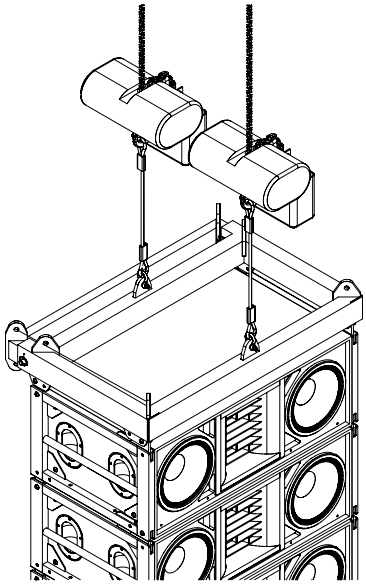

Figure 38. Using center pickup points

CAUTION: The MTG-3D Top Grid must not rotate (tilt) more than 12 degrees from horizontal.

Table 11. Suspended Weight and Quantity of M3D Loudspeakers

Bridle Leg Lengths	Angle Between Bridle and Grid α (deg)	Max Top Grid Angle	5:1 Safety Factor		7:1 Safety Factor	
			Maximum Allowable Suspended Weight	Maximum Allowable Qty. of M3Ds	Maximum Allowable Suspended Weight	Maximum Allowable Qty. of M3Ds
N/A	N/A	±12°	6404 lbs (2904.81 kg)	1 to 14	4574 lbs (2074.73 kg)	1 to 10

NOTE: Each motor must be rated to support the total weight of the entire array.

CONFIGURATION F

When an array is lifted with a separate motor attached to each of the MTG-3D corner lifting points, as shown in Figure 39, an array of up to 16 M3Ds can be supported (see Table 12).

Each motor hook may be attached to the corner of the MTG-3D Top Grid with two 5/8-inch or 3/4-inch shackles. There is a maximum combination of 16 M3D and M3D-Sub or other loudspeakers, such as MSL4s and CQs, which can be underhung in this configuration. The total weight of the hung system cannot exceed the total equivalent weight of 16 M3Ds.

NOTE: Each pair of motors must be rated to support the total weight of the entire array.

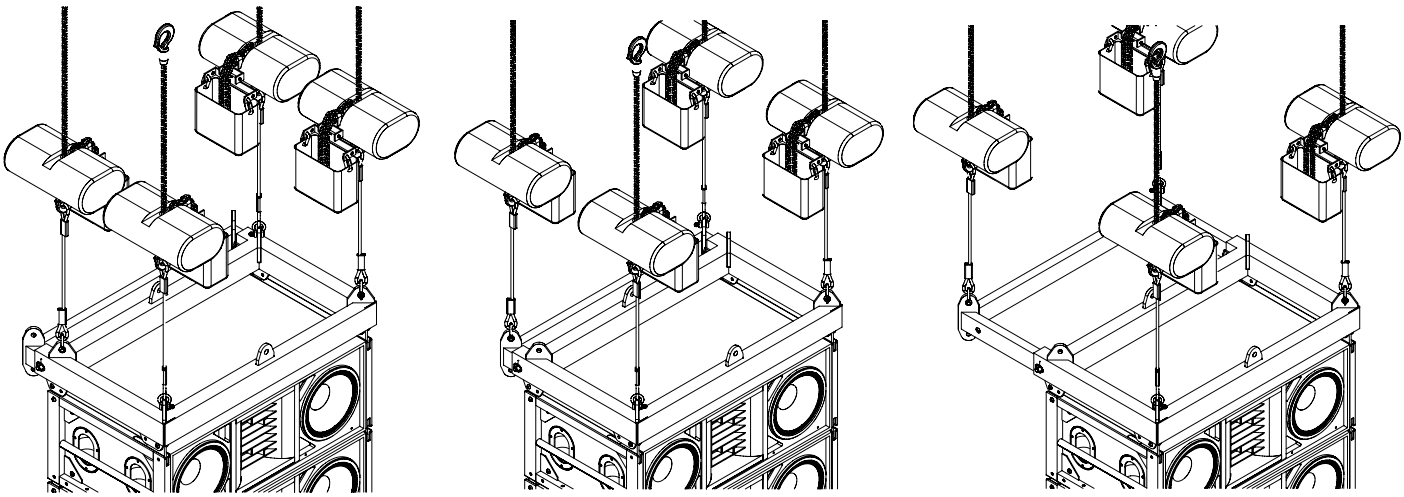

BRP 1 BRP 2 BRP 3

Figure 39. Separate motor configuration with the rear extension frame either retracted or extended

Table 12. Suspended Weight and Quantity of M3D Loudspeakers

Bridle Leg Lengths	Angle Between Bridle and Grid α (deg)	Max Top Grid Angle	5:1 Safety Factor		7:1 Safety Factor	
			Maximum Allowable Suspended Weight	Maximum Allowable Qty. of M3Ds	Maximum Allowable Suspended Weight	Maximum Allowable Qty. of M3Ds
N/A	N/A	±25°	7089 lbs (3215 kg)	1 to 16	7089 lbs (3215 kg)	1 to 16

CONFIGURATION G

In configuration G, the steel cables are connected to a single lift point from the four rigging points on the MTG-3D Top Grid.

The array is lifted from a single point attached to each of the MTG-3D Top Grid corner lifting points as shown in Figure 40. An array of up to 16 M3Ds can be supported.

The four-way bridle may be attached to each corner of the MTG-3D Top Grid with four 5/8-inch or four 3/4-inch shackles. The combined weight of the maximum combination of M3Ds and M3D-Subs or other loudspeakers, such as MSL-4s and CQs, which can be under-hung in this configuration, cannot exceed the total equivalent weight of the allowable number of M3Ds as shown in Table 13.

NOTE: The lift mechanism must be rated to support the total weight of the entire array.

The array must have suitable tie-downs to eliminate sway and twist.

CAUTION: DO NOT use the MTG-3D Top Grid in the extended position when an array is hung from a single point as shown in Figure 40.

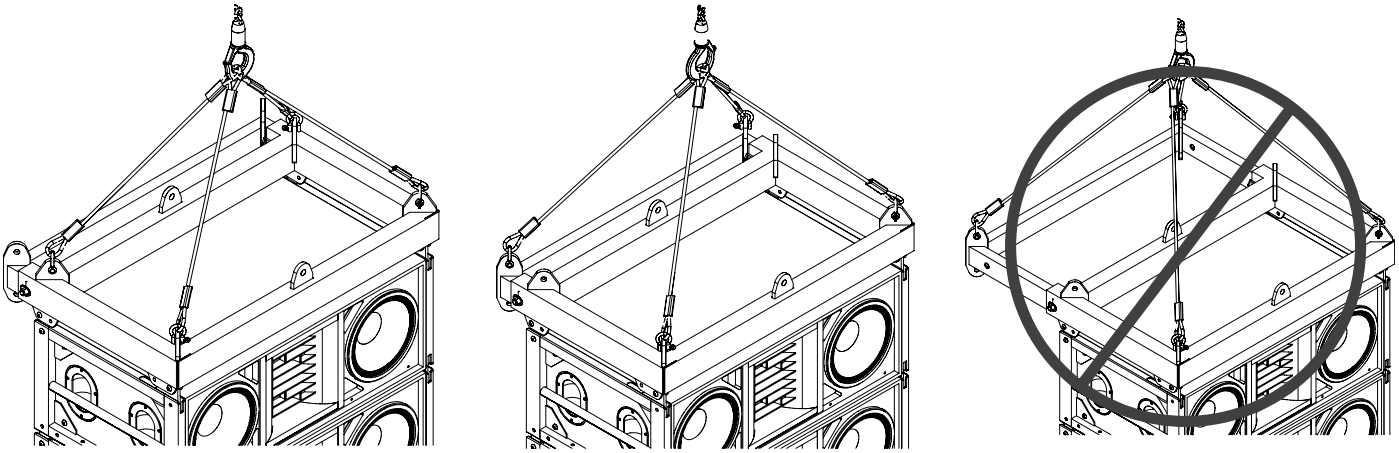

BRP 1 | BRP 2 | DO NOT use this hanging configuration (BRP 3)

Figure 40. Single point pickup configuration

Table 13. Suspended Weight and Quantity of M3D Loudspeakers

Bridle Leg Lengths	Angle Between Bridle and Grid α (deg)	Max Top Grid Angle	5:1 Safety Factor		7:1 Safety Factor	
			Maximum Allowable Suspended Weight	Maximum Allowable Qty. of M3Ds	Maximum Allowable Suspended Weight	Maximum Allowable Qty. of M3Ds
3.25 ft. (0.99 m)	43˚	±25˚	7089 lbs (3215 kg)	1 to 16	7089 lbs (3215 kg)	1 to 16

APPENDIX B — PHYSICAL SPECIFICATIONS

M3D PHYSICAL SPECIFICATIONS

Enclosure	Multi-ply hardwood
Finish	Black textured (weather protected)
	Note: Custom color available upon request
Protective grill	Powder-coated Hex stamped steel
Rigging	QuickFly MRF-3D rigging frame with integral CamLinks, rear connecting bars, and captive quick release pins
Weather protection	Standard
Dimensions	54" W x 20" H x 30.5" D (1372 mm x 508 mm x 775 mm)
Weight	Net: 415 lbs (188 kg)

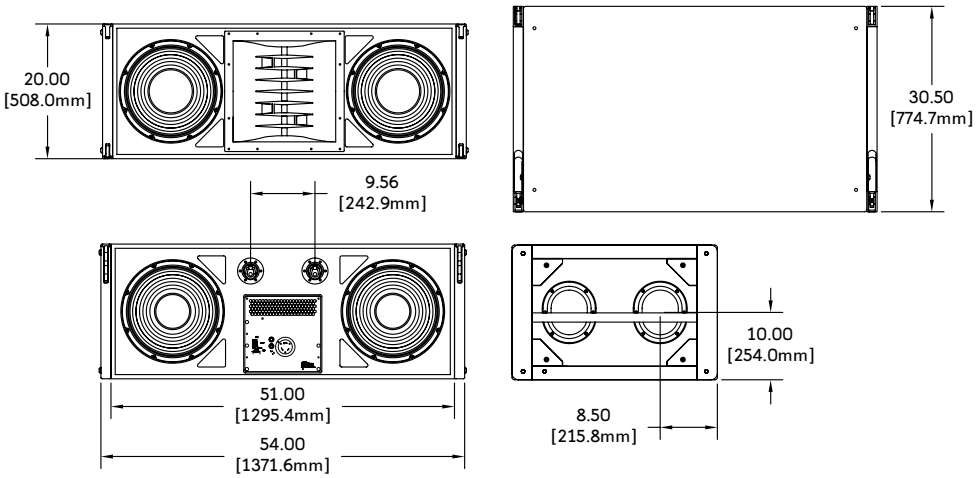

Figure 41. M3D Loudspeaker physical dimensions

M3D-SUB PHYSICAL SPECIFICATIONS

Enclosure	Multi-ply hardwood
Finish	Black textured (weather protected)
	Note: Custom color available upon request
Protective grill	Powder-coated Hex stamped steel
Rigging	QuickFly MRF-3D rigging frame with integral CamLinks, rear connecting bars, and captive quick release pins
Weather protection	Standard
Dimensions	54" W x 20" H x 30.5" D (1372 mm x 508 mm x 775 mm)
Weight	Net: 395 lbs (179 kg)

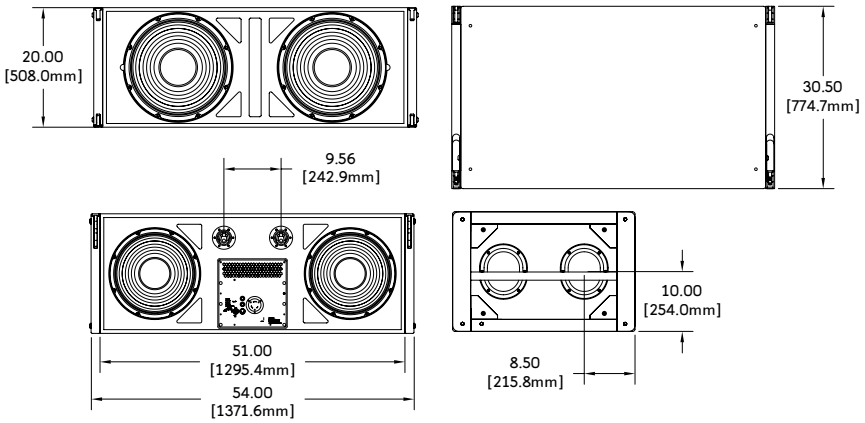

Figure 42. M3D-Sub Directional Subwoofer physical dimensions

MTG-3D TOP GRID PHYSICAL SPECIFICATIONS

Finish	Black powder coated
Dimensions	Width: 55.60" (1412 mm)
	Height: 14.54" (369 mm)
	Depth with extension in extended position: 50.70 in (1288 mm)
	Depth with extension in closed position: 37.43 in (951 mm)
Weight	308 lbs (139.71 kg)

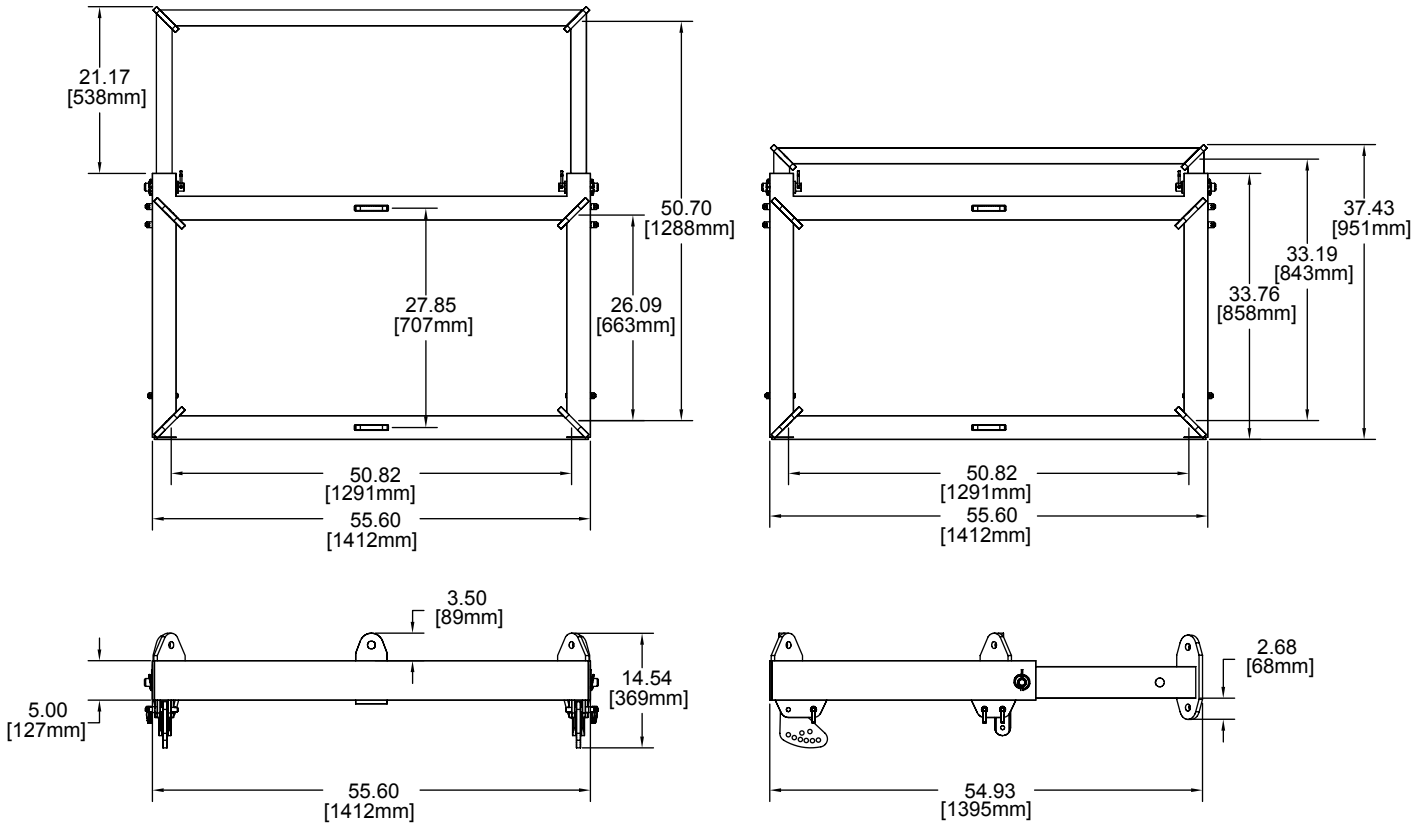

Figure 43. MTG-3D Top Grid physical dimensions

APPENDIX C — MTF-3D TRANSITION FRAME ASSEMBLY PROCEDURE

Use the following procedure when transitioning in an array from M3D or M3D-Sub loudspeakers to Meyer Sound MSL-4s or CQs (see Figure 44).



Figure 44. Transition frame with downfill loudspeakers

TRANSITION FRAME KIT

Each transition frame kit contains the items shown in Table 14.

Table 14. Transition Frame Kit

Qty	Description	Part Number
1	Front arm[1]	61.105.113.01
1	Rear arm[2]	61.105.114.01
2	Adjustable link front link assembly[3]	61.105.125.01
2	Adjustable link rear link assembly[4]	61.105.115.01
4	2.5-inch quick release pin (QRP)[5]	134.007
9	Oval handle hitch pin[6]	134.014
9	Lynch pin[7]	124.060

Table Footnotes

1. The front arm is the larger arm
2. The rear arm is the smaller arm
3. The adjustable link front link assemblies include a long link plate, hammer-lok, and chain.
4. The adjustable link rear link assemblies include a short link plate, hammer-lok, and chain.
5. The 2.5-inch QRPs are used for holding the chain to the transition frame.
6. Oval handle hitch pins are used for holding the loudspeakers to the transition frame.
7. The lynch pins are used with the oval handle hitch pins.

ATTACHING LOUDSPEAKERS TO TRANSITION FRAME

This procedure can be completed with two stagehands, but is most efficient with three.

1. Position loudspeakers at their approximate desired horizontal splay angle.
2. Prop up all rings and stud rigging rings to their upright position and parallel with the corresponding frame holes.
3. Place the rear arm across the top of the loudspeakers — on the inside of the rigging points — flanges up. Note the appropriate slots in the rear arm for the loudspeakers and the desired splay angle:

   — Rectangles denote MSL-4s

   — Circles denote CQs.

The number inside of the shapes denotes the horizontal splay angle.

4. Position the rear arm over the rigging rings so that the rings slide up through the slots. Some repositioning may be necessary to align the rigging rings and slots.
5. Slide the oval handle hitch pins from the rear, across the top of the rear arm and through the rigging rings (and vertical rib or the arm itself) until the hitch pin collar stops against the side of the rear arm.
6. Insert a lynch pin into the hole in the oval handle hitch pin. This will lock the pin into place so that it cannot be removed.
7. Follow the same steps (steps 1 through 6 above) to attach the front arm.

TIP: When you are lowering the front arm on to the rings, it is easiest to do so from one side — gradually lowering it to the other side as the rings each fit into the corresponding holes in the arm. Once the first ring is positioned into the first slot, insert the hitch pin to anchor the front arm. This will simplify the insertion of the other five hitch pins. The hitch pins should be inserted from the rear of the cabinet toward the front, as with the rear arm.

ATTACHING THE ADJUSTABLE LINK ASSEMBLY TO THE M3D MRF-3D RIGGING FRAMES

Rear

1. Slide the rear (short) adjustable link plate up (vertically) inside the rear tube of the MRF-3D rigging frame.
2. Align the lowest hole in the adjustable link plate with the lower hole in the MRF-3D rigging frame. Each hole in the adjustable link corresponds with two degrees of vertical splay angle.
3. Slide the QRP through the lower hole, through the adjustable link plate, and then through the hole on the other side (see Figure 45). Make sure the QRP is seated all the way in and locked into place.

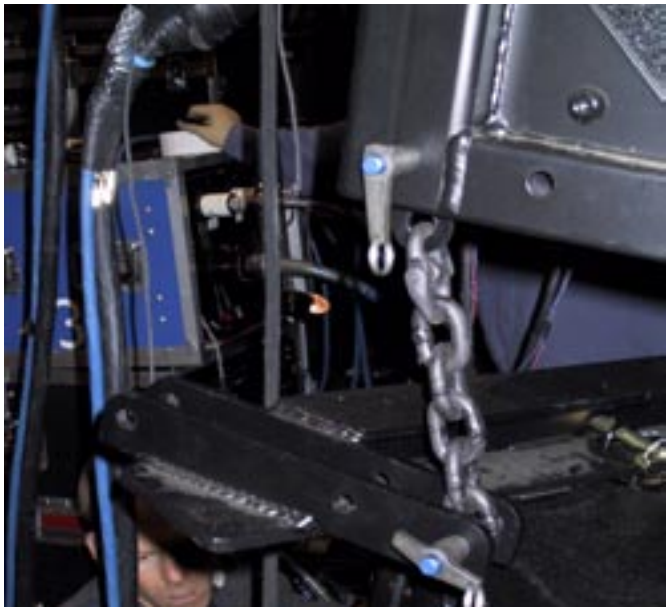

Figure 45. Pinning rear adjustable link plate

4. Lower the M3D array over the CQ assembly transition frame and leave approximately 1 inch (25 mm) of clearance between the bottom edge of the lowest M3D and the front arm of the transition frame.
5. Release the QRP in the top of the rear adjustable link, allowing the bottom of the chain assembly to align as follows:

   — For 30˚ splay MSL-4s - The front-most hole in the rear Transition Frame arm

   — For 22.5˚ splay MSL-4s – The next to front-most hole in the rear Transition Frame arm

   — For CQs - The rear-most hole in the rear Transition Frame arm

Slide the QRP through the transition frame hole selected in step 5, the lowest chain link, and then through the transition frame hole on the other side. Make sure the pin is seated all the way in and locked into place.

Repin the top of the rear adjustable link in the highest hole possible without lifting the rear of the MSL-4 cabinets. For most applications, this will be the 2˚ hole.

Front

1. Raise the M3D array to give sufficient space to slide the front (long) adjustable link plate up (vertically) in between the MRF-3D rigging frame and the CamLink, and use the same hole that is used to adjust the CamLink (see Figure 46).



Figure 46. Pinning front adjustable link plate

2. Remove the QRP holding the CamLink in place. The CamLink should swing down freely.
3. Slide the adjustable link plate up between the CamLink and MRF-3D rigging frame, aligning the weldment hole with the appropriate hole in the adjustable link plate. The setting should result in a net (relative to the bottom M3D) downtilt of 5˚ (i.e., if the rear hole is pinned at 2˚, then the front hole will be pinned at 7˚).
4. Insert the QRP through the MRF-3D rigging frame hole just far enough in to temporarily hold the adjustable link plate in place.
5. Rotate the CamLink back up again, and then fully insert the QRP through the CamLink and through the opposite side of the MRF-3D rigging frame. Make sure the pin is seated all the way in and locked into place.
6. Place the bottom link of the chain in between the two vertical flanges on the front arm.
7. Align the link with the holes in the flanges and insert a QRP through one flange, through the link, and through the other flange. Make sure the pin is seated all the way in and locked into place.

GLOSSARY

A

array — A group of flown loudspeakers that has been configured to produce optimum sound pressure level (SPL) and coverage in a particular venue.

B

block — A group of loudspeakers from an array that has been broken down into convenient-sized groups for transport.

bridle — A method of using two steel cables connected to two lifting points on an array's top grid, brought together to a common point and attached to a lifting motor.

bridle leg — One side of a bridle.

BRP — Back rigging point. This is a back pickup point on the MTG-3D Top Grid to which a bridle leg is attached.

C

CamLink — A Meyer Sound feature that allows quick, positive, and accurate setting of splay angles in an array.

chain bag or bucket — A place where the chain from lift motors is stored as the chain moves through the lift motor.

D

dead hang — A lifting configuration where the lifting motors are connected directly to the lifting points on the MTD-3D Top Grid without the use of a bridle.

dynamic load — The changing weight of an array when the rigging motors are in motion, which includes the static weight and other factors such as acceleration, bounce, and startup forces.

F

fly — The process of lifting an array into position in a venue.

FOH — Front-of-house

front-to-back — A lifting configuration where the lifting motors are attached to bridles connected to the front lifting and rear lifting points on the MTD-3D Top Grid.

I

in or incoming — Rigging term used to denote hardware moving in a downward direction.

L

laser level — A device used by audio technicians to determine an array's site angle during setup or at final trim position. It also has readout illumination and can be set to relative angles.

lift point — That point on an array that has been designed and certified to fly an approved array configuration with the appropriate safety factor (see rigging point).

O

out	Rigging term denoting hardware moving in an upward direction.

P

pullback or pullback motor	Rigging term used to describe the process of attaching rope, a sling, or a pullback motor to the bottom rear of an array to achieve further downtilt than is available using the array's center of gravity alone.

Q

QRP	Quick Release Pin, 0.5" x 2." (13 mm x 64 mm), used in all M3D rigging points.

R

rigging point	Sometimes referred to as a lift point. This is the point on an array's MTG-3D Top Grid where a lifting motor can be connected. These points have been designed and certified to lift an approved array configuration. Rigging point is also used to refer to the position in the venue where a motor will be suspended from the venue structural steel.

S

SPL	Sound pressure level. This is a measurement of the sound energy measured at a specific location in a venue.
splay	The angle between the bottom of a loudspeaker in an array and the top of the next loudspeaker in the array.
static load	A rigging term that describes the actual weight of an array when it is not in motion

T

top grid	A Meyer Sound MTG-3D Top Grid is a rigging element that provides a certified means of transitioning between lifting motors to the top loudspeaker of an array.
transition frame	A Meyer Sound rigging element that provides a certified means of transitioning between different Meyer Sound loudspeaker types within an array.
trim	Also referred to as trimmed position or trim height to mean the final position of the array after setup.



Meyer Sound Laboratories, Inc.
2832 San Pablo Avenue
Berkeley, CA 94702

www.meyersound.com
T: +1 510 486.1166
F: +1 510 486.8356

® 2003
Meyer Sound Laboratories, Inc.
All Rights Reserved

05.105.400.01 B
Date: 01.03.03