List of Contents:			
	Qty	**Part Number**	**Description**
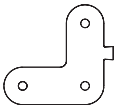	2	61.112.023.01	M2D Front L-Link
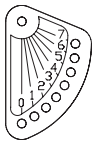	2	61.112.021.01	M2D Rear CamLink
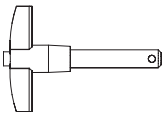	10	134.018	5/16" x 1.25" Quick Release Pin (QRP)

Install the M2D rear CamLink with one 5/16” x 1.25” QRP as shown. The numbers on the CamLink are used to secure it to another M2D cabinet or M2D-Sub with the desired degree of splay.

Install the M2D front L-link, tab facing forward, with two 5/16” x 1.25” QRP as shown.

NOTE: To store the M2D front L-link, rotate the L-link 90° counter-clockwise (with the tab pointing up) and secure the link’s two holes to the two front cabinet holes with two 5/16” x 1.25” QRPs.

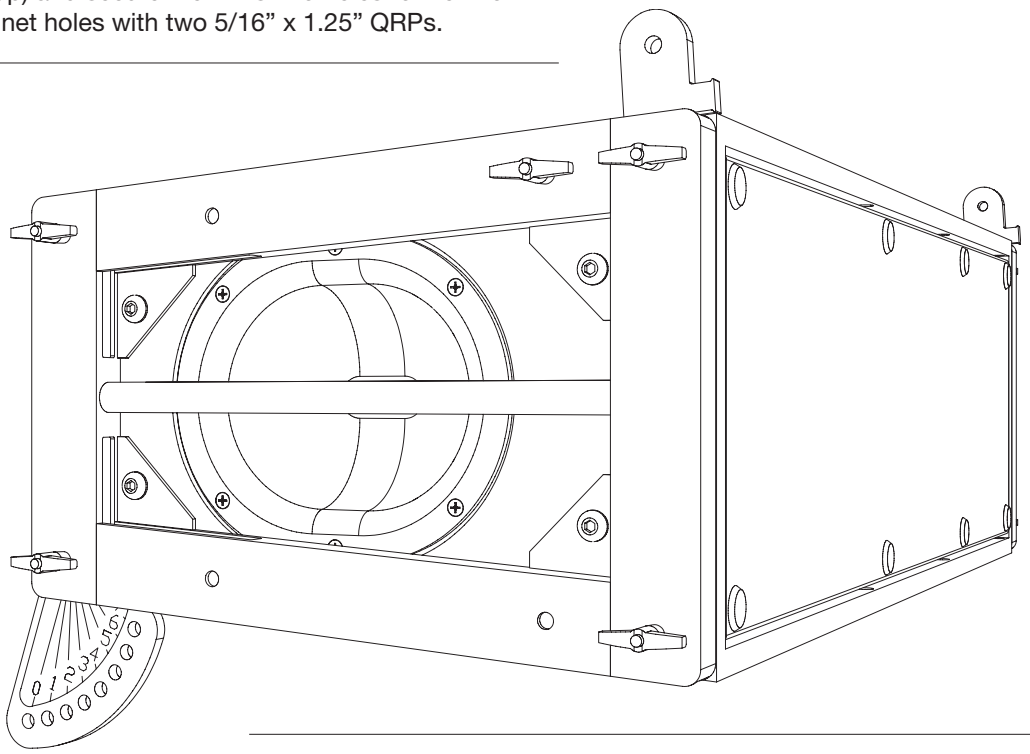

NOTE: To store the M2D rear CamLink, rotate the CamLink counter-clockwise 90°, securing the rear single hole and the rear 0° hole to the two rear cabinet holes with two 5/16” x 1.25” QRPs.

Meyer Sound Laboratories Inc.
2832 San Pablo Avenue
Berkeley, CA 94702
www.meyersound.com
T: +1 510 486.1166
F: +1 510 486.8356
© 2003
Meyer Sound Laboratories Inc.
All Rights Reserved
PN: 18.112.024.01
Rev: C