ASSEMBLY GUIDE

MTG-LYON Top Grid and Accessories

thinking sound Meyer Sound

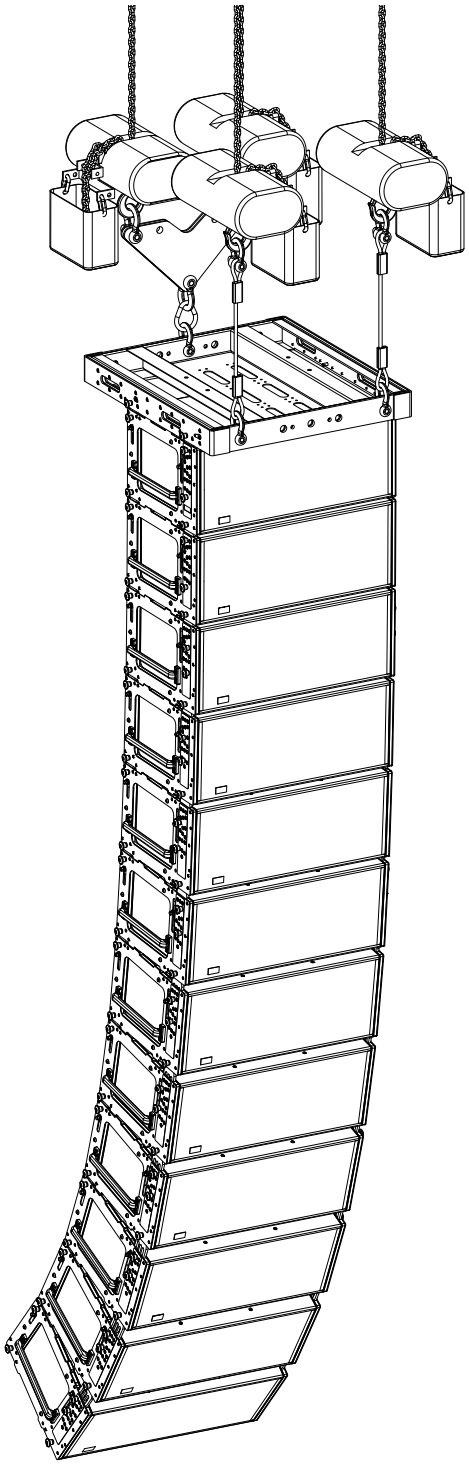

Keep these important operating instructions.
Check www.meyersound.com for updates.

© 2014
Meyer Sound. All rights reserved.
MTG-LYON Top Grid and Accessories Assembly Guide, PN 05.232.097.01 A

The contents of this manual are furnished for informational purposes only, are subject to change without notice, and should not be construed as a commitment by Meyer Sound Laboratories Inc. Meyer Sound assumes no responsibility or liability for any errors or inaccuracies that may appear in this manual. Except as permitted by applicable copyright law, no part of this publication may be reproduced, stored in a retrieval system, or transmitted, in any form or by any means, electronic, mechanical, recording or otherwise, without prior written permission from Meyer Sound.

GuideALink, LYON, and all alpha-numeric designations for Meyer Sound products and accessories are trademarks of Meyer Sound. MAPP Online XT, Meyer Sound, the Meyer Sound wave logo, MICA, and QuickFly are registered trademarks of Meyer Sound Laboratories Inc. (Reg. U.S. Pat. & Tm. Off.). All third-party trademarks mentioned herein are the property of their respective trademark holders.

CONTENTS

Chapter 1: Introduction 5

How to Use This Assembly Guide 5
Safety Statement for QuickFly Rigging 5
LYON Rigging Options 8

Chapter 2: LYON GuideALinks 9

LYON GuideALinks 9
GuideALink Configurations 12
When to Move the Locking Pins to the “Stow Pin” Position 15

Chapter 3: MTG-LYON Top Grid 17

MTG-LYON Top Grid Kit Contents 18
MTG-LYON Top Grid Dimensions 18
MTG-LYON Top Grid Load Ratings 19
Additional Requirements for MTG-LYON Top Grid Load Ratings 19

Chapter 4: Flying LYON Arrays 21

MTG-LYON Top Grid Orientation 21
Attaching the Array to the MTG-LYON 22
MTG-LYON Pickup Configurations 23

Chapter 5: MVP Motor Vee Plate 27

MVP Motor Vee Plate Kit Contents 28
MVP Motor Vee Plate Load Ratings 28

Chapter 6: PBF-LYON Pull-Back Frame 29

PBF-LYON Pull-Back Frame Kit Contents 30
PBF-LYON Pull-Back Frame Dimensions 30
PBF-LYON Pull-Back Frame Load Ratings 30

Chapter 7: RPP-LEO-M Rear Pull-Up Plate 31

RPP-LEO-M Rear Pull-Up Plate Kit Contents 32
RPP-LEO-M Rear Pull-Up Plate Load Ratings 32

Chapter 8: MCF-LYON Caster Frame 33

MCF-LYON Caster Frame Dimensions 35
MCF-LYON Truck Packing Examples 35
Safety Guidelines for the MCF-LYON Caster Frame 36

Appendix A: Assembling Arrays with the MTG-LYON Top Grid 37

Appendix B: Laser Bracket 39

Appendix C: Declaration of Conformity 41

CHAPTER 1: INTRODUCTION

HOW TO USE THIS ASSEMBLY GUIDE

Make sure to read this assembly guide in its entirety before configuring a loudspeaker system with LYONs. In particular, pay close attention to material related to safety issues.

As you read this assembly guide, you will encounter the following icons for notes, tips, and cautions:

NOTE: A note identifies an important or useful piece of information relating to the topic under discussion.

TIP: A tip offers a helpful tip relevant to the topic at hand.

CAUTION: A caution gives notice that an action may have serious consequences and could cause harm to equipment or personnel, or could cause delays or other problems.

Information and specifications are subject to change. Updates and supplementary information are available at www.meyersound.com.

Meyer Sound Technical Support is available at:

- **Tel:** +1 510 486.1166
- **Tel:** +1 510 486.0657 (after hours support)
- **Web:** www.meyersound.com/support
- **Email:** techsupport@meyersound.com

SAFETY STATEMENT FOR QUICKFLY RIGGING

Please read this Statement carefully and in its entirety. It contains important information regarding safety issues, including guidelines for general safe use of rigging systems as well as advisories on government regulations and liability laws.

This Statement assumes that the owners and/or users of a QuickFly® system are knowledgeable and experienced in the areas of rigging and flying loudspeaker systems. Many issues of crucial concern, such as the determination of appropriateness and condition of venue rigging points, cannot be addressed here. Therefore, the user must assume all responsibility for the appropriate use of QuickFly systems in any particular location or circumstance.

The suspension of large, heavy objects in public places is subject to numerous laws and regulations at the national/federal, state/provincial, and local levels. The user must assume responsibility for making sure that use of any QuickFly system and its components in any particular circumstance or venue conforms to all applicable laws and regulations in force at the time.

Load Ratings and Specifications

Long-term safe operation is a central concern in the design and manufacture of any rigging/flying system. Meyer Sound has taken great care in material selection and component design. In all critical cases, load points are redundant, with a safety margin that allows one or more load points to fail while maintaining system integrity. After manufacture, all load-critical system components are individually inspected.

All load ratings and other specifications given in this manual are the result of accepted engineering practice and careful testing. However, such specifications and ratings are subject to change. Users are advised to check the QuickFly section of the Meyer Sound website at

www.meyersound.com

or contact Technical Support at regular intervals to check for updated or revised information.

Regulatory Compliance

The design and safe working load (SWL) ratings of the QuickFly system are intended to be in compliance with all known regulatory statutes currently applicable in the United States. Unless otherwise specified, all working loads are based on a 7:1 safety factor. However, as noted above, there are wide variations internationally in the regulations and practices applying to suspension of sound systems in public places. Although regulations in the United States are generally among the most stringent, safety codes may be even stricter in a few localities (such as those highly prone to earthquakes). In addition, applicable safety codes are open to interpretation: Government officials in one location may have a stricter interpretation than another local official, even when operating under the same regulations and in the same legal jurisdiction.

Consequently, users of QuickFly rigging systems should be prepared to take additional safety assurance measures beyond those outlined in this Statement. IN ALL CASES, IT IS THE RESPONSIBILITY OF THE USER TO MAKE CERTAIN THAT ANY MEYER SOUND LOUDSPEAKER SYSTEM IS SUSPENDED IN ACCORDANCE WITH ALL APPLICABLE NATIONAL/FEDERAL, STATE/PROVINCIAL, AND LOCAL REGULATIONS.

Safety Responsibilities “Above the Hook”

In most touring applications of rigging systems, the touring sound provider is normally responsible for ensuring the safety of the suspension system only below the attachment point. The safety and suitability of the attachment point is generally seen as the responsibility of the venue owner or operator. However, this distinction (“above the hook” versus “below the hook”) can be open to interpretation. Touring system operators should double-check to make certain that attachment points are approved and suitably load rated, and that the points used are those identified as such by the venue owner or operator. As an extra precaution, careful inspection of the attachment points is advised before flying, particularly in older venues or those hosting frequent events using large sound and lighting systems. IN ANY CASE, MEYER SOUND QUICKFLY SYSTEMS ARE INTENDED ONLY FOR SUSPENSION FROM APPROVED RIGGING POINTS, EACH KNOWN TO HAVE AMPLE SWL MARGINS FOR THE SYSTEM COMPONENTS SUSPENDED BELOW THEM.

Inspection and Maintenance

The Meyer Sound QuickFly systems are an assembly of mechanical devices, and are therefore subject to wear and tear over prolonged use, as well as damage from corrosive agents, extreme impact, or inappropriate use.

BECAUSE OF THE SAFETY ISSUES INVOLVED, USERS MUST ADOPT AND ADHERE TO A SCHEDULE OF REGULAR INSPECTION AND MAINTENANCE. IN TOURING APPLICATIONS, KEY COMPONENTS MUST BE INSPECTED BEFORE EACH USE. Such inspection includes examination of all load-bearing components for any sign of undue wear, twisting, buckling, cracking, rusting, or other corrosion. In regard to rust and corrosion, the main components of a QuickFly system are either protected by an exterior coating or made from stainless steel, which is impervious to rust and resistant to most corrosive fluids. Nevertheless, normal use and shipping vibrations can wear through the protective coatings, and extremely corrosive fluids (such as battery acid) can cause severe damage with prolonged exposure even to protected parts. Particular attention should be given to screws, bolts, and other fasteners to make certain the fittings are tight and secure. Metal seams and welds should be examined for any sign of separation or deformation. Meyer Sound strongly recommends that written documentation be maintained on each QuickFly system, noting date of inspection, name of inspector, points of system checked, and any anomalies discovered.

Annual Comprehensive Examination and Test Program

In addition to routine checks on the road for touring systems, Meyer Sound also recommends a careful, comprehensive system examination and testing “at home” in the warehouse or other appropriate location at regular intervals. Such at home examinations and tests should occur at least once a year, and should include a careful inspection of each component under ideal lighting conditions, and then a final comprehensive check of the entire system after it has been flown.

If any anomalies or defects are discovered that could possibly affect the safety or integrity of the system, affected parts or subsystems should be replaced in their entirety before that part of the system is flown again.

Replacement Parts

Any component found to be defective, or any safety-related component you even suspect might be defective, should be replaced with the equivalent, approved part. Parts specific to a QuickFly system should be ordered directly from Meyer Sound. No attempt should be made to substitute what appears to be equivalent or “mostly the same” generic replacements. Some parts used in QuickFly systems are identical to those used in other rigging applications. To the best of our knowledge, most of these suppliers are reputable and their products are reliable. However, Meyer Sound has no way of assuring the quality of products made by these various suppliers. Therefore, Meyer Sound is not responsible for problems caused by components that were not supplied by Meyer Sound.

Training

QuickFly systems are relatively straightforward and easy to use. However, they should only be used by persons trained in the use of loudspeaker rigging systems, who have mastered key points of assembly, rigging and flying.

LYON RIGGING OPTIONS

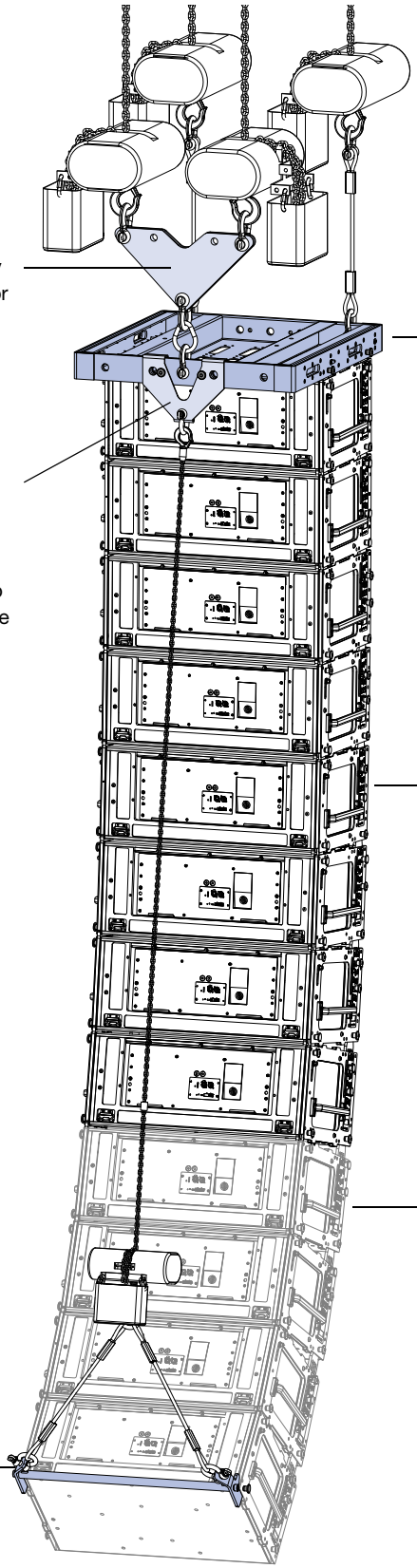

MVP Motor Vee Plate Assembly
Attaches two motors to the rear or front center pickup point of the MTG-LYON top grid, to fine tune the horizontal aim of the array ±21 degrees.

RPP-LEO-M Rear Pull-Up Plate
The optional pull-up plate helps assemble large flown arrays with wide splay angles. Flown arrays can be pulled up (with a motor) to expand its splay angles so the blue locking pins can be more easily inserted.

PBF-LYON Pull-Back Frame
The optional pull-back frame attaches to the bottom cabinet in the array and provides pull-back for extreme array downtilt. The pull-back frame can also be used for pull-up to expand the array's splay angles during installation so the blue locking pins can be more easily inserted.

MTG-LYON Top Grid
With some restrictions, flies up to 22 LYONs at a 5:1 safety factor, or up to 18 LYONs at a 7:1 safety factor. The grid accommodates a variety of pickup configurations with six pickup points, three each on the front and rear of the grid

LYON-Ms
Array components for primary coverage

LYON-Ws
Array components for wide coverage

CHAPTER 2: LYON GUIDEALINKS

LYON GUIDEALINKS

LYON is equipped with four captive GuideALinks that link to adjacent units in flown arrays. Located at the top corners of the cabinet, the GuideALinks extend up and into the link slots of the cabinet above it (or into the link slots of the MTG-LYON top grid). The links extend and retract with recessed knobs and are secured with quick-release pins. Cabinets can be easily linked once they are stacked, since the GuideALinks extend up and into the link slots of the cabinet above. Each LYON loudspeaker ships with 10 7/16 x 0.90-inch quick-release pins (black button) (PN 134.050).

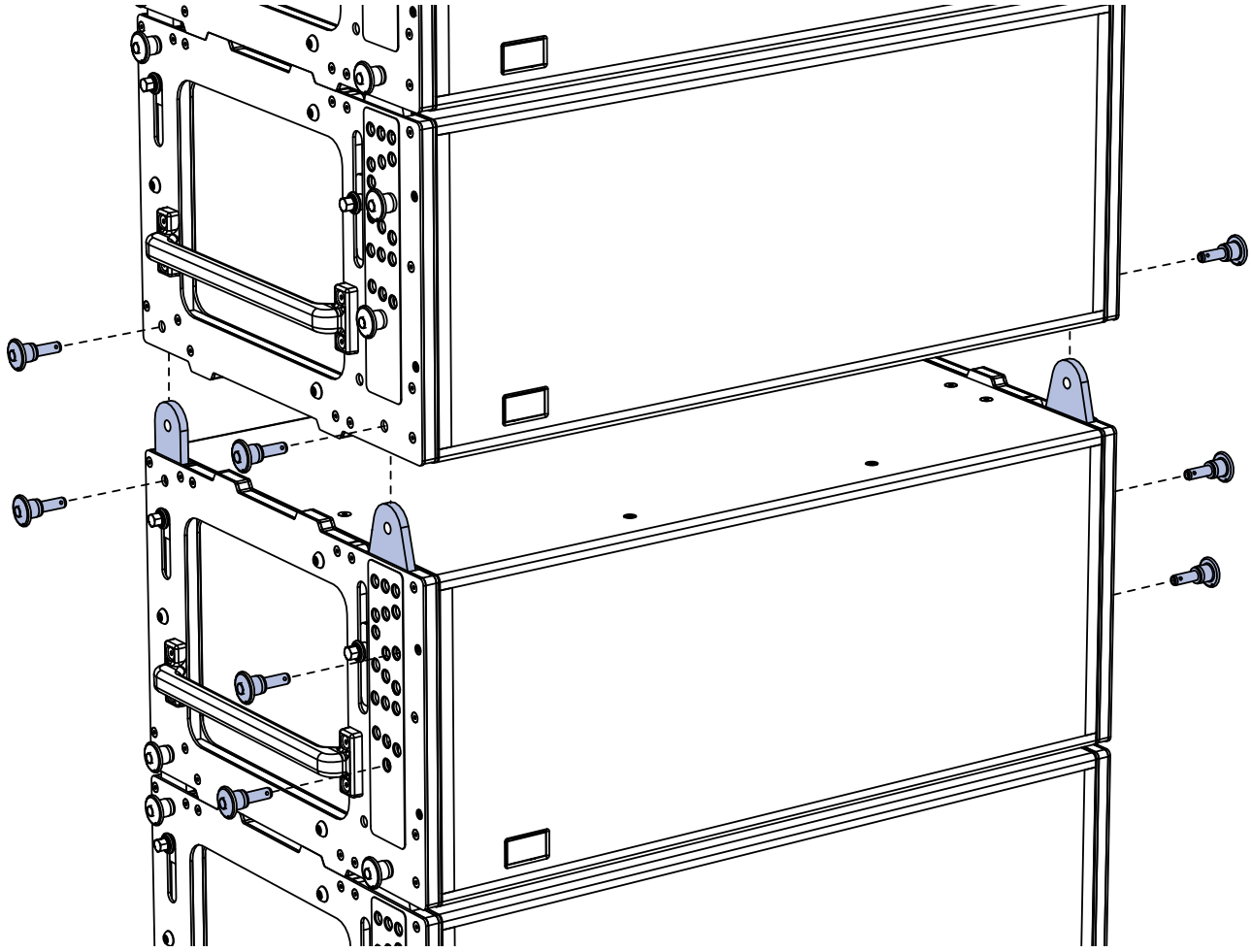

LYON GuideALinks with Quick-Release Pins

⚠ **CAUTION:** LYON GuideALinks must be secured with the included quick-release pins. At no time should the weight of the loudspeaker rest on the GuideALink knobs when the links are fully extended (without the pins inserted). GuideALink knobs are for extending and retracting the links only.

Rear GuideALinks

The rear GuideALinks attach at a fixed splay angle of 0 degrees and act as a pivot point between linked LYONs, with the splay angle between the units determined by the front GuideALink positions. The rear GuideALinks can be pinned in either of two positions: extended or stowed.

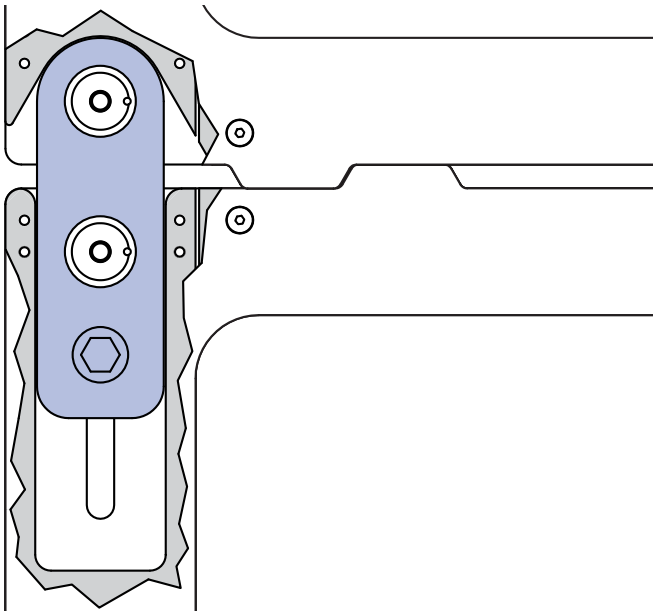

LYON Rear GuideALink Extended and Pinned

CAUTION: LYON GuideALinks must be secured with the included quick-release pins. At no time should the weight of the loudspeaker rest on the GuideALink knobs when the links are fully extended (without the pins inserted). GuideALink knobs are for extending and retracting the links only.

Front GuideALinks

The front GuideALinks determine the loudspeaker's splay angle and are configured with the yellow ANGLE positions when the cabinets are resting in caster frames. After the stack is lifted with the motors, the loudspeakers rotate on the axis of the rear GuideALinks and the front GuideALinks slide into position as the weight of the loudspeakers causes the cabinets to shift, at which point, quick-release pins are inserted in the corresponding blue LOCKING positions to lock the splay angles.

Available splay angles for linked LYONs include 0.0, 0.5, 1.0, 1.5, 2.0, 3.0, 4.0, 5.0, 7.0, and 9.0 degrees and are indicated by the blue and yellow GuideALink labels.

NOTE: The splay angles listed on the GuideALink label are for relative angles between the center axes of the linked units. For example, setting the GuideALink to 5 degrees yields a 5-degree downtilt of the lower unit to the upper unit. How the loudspeakers relate to the floor, stage, and seating angles in the venue depends on the orientation of the MTG-LYON top grid, the angles of the loudspeakers in the array above them, and other factors. MAPP Online XT should be used to calculate optimum splay angles for loudspeakers and to predict coverage patterns for arrays.

NOTE: Optimal acoustical performance for LYON arrays is achieved by using the appropriate number of units and appropriate splay angles to meet the coverage requirements of the venue. You should use MAPP Online XT to calculate optimum splay angles for loudspeakers and to predict coverage patterns for arrays.

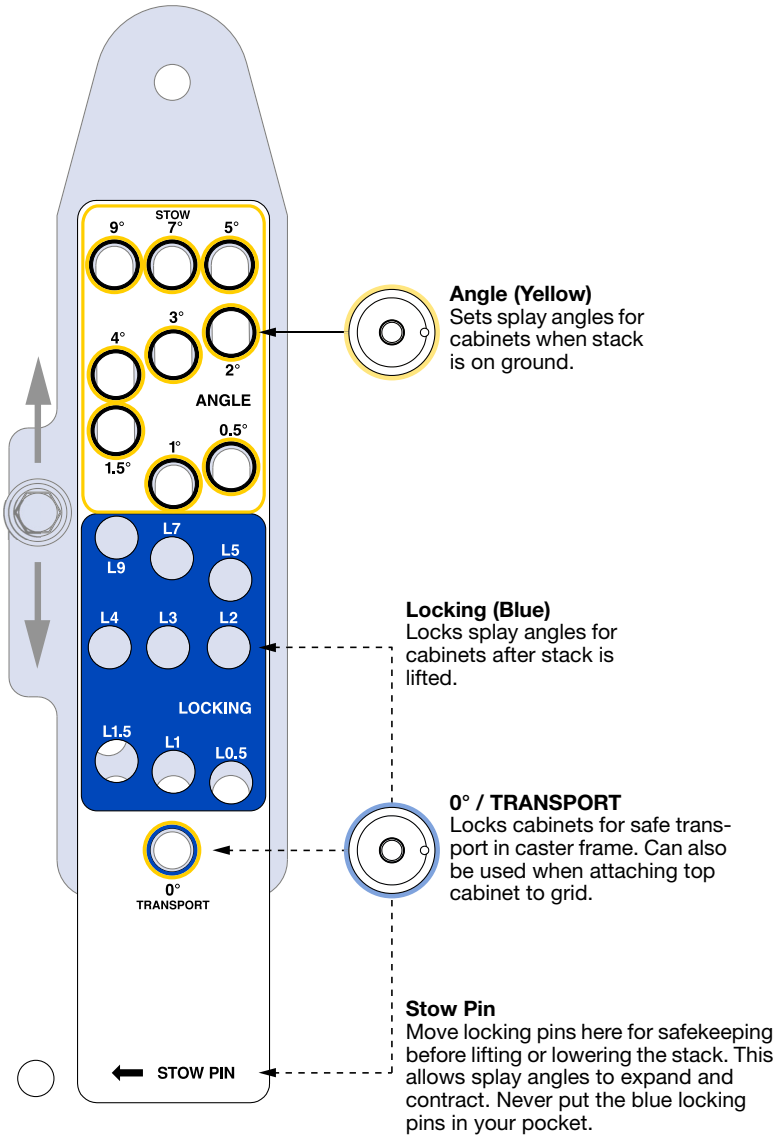

LYON Front GuideALink Label with Angle and Locking Pins

⚠ **CAUTION:** LYON GuideALinks must be secured with the included quick-release pins. At no time should the weight of the loudspeaker rest on the GuideALink knobs when the links are fully extended (without the pins inserted). GuideALink knobs are for extending and retracting the links only.

GUIDEALINK CONFIGURATIONS

The following sections document how to configure LYON GuideALinks.

Configuring GuideALinks for 0 Degrees

When configuring GuideALinks for 0 degrees, both the yellow ANGLE and blue LOCKING positions are pinned before lifting the stack. This procedure differs from the one described in “Configuring GuideALinks for 0.5, 1.0, 1.5, 2.0, 3.0, 4.0, 5.0, 7.0, and 9.0 Degrees” on page 13.

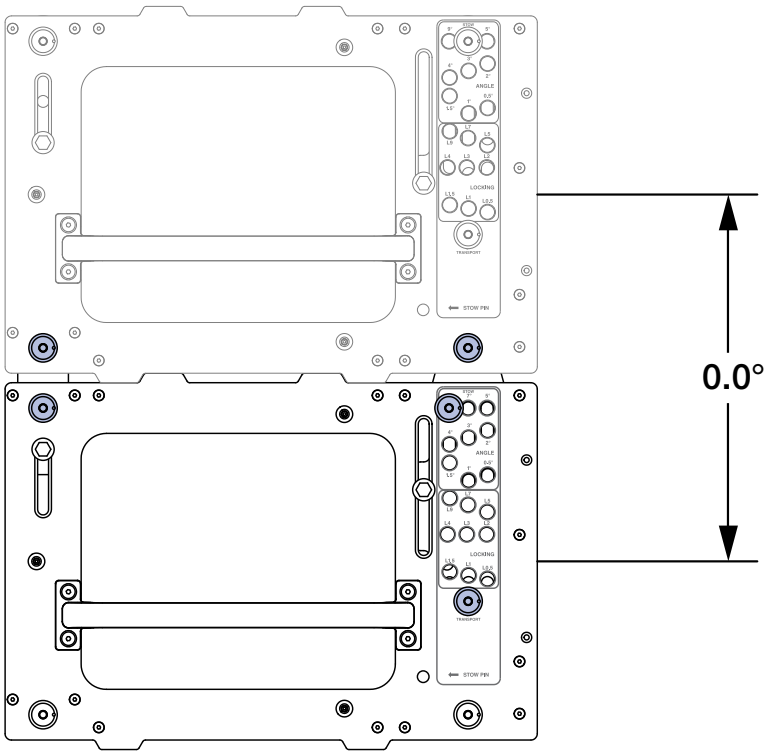

LYON Cabinet (Bottom) Configured for 0-Degree Splay Angle

To configure GuideALinks for a splay angle of 0 degrees:

1. Pin the rear and front GuideALinks to the cabinet above.
2. Insert quick-release pins in any of the yellow ANGLE positions. For a splay angle of 0 degrees, it does not matter which ANGLE position is chosen.
3. Before lifting the stack, insert quick-release pins in the TRANSPORT / 0-degree position (just below the blue LOCKING positions).

⚠ **CAUTION:** Splay angles of 0 degrees should only be used for the top cabinet attached to the grid. Splay angles of at least 0.5 degrees are recommended for cabinets near the top of the array. If multiple cabinets are set to 0 degrees and the array is flown with downtilt, the resulting splay angles could be negative because of the gaps in the links and pins that facilitate easy pinning.

⚠ **CAUTION:** When LYONs are stacked in the MCF-LYON caster frame, each of the cabinets should be set to splay angles of 0 degrees, except for the top cabinet, which should be configured as stowed. For more information, see “Configuring GuideALinks for Transport” on page 14.

Configuring GuideALinks for 0.5, 1.0, 1.5, 2.0, 3.0, 4.0, 5.0, 7.0, and 9.0 Degrees

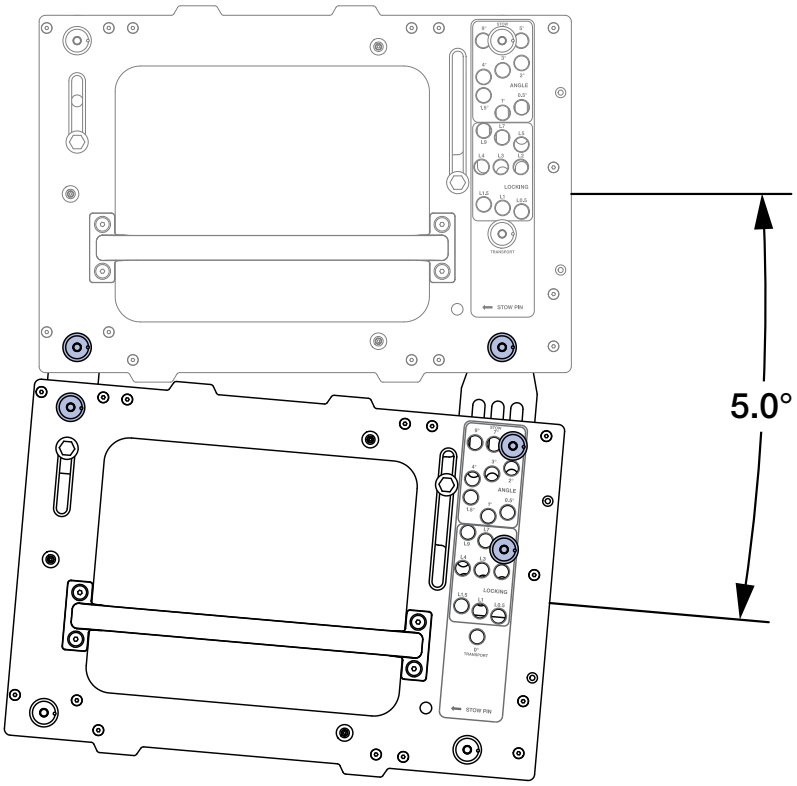

LYON Cabinet (Bottom) Configured for 5-Degree Splay Angle

To configure GuideALinks for splay angles of 0.5, 1.0, 1.5, 2.0, 3.0, 4.0, 5.0, 7.0, or 9.0 degrees:

1. Pin the rear and front GuideALinks to the cabinet above.
2. Insert quick-release pins in the desired yellow ANGLE position. For example, for a splay angle of 5 degrees, insert quick-release pins in the yellow 5-degree ANGLE position.
3. Before lifting the stack, remove the quick-release pins from the blue LOCKING positions and insert them temporarily in the STOW PIN position. This will allow splay angles to extend when the stack is lifted.
4. After the stack has been attached to the array and lifted with the motors, to lock the splay angles, remove the pins from the STOW PIN position and insert them in the corresponding blue LOCKING positions. For example, to lock the splay angles at 5 degrees, insert the quick-release pins in the blue 5-degree LOCKING position.

CAUTION: After stacks have been attached to the array and lifted with the motors, make sure that for each cabinet, the quick-release pins for the blue LOCKING positions match those of the corresponding yellow ANGLE positions, and that the quick-release pins for the left and ride sides mirror each other.

TIP: When inserting quick-release pins in the blue LOCKING positions (for splay angles of 0.5, 1.0, 1.5, 2.0, 3.0, 4.0, 5.0, 7.0, and 9.0 degrees), a good visual clue is to make sure they are located three holes below those of the corresponding yellow ANGLE positions.

Configuring GuideALinks for Transport

When LYONs are stacked in the MCF-LYON caster frame, each of the cabinets should be set to splay angles of 0 degrees, except for the top cabinet, which should be configured as stowed.

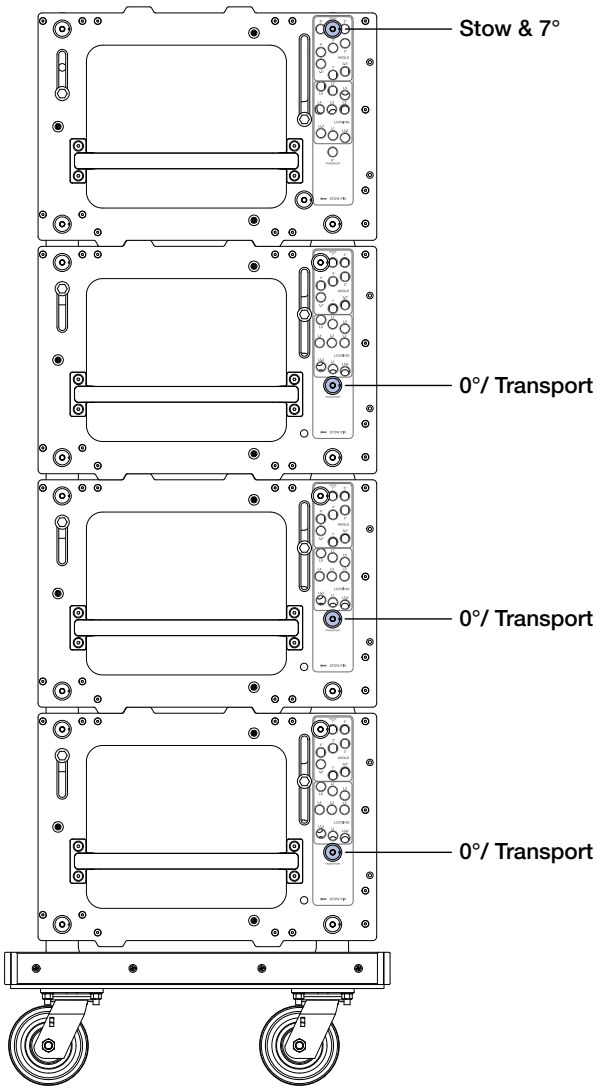

LYON Cabinets Configured for Transport

To configure GuideALinks for transport with the MCF-LYON caster frame:

1. Pin the MCF-LYON caster frame to the bottom cabinet.
2. Configure GuideALinks for the bottom three cabinets:

- Pin the rear and front GuideALinks to the cabinets above.
- Insert quick-release pins in the desired yellow ANGLE position. For example, for a splay angle of 5 degrees, insert quick-release pins in the yellow 5-degree ANGLE position.
- Remove the quick-release pins from the blue LOCKING positions and insert them in the TRANSPORT / 0-degree position (just below the blue LOCKING positions).

3. Configure GuideALinks for the top cabinet:

- Lower the rear GuideALinks and pin them to the stowed position.
- Lower the front GuideALinks and pin them to the yellow STOW / 7-degree ANGLE position.

WHEN TO MOVE THE LOCKING PINS TO THE “STOW PIN” POSITION

The quick-release pins in the blue LOCKING positions must be moved to the STOW PIN position before either lifting or lowering an array. The removal of the quick-release pins from the LOCKING positions allows the splay angles to expand and contract when assembling and disassembling the array. Moving the pins to the STOW PIN position also keeps them handy so they won’t be dropped or misplaced.

TIP: Resist the urge to put the blue locking pins in your pocket. Instead place them in the STOW PIN position before lifting or lowering the array.

TIP: For detailed instructions on assembling LYON arrays, refer to Appendix A, “Assembling Arrays with the MTG-LYON Top Grid.”

CHAPTER 3: MTG-LYON TOP GRID

With some restrictions (see Table 1 on page 19), the MTG-LYON top grid flies LYON arrays of up to 22 cabinets at a 5:1 safety ratio, or up to 18 cabinets at a 7:1 safety ratio. The grid accommodates a variety of pickup configurations with six pickup points, three each on the front and rear of the grid. The grid also includes attachment points that accommodate brackets and adapters for lasers and inclinometers (see Appendix B, “Laser Bracket”).

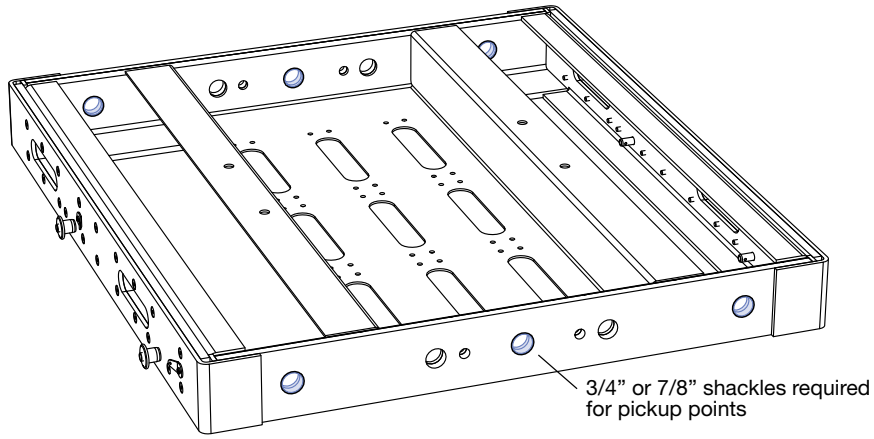

MTG-LYON Top Grid (Attachment Points Highlighted in Blue)

The MTG-LYON and its attached array can be tilted by adjusting the chain motors above the grid, or by suspending the grid from differing lengths of steel or SpanSets. The grid can be oriented to provide either maximum array downtilt or maximum arrow uptilt (see “MTG-LYON Top Grid Orientation” on page 21).

⚠ **CAUTION:** Always use the 7/16 x 1.50-inch quick-release pins (red button) included with the MTG-LYON top grid to secure the attached LYON. Do not use the quick-release pins included with LYON in the grid as they are shorter and will not lock in place.

⚠ **CAUTION:** Always use properly rated rigging hardware. The MTG-LYON top grid requires 3/4-inch or 7/8-inch shackles for its pickup points.

⚠ **CAUTION:** The two holes immediately to the left and right of the center pickup points are for aiming lasers or inclinometers (see, Appendix B, “Laser Bracket”). These holes should not be used for pickup points.

TIP: The MTG-LYON top grid includes attachment points that accommodate brackets and adapters for lasers and inclinometers. For more information, see Appendix B, “Laser Bracket.”

TIP: The MTG-LYON top grid can travel installed on top of LYON stacks in the MCF-LYON caster frame.

MTG-LYON TOP GRID KIT CONTENTS

MTG-LYON Top Grid Kit, PN 40.232.097.01

	Quantity	Part Number	Item
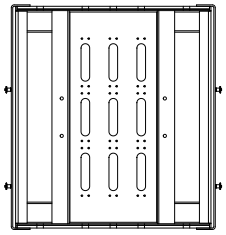	1	45.232.097.01	MTG-LYON top grid
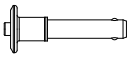	4	134.051	7/16 x 1.50” quick-release pins (red button)

MTG-LYON TOP GRID DIMENSIONS

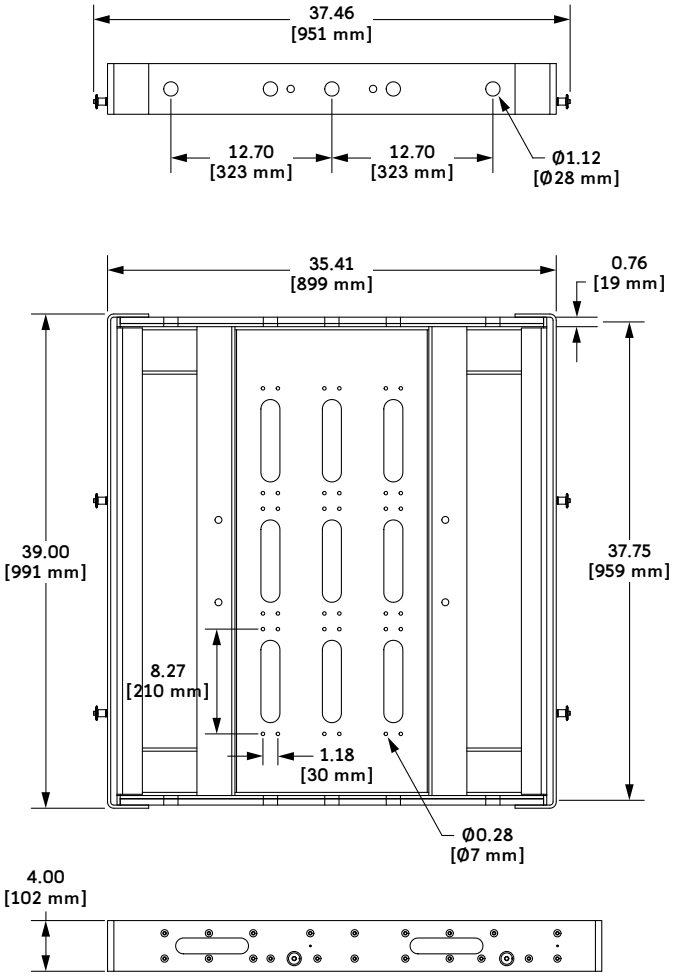

MTG-LYON Top Grid Dimensions

MTG-LYON Top Grid Weight: 171 lbs (77.6 kg)

MTG-LYON TOP GRID LOAD RATINGS

Table 1 lists the maximum number of LYON cabinets that can be suspended with the MTG-LYON top grid. For additional requirements for these load ratings, see “Additional Requirements for MTG-LYON Top Grid Load Ratings” on page 19.

Table 1: MTG-LYON Top Grid Load Ratings

	Maximum Flown LYONs		Maximum Flown LYONs	
	5:1 Safety Factor	7:1 Safety Factor	5:1 Safety Factor	7:1 Safety Factor
	15 (2,985 lbs, 1,354 kg)	12 (2,388 lbs, 1,084 kg)	22 (4,378 lbs, 1,986 kg)	18 (3,582 lbs, 1,625 kg)
Loudspeaker Splay Angle Requirements	None		Cabinets in array top half: 2° or less Middle cabinets: 5° or less Bottom three cabinets: 9° or less	Cabinets in array top half: 2° or less Middle cabinets: 5° or less Bottom three cabinets: 9° or less
Additional Requirements	None		When grid is oriented for maximum downtilt, load at rear of grid must not exceed 3,285 lbs.	Load at front or rear of grid must not exceed 2,301 lbs.

NOTE: Additional array configurations for the MTG-LYON top grid are possible. Use MAPP Online XT to verify whether configurations exceed load ratings. You can also use MAPP Online XT to verify whether configurations meet BGV C1 requirements.

NOTE: You can use load sensors to measure load points for the MTG-LYON top grid.

NOTE: The grid tilt should not be larger than the one achieved by the natural rotation of the array (except when using the PBF-LYON pull-back frame for pull-back, see Chapter 6, “PBF-LYON Pull-Back Frame”).

ADDITIONAL REQUIREMENTS FOR MTG-LYON TOP GRID LOAD RATINGS

The load ratings in Table 1 on page 19 are only supported when the following requirements are observed:

- Always use properly rated rigging hardware. The MTG-LYON top grid requires 3/4-inch or 7/8-inch shackles for its pickup points.
- Supported pickup points are: two center points, three points, or four corner points.
- If a bridle is used between pickup points, the bridle angle at the apex must not be greater than 90 degrees.
- The minimum supported leg length for front-to-rear bridle attachments is 27 inches (686 mm). The minimum supported leg length for side-to-side bridle attachments is 18 inches (457 mm). Using a bridle leg shorter than the recommended length reduces the load rating and may damage the MTG-LYON top grid.
- The array should not be pulled from points other than those on the grid (except when using the PBF-LYON pull-back frame for pull-back, see Chapter 6, “PBF-LYON Pull-Back Frame”).
- The grid tilt should not be larger than the one achieved by the natural rotation of the array (except when using the PBF-LYON pull-back frame for pull-back, see Chapter 6, “PBF-LYON Pull-Back Frame”).
- The maximum number of LYON loudspeakers that can be flown is based on a weight of 199 lbs (90.3 kg) for each LYON cabinet.
- The maximum load ratings regard the MTG-LYON top grid and flown loudspeakers as a system, including links and pins. Thus, the maximum stress point could change from one element to another in the system.
- The weight of any additional items suspended with the array, such as downfill loudspeakers, pull-back accessories, transition accessories, and cable, must be considered when calculating the maximum load.

- The weight of the MTG-LYON top grid has not been included in Table 1 on page 19. The table rates the maximum load for the grid. Pickup points and motors that will suspend the grid must be rated to the support the total weight of the grid (171 lbs, 77.6 kg) and its suspended loudspeakers (see Table 1 on page 19).

CHAPTER 4: FLYING LYON ARRAYS

MTG-LYON TOP GRID ORIENTATION

The MTG-LYON top grid can be oriented to place the array's center of gravity closer to the front or rear of the grid, for maximum downtilt or maximum uptilt.

TIP: The MTG-LYON top grid and its attached array can be tilted by adjusting the chain motors above the grid, or by suspending the grid from differing lengths of steel or SpanSets.

MTG-LYON Oriented for Maximum Array Downtilt (Forward)

When the MTG-LYON grid is oriented with its quick-release pins near the front of the grid, the array's center of gravity is closer to the front of the grid so that the grid's rear pickup points can be used to achieve maximum array downtilt.

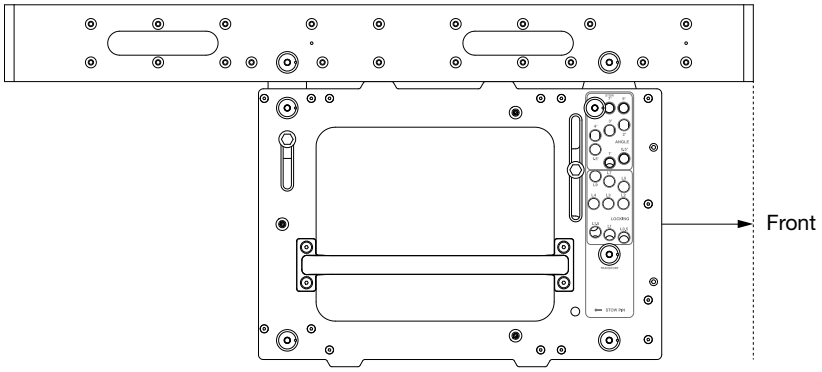

MTG-LYON Top Grid Oriented for Maximum Array Downtilt

MTG-LYON Oriented for Maximum Array Uptilt (Rearward)

When the MTG-LYON top grid is oriented with its quick-release pins near the rear of the grid, the array's center of gravity is closer to the rear of the grid so that the grid's front pickup points can be used to achieve maximum array uptilt.

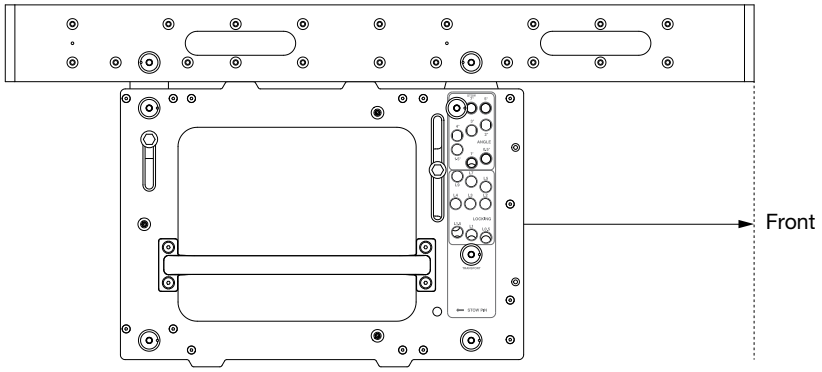

MTG-LYON Top Grid Oriented for Maximum Array Uptilt

TIP: If the array will not be flown with downtilt or uptilt, you should always use the maximum uptilt orientation, as it is easier to build arrays in this configuration, easier for the splay angles to expand when the array is lifted, and therefore easier to insert the quick-release pins in the blue LOCKING positions.

ATTACHING THE ARRAY TO THE MTG-LYON

The MTG-LYON top grid has four bottom link slots, two on each side of the grid, that accept GuideALinks from the top LYON cabinet in the array. The configuration of the GuideALinks for the top cabinet determines the angle of its attachment (see “GuideALink Configurations” on page 12). The grid includes four 7/16 x 1.50-inch quick-release pins (red button) for securing the top cabinet.

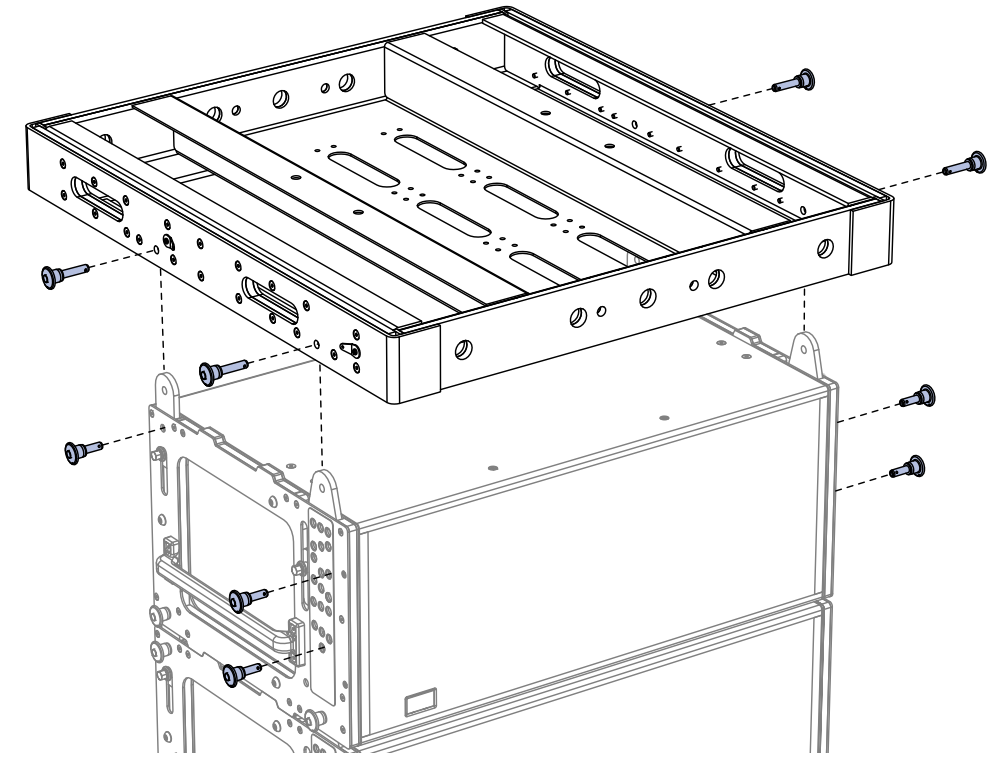

MTG-LYON Top Grid with LYON, Exploded View

⚠ **CAUTION:** Always use the 7/16 x 1.50-inch quick-release pins (red button) included with the MTG-LYON top grid to secure the attached LYON. Do not use the quick-release pins included with LYON in the grid as they are shorter and will not lock in place.

MTG-LYON PICKUP CONFIGURATIONS

The MTG-LYON top grid accommodates a variety of pickup configurations with its six pickup points, three each on the front and rear of the grid. When possible, use the front and rear pickup points to change the tilt of the grid with front and rear motors.

⚠ **CAUTION:** Always use properly rated rigging hardware. The MTG-LYON top grid requires 3/4-inch or 7/8-inch shackles for its pickup points.

⚠ **CAUTION:** When using bridles between pickup points on the MTG-LYON, the angle of the bridle at the apex should not be greater than 90 degrees to avoid increasing the load on the bridles and damaging the grid.

⚠ **CAUTION:** The two holes immediately to the left and right of the center pickup points are for aiming lasers or inclinometers (see, Appendix B, “Laser Bracket”). These holes should not be used for pickup points.

Two Pickup Points

The MTG-LYON top grid supports the following configuration with two pickup points.

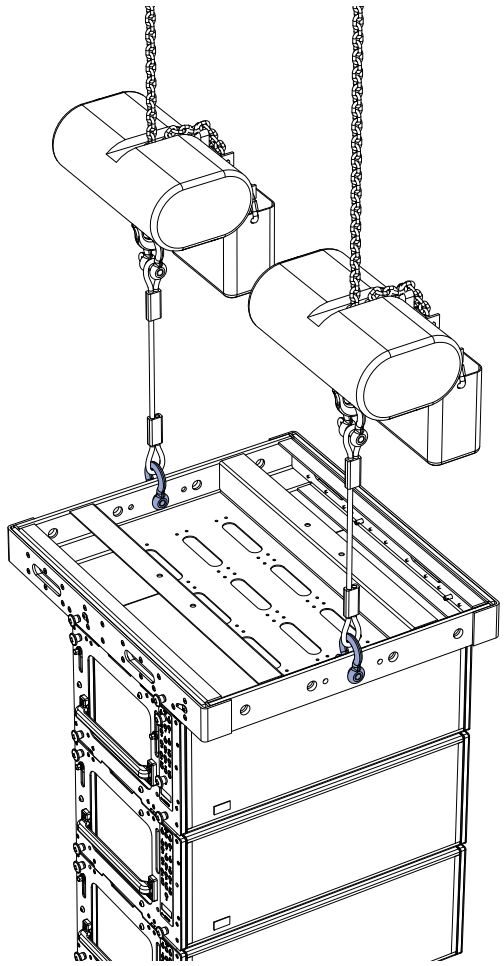

2 to 2 Center Point Configuration

⚠ **CAUTION:** When suspending MTG-LYON arrays from one or two motors, make sure each motor and ceiling pickup point (above the hook) are rated to hold the total weight of the grid and array.

NOTE: Single-motor configurations, with front-rear bridle attachments, are supported. However, this configuration does not provide any means of adding tilt to the array, nor does it facilitate configuration of the array so splay angles can fully extend and lock with the blue locking pins.

Three Pickup Points

The MTG-LYON top grid supports the following configurations with three pickup points.

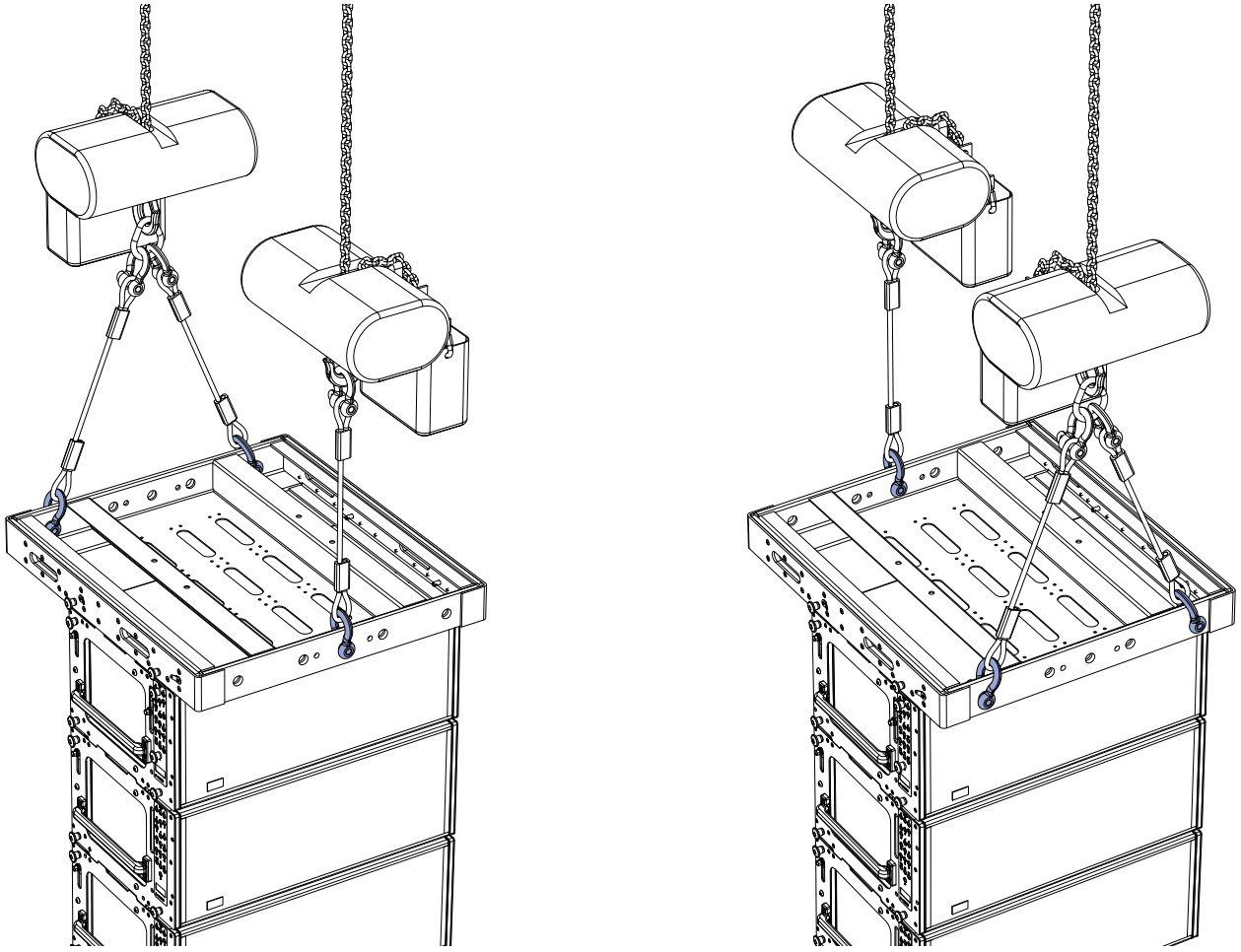

3 to 2 Corner/Center Point Configuration (Left), 3 to 2 Center/Corner Point Configuration (Right)

CAUTION: When suspending MTG-LYON arrays from one or two motors, make sure each motor and ceiling pickup point (above the hook) are rated to hold the total weight of the grid and array.

CAUTION: The minimum leg length for side-to-side bridle attachments is 18 inches (457 mm).

CAUTION: For configurations with three pickup points and a bridle, make sure to place the bridle on the side with the higher load value.

Four Pickup Points

The MTG-LYON top grid supports the following configurations with four pickup points.

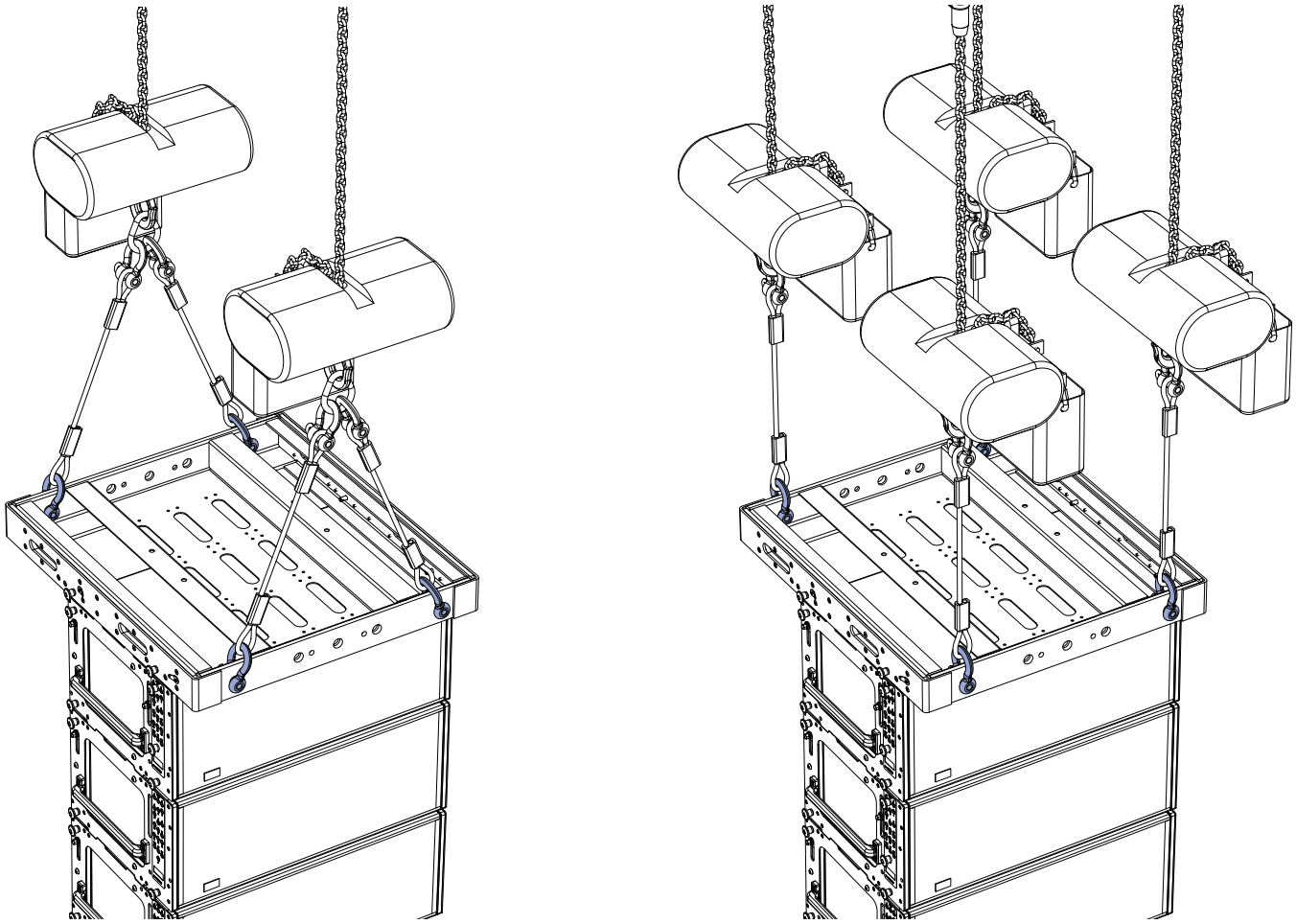

4 to 2 Corner Point Configuration (Left), 4 to 4 Corner Point Configuration (Right)

CAUTION: When suspending MTG-LYON arrays from one or two motors, make sure each motor and ceiling pickup point (above the hook) are rated to hold the total weight of the grid and array.

CAUTION: The minimum leg length for front-to-rear bridle attachments is 27 inches (686 mm).

CAUTION: The minimum leg length for side-to-side bridle attachments is 18 inches (457 mm).

TIP: For configurations with the MVP-LYON Vee plate, which provides horizontal aiming of the array, see Chapter 5, “MVP Motor Vee Plate.”

CHAPTER 5: MVP MOTOR VEE PLATE

The optional MVP motor Vee plate fine tunes the horizontal aim of LYON arrays ±21 degrees. The bottom of the Vee plate attaches to the grid's front or rear center pickup point, while the top corners of the Vee plate attach to two motors, which, when adjusted, affect the horizontal rotation of the grid. The Vee plate's attachment points require 3/4-inch or 7/8-inch shackles.

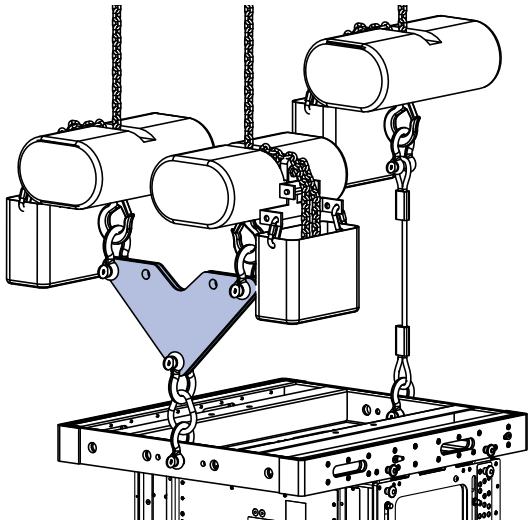

MVP Motor Vee Plate Attached to MTG-LYON Top Grid

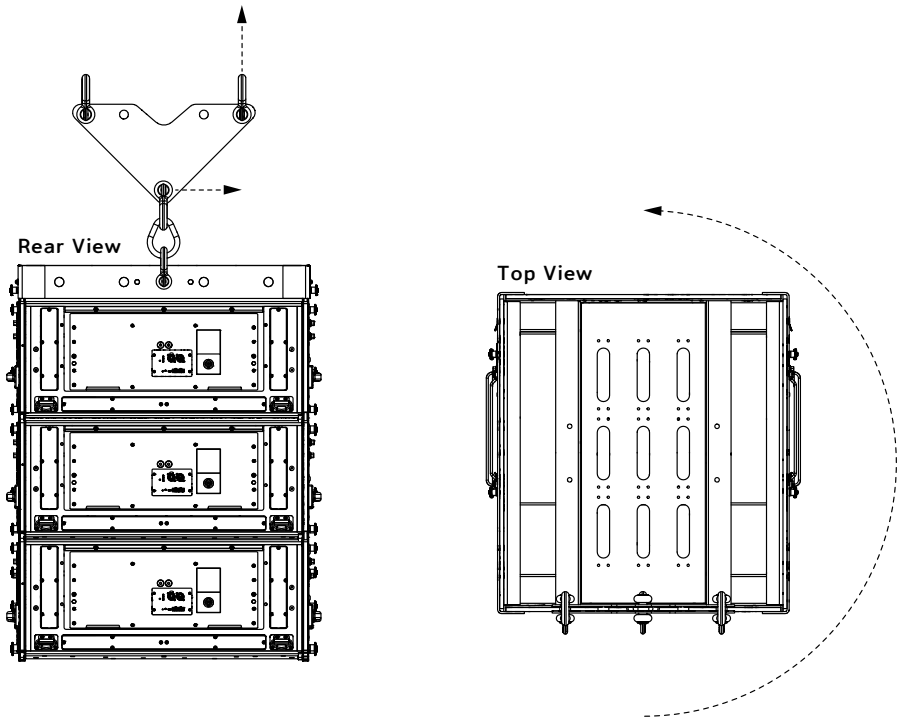

MVP Motor Vee Plate, Pulling Up on Right Motor Rotates Grid Counterclockwise

⚠ **CAUTION:** Always use properly rated rigging hardware. The MVP motor Vee plate requires 3/4-inch or 7/8-inch shackles for its attachment points.

CAUTION: The MVP motor Vee plate should always be placed on the grid side (front or rear) with the lower load value.

NOTE: The MVP motor Vee plate is compatible with any Meyer Sound multipurpose grid or top grid with center pickup points.

MVP MOTOR VEE PLATE KIT CONTENTS

MVP Motor Plate Kit, PN 40.215.184.01

	Quantity	Part Number	Item
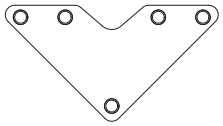	1	45.215.184.01	MVP motor Vee plate

MVP Motor Vee Plate Weight: 20 lbs (9.1 kg)

MVP MOTOR VEE PLATE LOAD RATINGS

The MVP motor Vee plate has the following load ratings:

	5:1	7:1
Maximum Number of LYON Cabinets (+ MTG-LYON Top Grid)	22	18

CHAPTER 6: PBF-LYON PULL-BACK FRAME

The optional PBF-LYON pull-back frame attaches to the bottom cabinet in LYON arrays and provides pull-back for extreme array downtilts. The pull-back frame can also be used for pull-up to expand the array's splay angles during installation so the blue locking pins can be more easily inserted. The pull-back frame is secured to the bottom cabinet with two 7/16 x 0.90-inch quick-release pins (black button) (included with LYON). The PBF-LYON pull-back frame requires 5/8-inch shackles for its two pickup points

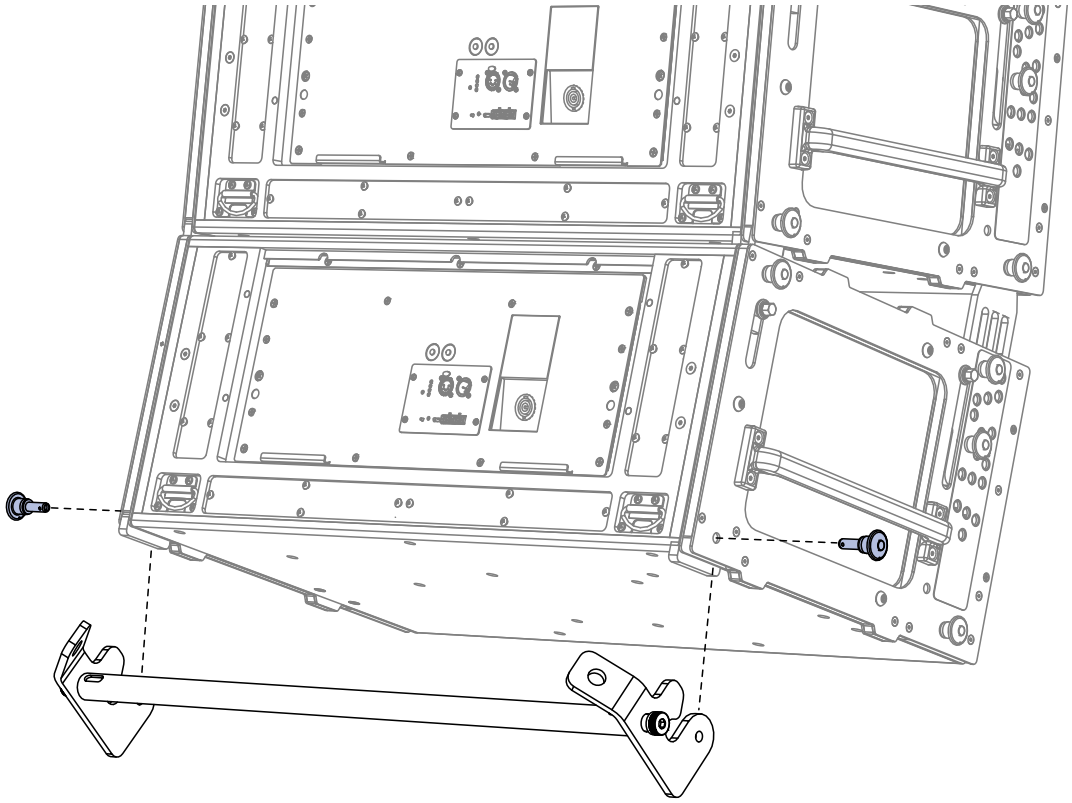

PBF-LYON Pull-Back Frame Attached to Bottom LYON Cabinet

- When the PBF-LYON is used for **pull-back**, to tilt the array, the frame must be pulled by a motor separate from (and usually behind) the MTG-LYON top grid. The pull-back motor must *not* be attached to the top grid.

  ⚠ **CAUTION:** When configuring arrays with pull-back, when in final position, the pull-back chain should not be more than ±30 degrees from vertical.

- When the PBF-LYON is used for **pull-up**, to expand the array's splay angles during installation so the blue locking pins can be more easily inserted, the frame is pulled by a motor placed between the frame and the RPP-LEO-M rear pull-up plate (attached to the MTG-LYON top grid). For more information, see Chapter 7, "RPP-LEO-M Rear Pull-Up Plate."

  ⚠ **CAUTION:** When flying an array, the total weight of the array, including any pull-back and pull-up hardware, should be calculated before the array is flown to verify its weight does not exceed the load ratings for the MTG-LYON top grid (see "MTG-LYON Top Grid Load Ratings" on page 19).

  ⚠ **CAUTION:** Always use properly rated rigging hardware. The PBF-LYON pull-back frame requires 5/8-inch shackles for its pickup points.

PBF-LYON PULL-BACK FRAME KIT CONTENTS

PBF-LYON Pull-Back Frame Kit, PN 40.232.125.01

	Quantity	Part Number	Item
	1	45.232.125.01	PBF-LYON pull-back frame

PBF-LYON PULL-BACK FRAME DIMENSIONS

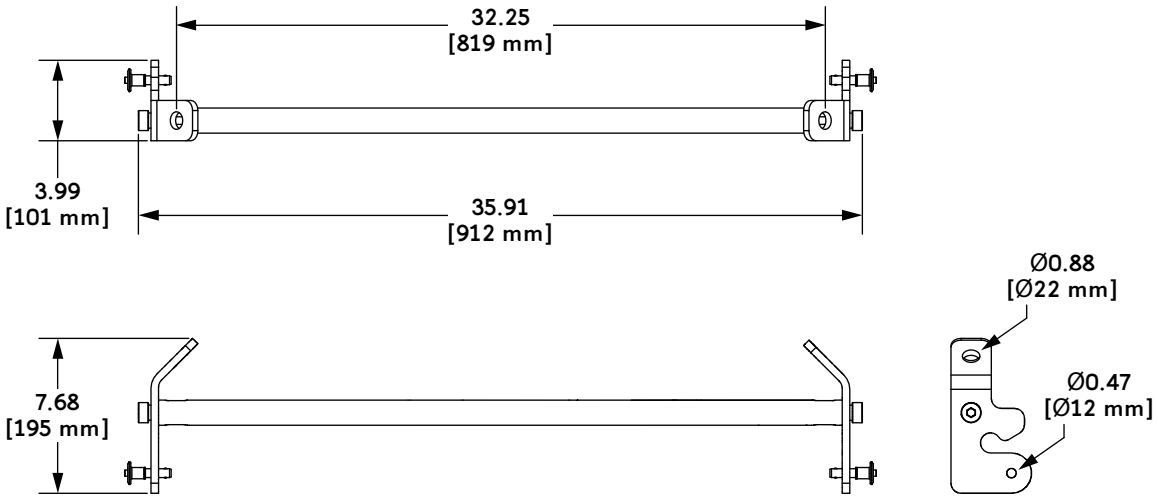

PBF-LYON Pull-Back Frame Dimensions

PBF-LYON Pull-Back Frame Weight: 9.5 lbs (4.3 kg)

PBF-LYON PULL-BACK FRAME LOAD RATINGS

The PBF-LYON pull-back frame has the following load ratings:

- 5:1 safety factor, 3400 lbs (1542 kg)
- 7:1 safety factor, 2400 lbs (1088 kg)

CAUTION: The minimum leg length for bridle attachments to the PBF-LYON pull-back frame is 23 inches (584 mm).

CHAPTER 7: RPP-LEO-M REAR PULL-UP PLATE

The optional RPP-LEO-M rear pull-up plate helps assemble large flown arrays with wide splay angles. Flown arrays can be pulled up (with a motor) to expand its splay angles so the blue locking pins can be more easily inserted. The pull-up motor should be 1/2 ton or smaller and placed between the pull-up plate and the PBF-LEO-M pull-back frame. The RPP-LEO-M rear pull-up plate includes two 1/2 x 2.50-inch quick-release pins (blue button) for securing the plate to the MTG-LYON top grid.The RPP-LEO-M rear pull-up plate requires a 5/8-inch shackle for its single attachment point.

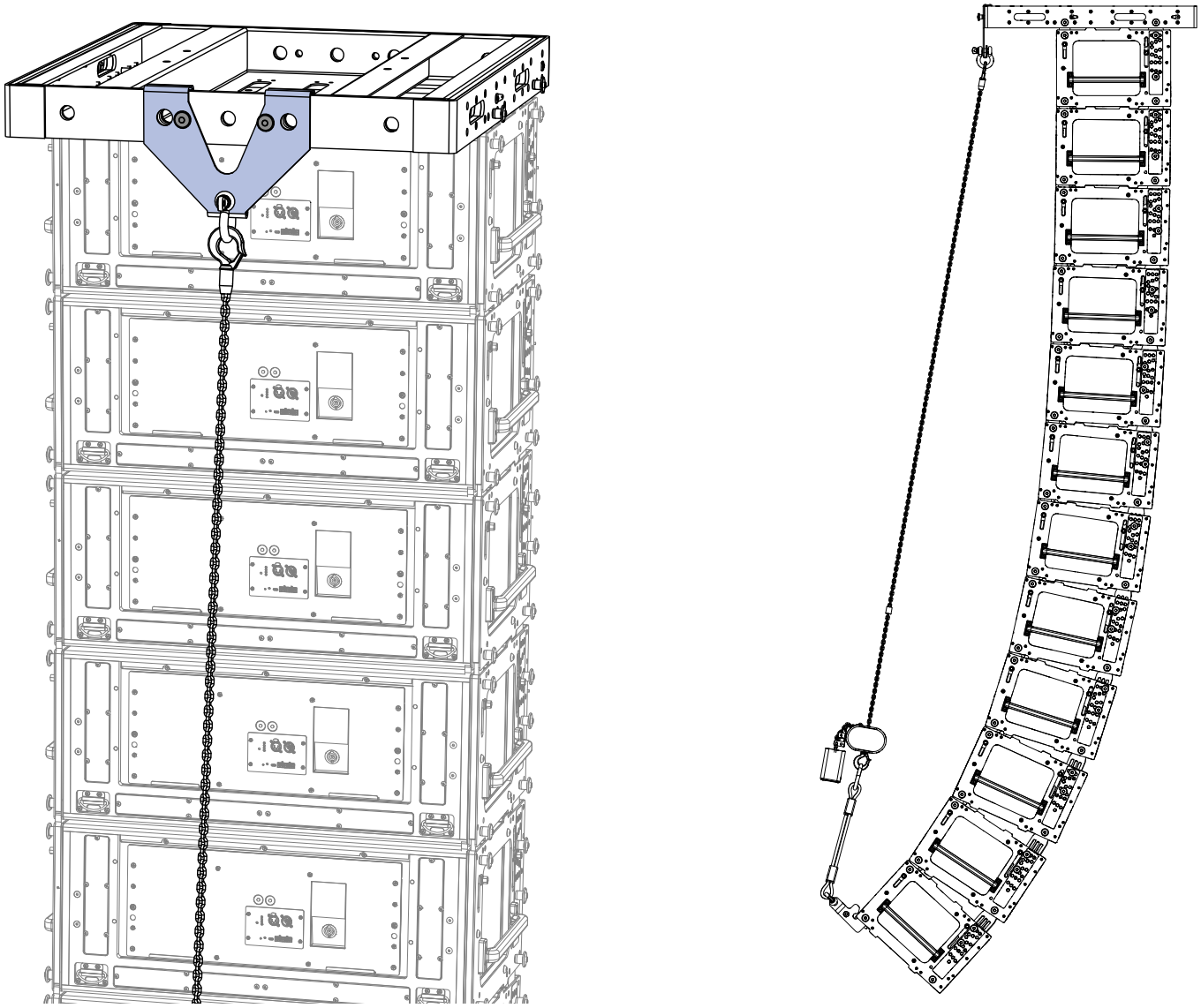

RPP-LEO-M Rear Pull-Up Plate Attached to MTG-LYON Top Grid (Left) and PBF-LYON Pull-Back Frame (Right)

⚠ **CAUTION:** Use a 1/2 ton motor or smaller for pull-up with the RPP-LEO-M rear pull-up plate. Larger motors could damage cabinets and rigging hardware if pulled beyond their configured splay angles.

⚠ **CAUTION:** When flying an array, the total weight of the array, including any pull-back and pull-up hardware, should be calculated before the array is flown to verify its weight does not exceed the load ratings for the MTG-LEO-M top grid (see “MTG-LYON Top Grid Load Ratings” on page 19).

⚠ **CAUTION:** Always use the 1/2 x 2.50-inch quick-release pins (blue button) included with the RPP-LEO-M rear pull-up plate to secure the plate to the MTG-LYON top grid. Do not use the quick-release pins included with the MTG-LYON top grid as they are shorter and will not lock in place.

⚠ **CAUTION:** Always use properly rated rigging hardware. The RPP-LEO-M rear pull-up plate and PBF-LYON pull-back frame require 5/8-inch shackles for their pickup points.

RPP-LEO-M REAR PULL-UP PLATE KIT CONTENTS

RPP-LEO-M Rear Pull-Up Plate Kit, PN 40.215.181.01

	Quantity	Part Number	Item
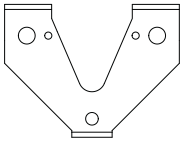	1	61.215.181.01	RPP-LEO-M rear pull-up plate
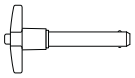	2	134.007	1/2 x 2.50” quick-release pins (blue button)

RPP-LEO-M Rear Pull-Up Plate Weight: 6 lbs (2.7 kg)

RPP-LEO-M REAR PULL-UP PLATE LOAD RATINGS

The RPP-LEO-M rear pull-up plate has the following load ratings:

- 7:1 safety factor, 1325 lbs (601 kg)
- 5:1 safety factor, 1855 lbs (841 kg)
- Maximum chain motor size, 1/2 ton

CHAPTER 8: MCF-LYON CASTER FRAME

The MCF-LYON caster frame safely supports up to four LYONs for transport, making it easy to assemble and disassemble arrays in blocks of four cabinets. The caster frame's sturdy construction allows it to be conveniently moved with forklifts.

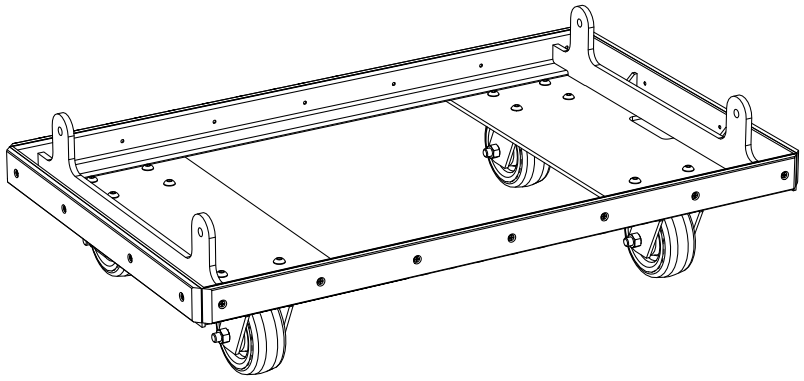

MCF-LYON Caster Frame

The caster frame includes four fixed, 0-degree links that attach to the LYON at the bottom of the stack and are secured with the 7/16 by 0.90-inch quick-release pins (black button) included with LYON.

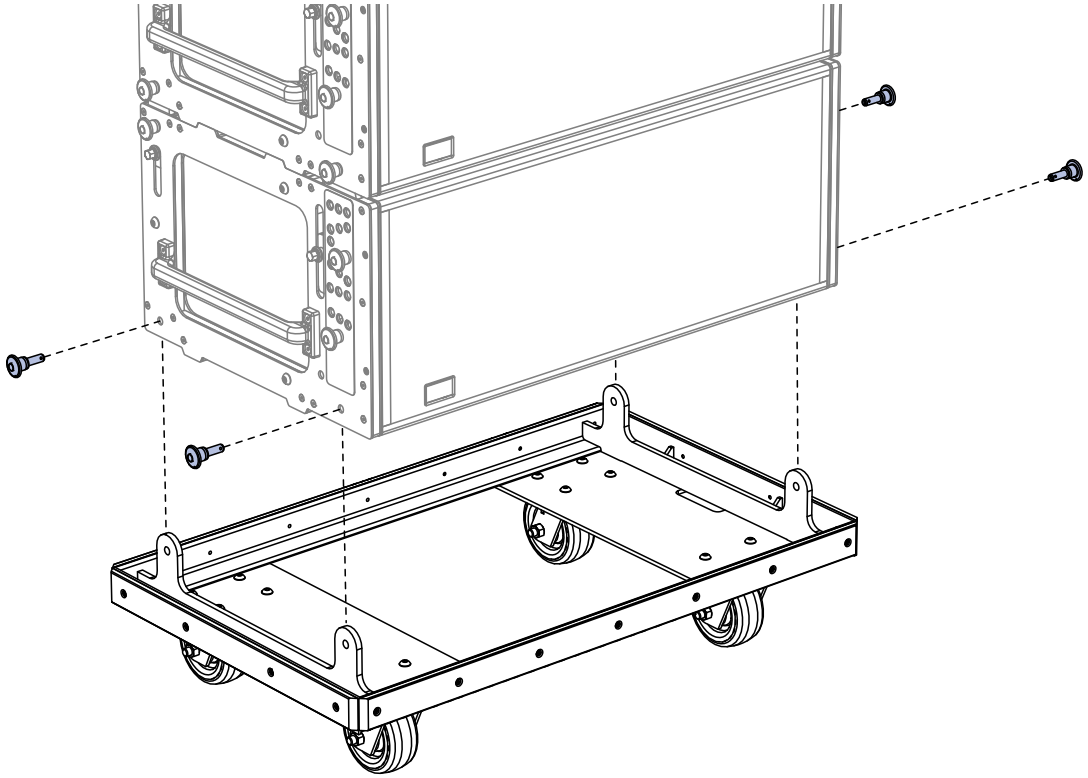

MCF-LYON Caster Frame with LYON Stack, Exploded View

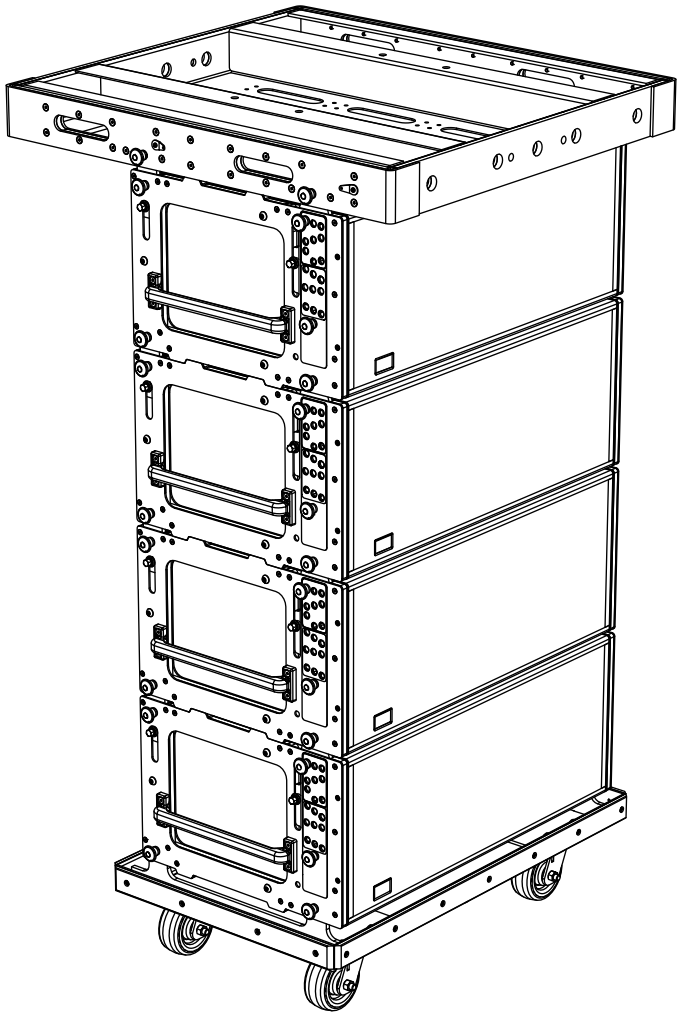

MCF-LYON Caster Frame with LYON Stack and MTG-LYON Top Grid

TIP: Durable nylon covers, sized for stacks of 2, 3, and 4 units, are available to ensure that LYON is completely road ready.

TIP: The MTG-LYON top grid can travel installed on top of LYON stacks in the MCF-LYON caster frame.

TIP: The MTF-LEO-M/LYON transition frame can travel installed on top of LYON stacks in the MCF-LYON caster frame.

TIP: When transporting the MTG-LYON top grid on top of LYON stacks in the MCF-LYON caster frame and additional height is needed to avoid colliding with other LYON stacks, you can use the optional Wheel Frame Extension kit (PN 40.132.150.01) to raise the stack by 1 inch.

MCF-LYON CASTER FRAME DIMENSIONS

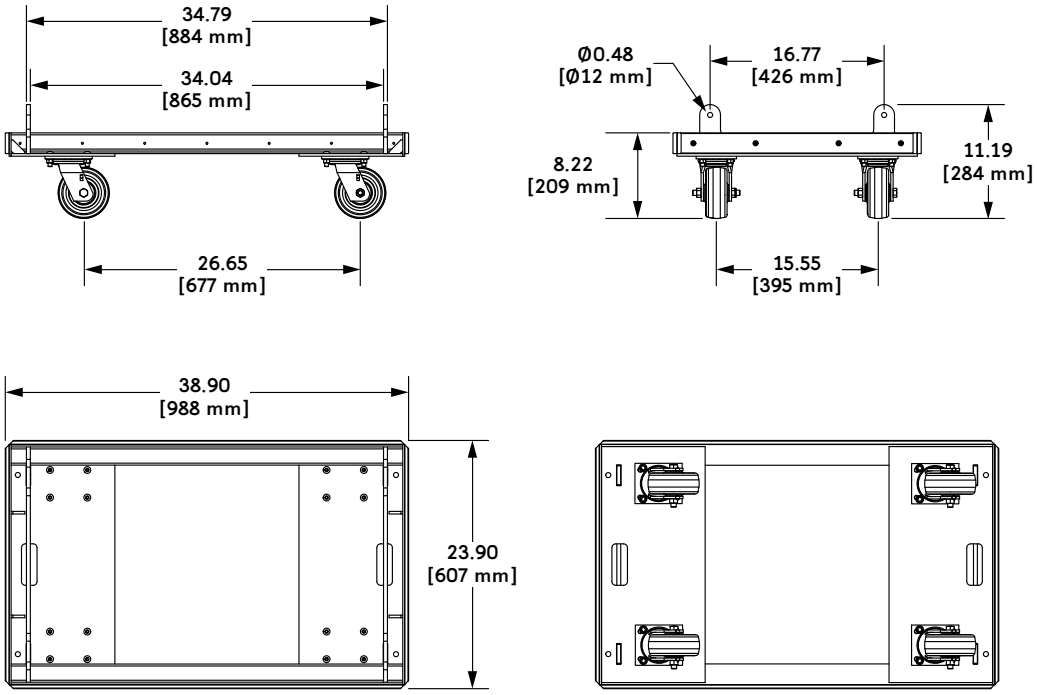

MCF-LYON Caster Frame Dimensions

MCF-LYON Caster Frame Weight: 90 lbs (40.8 kg)

MCF-LYON TRUCK PACKING EXAMPLES

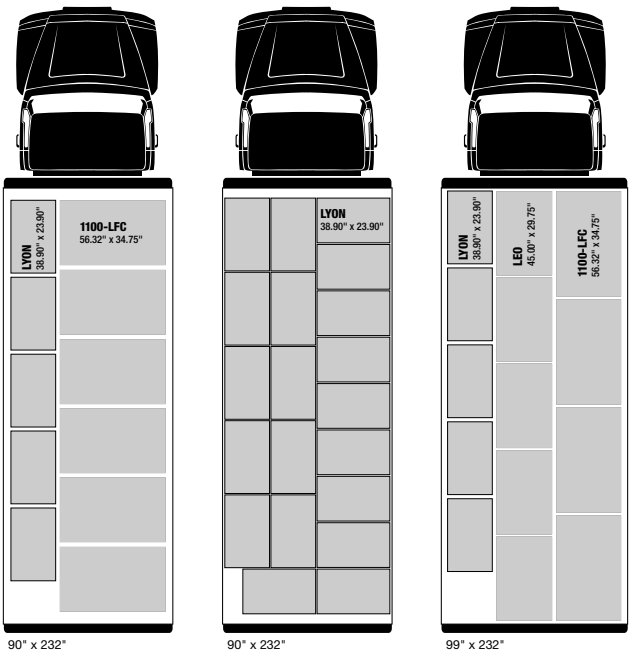

MCF-LYON Truck Packing Configurations

SAFETY GUIDELINES FOR THE MCF-LYON CASTER FRAME

- Do not stack more than four LYONs in the MCF-LYON caster frame.
- While the MCF-LYON supports up to four cabinets, three cabinets are recommended for more stable transport. Exercise extreme caution when moving stacks of four cabinets with the caster frame to avoid tipping.
- Do not move stacks in the front-to-back direction of the LYONs (the long side); always move stacks sideways to avoid tipping.

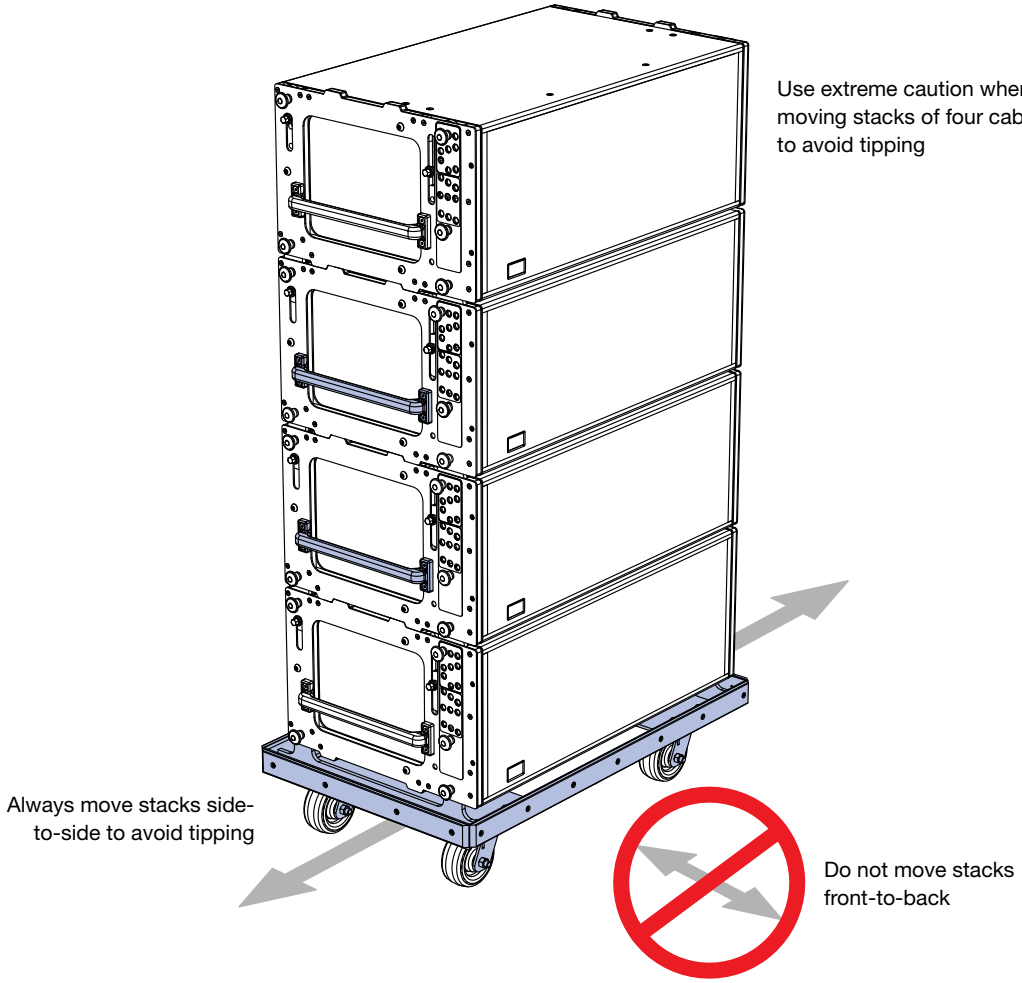

- To avoid tipping, transport stacks with LYONs linked and locked at 0-degree splay angles. For more information, see “Configuring GuideALinks for Transport” on page 14.
- When lifting a LYON stack with a forklift, always keep the forks wide and close to the caster frame’s wheels. Failing to do so may bend the caster frame or cause the stack to tip.
- The caster frame must be removed before flying the array.

APPENDIX A: ASSEMBLING ARRAYS WITH THE MTG-LYON TOP GRID

To assemble a LYON array with the MTG-LYON top grid:

1. Attach the MTG-LYON top grid to the motors:

- Place the MTG-LYON on the floor or on a road trunk in the approximate location where the rigging points have been established and the motors have been hung.
- Attach 3/4-inch or 7/8-inch shackles to the desired pickup points on the MTG-LYON (see “MTG-LYON Pickup Configurations” on page 23).

NOTE: A 2-foot length of wire rope, or deck chain, placed between the shackles and the motor’s chain hooks is recommended to prevent the chain bags from getting in the way of the top loudspeaker.

- Lower the motors and attach the chain hooks to the shackles.
- Raise the grid slightly higher than the first stack of LYON loudspeakers to be linked.

2. Link the MTG-LYON top grid to the first LYON stack:

- Roll the MCF-LYON caster frame with the first LYON stack into position under the grid. Up to four LYON loudspeakers can be safely transported with the caster frame. Make sure the GuideALinks for the top cabinet have been retracted and stowed.
- Lower the grid so it is 1–3 inches above the top cabinet in the stack. Adjust the placement of the stack on the floor so the top cabinet’s GuideALinks align with the grid’s link slots. Extend the front GuideALinks from the top cabinet into the grid’s link slots and secure them with the 7/16 x 1.50-inch quick-release pins (red button) included with the grid. Lower the grid so it touches the top cabinet. The front GuideALinks keep the grid aligned to the cabinet. Extend the rear GuideALinks into the grid and secure them with the 7/16 x 1.50-inch quick-release pins (red button) included with the grid.
- Make sure each cabinet in the stack is pinned to the cabinet above it with the 7/16 x 0.90-inch LYON quick-release pins (black button).
- Set the splay angles for the cabinets by inserting quick-release pins in the yellow ANGLE positions. Available angles are 0.0, 0.5, 1.0, 1.5, 2.0, 2.5, 3.0, 4.0, 5.0, 7.0, and 9.0 degrees. Use the 7/16 x 0.90-inch LYON quick-release pins (black button).
- Remove the quick-release pins from the blue LOCKING positions and insert them temporarily in the STOW PIN position. This will allow the splay angles to extend when the stack is lifted.

TIP: Resist the urge to put the blue locking pins in your pocket. Instead place them in the STOW PIN position before lifting or lowering the array.

- Raise the grid so the loudspeakers are suspended slightly off the floor and remove the two rear quick-release pins securing the caster frame to the bottom cabinet. Rest the rear wheels of the caster frame on the floor and remove the two front quick-release pins to detach the caster frame from the bottom cabinet. Return the four quick-release pins to the bottom cabinet. Roll away the empty caster frame.
- Lock the splay angles for the cabinets by removing the quick-release pins from the STOW PIN position and inserting them in the blue LOCKING positions. The pins should match those in the yellow ANGLE positions. Use the 7/16 x 0.90-inch LYON quick-release pins (black button).

TIP: When inserting quick-release pins in the blue LOCKING positions (for splay angles of 0.5, 1.0, 1.5, 2.0, 3.0, 4.0, 5.0, 7.0, and 9.0 degrees), a good visual clue is to make sure they are located three holes below those of the corresponding yellow ANGLE positions.

- Attach the AC power, audio, and RMS cables to the new loudspeaker stack.
- Raise the grid so the suspended loudspeakers are slightly higher than the next stack of LYONs to be linked.

3. Link the suspended LYONs to the next stack in the array:

- Roll the next stack of LYONs into position under the suspended loudspeakers. Make sure the GuideALinks for the top cabinet in the new stack have been retracted and stowed.

CAUTION: If the GuideALinks are not stowed as described in this step, you may damage the bottom of the suspended cabinet when lowering it.

- Lower the suspended loudspeakers so the bottom cabinet is 1–3 inches above the top cabinet on the floor. Adjust the placement of the stack on the floor so the top cabinet's GuideALinks align with the link slots of the suspended cabinet above it. Extend the front GuideALinks from the top cabinet into the link slots of the suspended cabinet above it and secure them with the 7/16 x 0.90-inch LYON quick-release pins (black button).
- Lower the suspended loudspeakers so the bottom cabinet touches the cabinet on the floor. The front GuideALinks keep the cabinets aligned. Extend the rear GuideALinks into the suspended cabinet and secure them with the 7/16 x 0.90-inch LYON quick-release pins (black button).
- Make sure each cabinet in the stack on the floor is pinned to the cabinet above it with the 7/16 x 0.90-inch LYON quick-release pins (black button).
- Set the splay angles for the cabinets by inserting quick-release pins in the yellow ANGLE positions. Available angles are 0.0, 0.5, 1.0, 1.5, 2.0, 2.5, 3.0, 4.0, 5.0, 7.0, and 9.0 degrees. Use the 7/16 x 0.90-inch LYON quick-release pins (black button).
- Remove the quick-release pins from the blue LOCKING positions and insert them temporarily in the STOW PIN position. This will allow the splay angles to extend when the stack is lifted.
- Raise the grid so the loudspeakers are suspended slightly off the floor and remove the two rear quick-release pins securing the caster frame to the bottom cabinet. Rest the rear wheels of the caster frame on the floor and remove the two front quick-release pins to detach the caster frame from the bottom cabinet. Return the four quick-release pins to the bottom cabinet. Roll away the empty caster frame.
- Lock the splay angles for the cabinets by removing the quick-release pins from the STOW PIN position and inserting them in the blue LOCKING positions. The pins should match those in the yellow ANGLE positions. Use the 7/16 x 0.90-inch LYON quick-release pins (black button).
- Attach the AC power, audio, and RMS cables to the new loudspeaker stack.
- Raise the grid so the suspended loudspeakers are slightly higher than the next stack of LYONs to be linked.

4. Repeat the previous steps until the entire array has been assembled. All loudspeaker-to-loudspeaker links should be secured with the 7/16 x 0.90-inch LYON quick-release pins (black button).

NOTE: As loudspeakers are added to the suspended array, try to keep the bottom cabinet parallel to the stage, by lowering the rear motors, to ease the process of adding more loudspeakers to the array. In some cases, when the array length is longer than 10–12 loudspeakers, it may be necessary to push the suspended array downstage and lower the array to close the gap between the rear of the flown and stacked loudspeakers.

CAUTION: Do not lift a LYON stack until all four GuideALinks have been pinned for each cabinet. Failing to do so could damage the GuideALinks for the linked units.

APPENDIX B: LASER BRACKET

A laser bracket is available from Meyer Sound that mounts third-party inclinometers and lasers (such as the SSE ProSight laser) on the MTG-LYON top grid. These devices facilitate aiming the array and verifying its hanging angle. The MTG-LYON top grid offers the flexibility of nine mounting positions for the laser bracket so it won't conflict with center attachment points, the MVP motor Vee plate, or the RPP-LEO-M rear pull-up plate. The laser shines through one of three center holes in the front or rear of the grid.

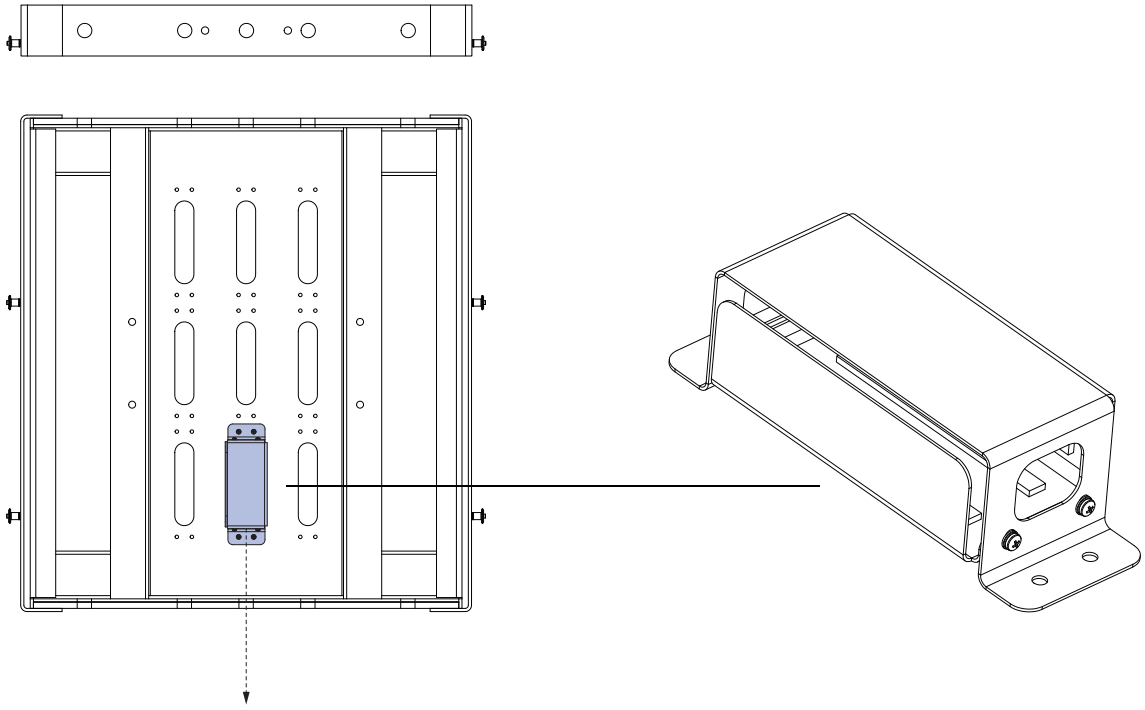

MTG-LYON Top Grid with Laser Bracket

NOTE: The laser bracket must be installed before loudspeakers are flown from the grid. Install the included panhead screws from the bottom up with the threads oriented up. Use the included flat washers to avoid scratching the grid.

Laser Bracket Kit Contents

PN 40.215.152.01

	Quantity	Part Number	Item
	1	45.215.152.01	ProSight laser bracket assembly
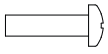	4	101.544	10-32 X 0.75" panhead screws
	4	109.521	10-32" hex nuts
	8	113.519	Flat washers

Meyer Sound Laboratories, Inc.
2832 San Pablo Avenue
Berkeley, CA 94702
USA
www.meyersound.com
sales@meyersound.com
Phone: +1 510.486.1166
Fax: +1 510.486.8356

Meyer Sound Germany GmbH
Horresser Berg 4a
D-56410 Montabaur
Germany
www.meyersound.de
sales@meyersound.de
T: +49 2602 99908-0
F: +49 2602 99908-99

EU Declaration of Conformity

Within the meaning of the EC Machinery Directive 2006/42/EC, EN ISO 17050-1

Product Identification

Cat. Number	Product names
40.232.038.01	MTG-LYON GRID KIT
40.232.125.01	PBF-LYON PULL BACK BAR KIT
40.215.250.01	MTF-LEO/LYON TRANSITION FRAME KIT

Brand : Meyer Sound Laboratories
Batch/Serial Nr : See Batch or Serial Number on Item
For use with LYON SERIES Loudspeaker factory rigging.

Manufacturer

Name : Meyer Sound Laboratories
Address : 2832 San Pablo Ave
Berkeley California 94702
Country : United States of America
Representative : Meyer Sound Lab. GmbH

Authorized Representative/Distributor in Europe

Name : Meyer Sound Lab. GmbH
Horresser Berg 4A, 56410
Montabaur
Country : Germany

Means of Conformity

Meyer Sound Laboratories declares that the products listed are in conformity with the essential requirements and provisions of Council Machine Directive 2006/42/EC SAFETY OF MACHINERY by means of type testing, and conformity with National standards and technical specifications applied, in particular: EN 292, DIN 18800, BGV C1. Professional installation is required in accordance with provided Operating Instructions and QuickFly™ Rigging System Installation manual.

Signed _____ Dated 5/05/2014

Name : Ms. Margie Garza, Director of Quality
Place and date : Berkeley, California, USA. on May 5, 2014.

Meyer Sound Laboratories, Inc.
2832 San Pablo Avenue
Berkeley, CA 94702
USA

www.meyersound.com
sales@meyersound.com
Phone: +1 510.486.1166
Fax: +1 510.486.8356

Meyer Sound Germany GmbH
Horresser Berg 4a
D-56410 Montabaur
Germany

www.meyersound.de
sales@meyersound.de
T: +49 2602 99908-0
F: +49 2602 99908-99

EU Declaration of Conformity

Within the meaning of the EC Machinery Directive 2006/42/EC, EN ISO 17050-1

Product Identification

Cat. Number	Product names
40.215.114.01	MTG-LEO-M GRID
40.215.136.01	PBF-LEO-M PULL BACK FRAME
40.215.184.01	MVP-LEO-M MOTOR VEE PLATE
40.215.131.01	MTF-LEO-M/MICA TRANSITION FRAME
40.215.181.01	RPP-LEO-M REAR PULLUP PLATE
40.215.023.01	LEO-M LF RIGGING FRAME REPLACEMENT KIT
40.215.024.01	LEO-M RT RIGGING FRAME REPLACEMENT KIT

Brand : Meyer Sound Laboratories

Batch/Serial Nr : See Batch or Serial Number on Item

For use with LEO-M SERIES Loudspeaker factory rigging.

Manufacturer

Name : Meyer Sound Laboratories
Address : 2832 San Pablo Ave
Berkeley California 94702
Country : United States of America
Representative : Meyer Sound Lab. GmbH

Authorized Representative/Distributor in Europe

Name : Meyer Sound Lab. GmbH
Horresser Berg 4A, 56410
Montabaur
Country : Germany

Means of Conformity

Meyer Sound Laboratories declares that the products listed are in conformity with the essential requirements and provisions of Council Machine Directive 2006/42/EC SAFETY OF MACHINERY by means of type testing, and conformity with National standards and technical specifications applied, in particular: EN 292, DIN 18800, BGV C1. Professional installation is required in accordance with provided Operating Instructions and QuickFly™ Rigging System Installation manual.

Signed _____ Dated 11/26/2013

Name : Ms. Margie Garza, Director of Quality
Place and date : Berkeley, California, USA. on November 26, 2013.

thinking sound

Meyer Sound Laboratories Inc.
2832 San Pablo Avenue
Berkeley, CA 94702

www.meyersound.com
T: +1 510 486.1166
F: +1 510 486.8356

© 2014
Meyer Sound. All rights reserved.
MTG-LYON Top Grid Assembly Guide — PN 05.232.097.01 A