700-HP RIGGING GRID AND ACCESSORIES

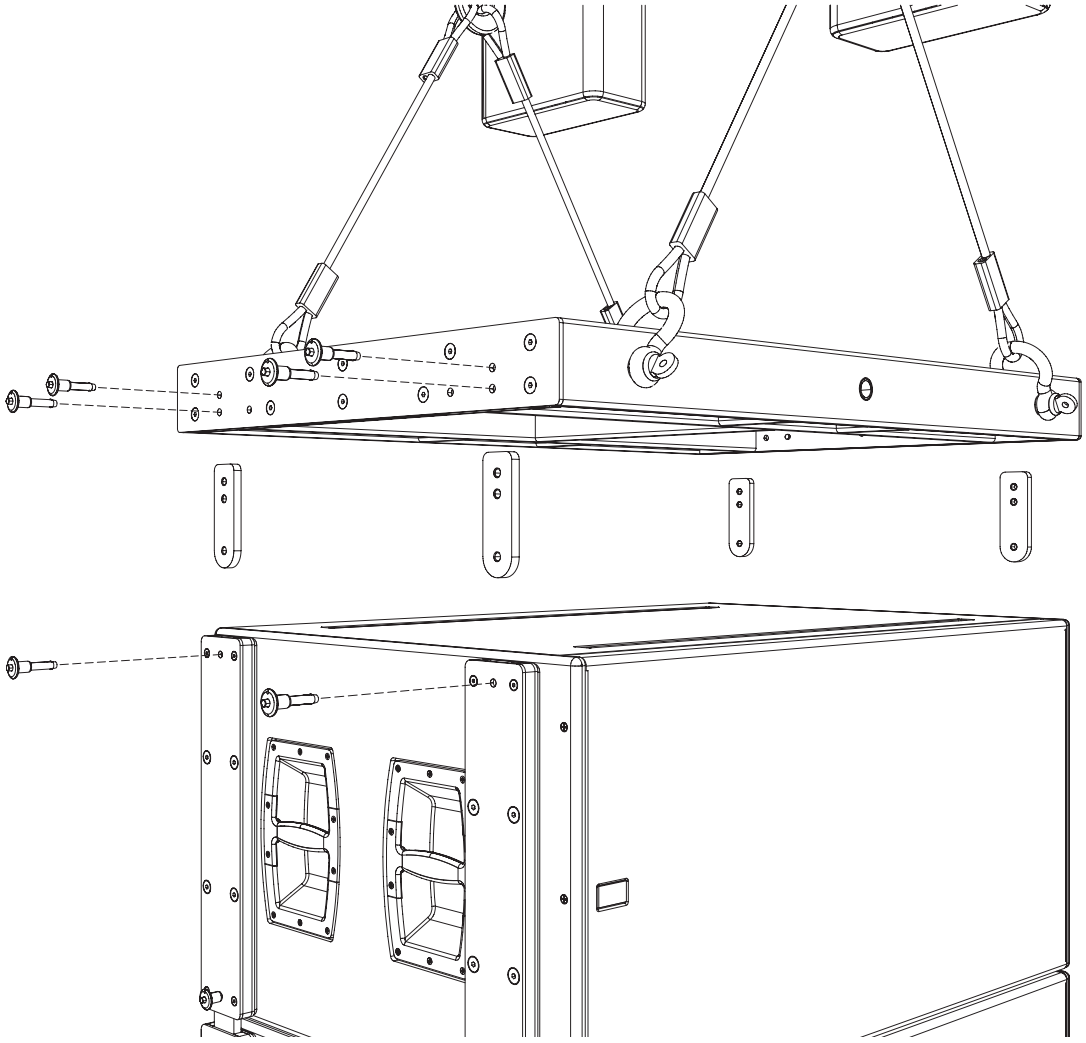

CONTENTS

This Assembly Guide provides instructions on how to safely assemble and use the MRK-700 rigging kit, MTG-700 top grid and MCF-700 caster frame. In addition to descriptions of the major rigging components used with the 700-HP ultrahigh-power loudspeaker, this guide will show you how the components work together, with examples of common uses.

1. SAFETY STATEMENT 5

Scope of this Manual 5
Load Ratings and Specifications 5
Regulatory Compliance 5
Safety Responsibilities “Above the Hook” 6
Inspection and Maintenance 6
Annual Comprehensive Examination and Test Program 6
Replacement Parts 6
Training 6

2. 700-HP SUBWOOFER RIGGING COMPONENTS 7

MRK-700 Rigging Kit 7
List of Contents: MRK-700 Rigging Kit 7
Field Installation of the MRK-700 Rigging Kit 8
MTG-700 Top Grid 9
List of Contents: MTG-700 Top Grid Kit 9

3. USING THE 700-HP SUBWOOFER WITH THE MTG-700 TOP GRID 10

Load Ratings Overview 11
Considerations 11
Prerequisite Conditions 11
700-HP System Load Ratings and Pickup Configurations
Using One or Both Center Pickup Points 12
Using All Four Corner Pickup Points 13

4. USING THE 700-HP SUBWOOFER WITH THE MCF-700 CASTER FRAME 14

MCF-700 Caster Frame 14

1. SAFETY STATEMENT

Please read this Statement carefully and in its entirety. It contains important information regarding safety issues and responsibilities related to your rigging system.

SCOPE OF THIS MANUAL

Although this manual contains much useful information on rigging in general, it does not claim to be a comprehensive resource on the subject. This manual assumes that the owners and/or users of a QuickFly system are knowledgeable and experienced in the areas of rigging and flying loudspeaker systems. MANY ISSUES OF CRUCIAL CONCERN, SUCH AS THE DETERMINATION OF APPROPRIATENESS AND CONDITION OF VENUE RIGGING POINTS, CANNOT BE ADDRESSED HERE. THEREFORE, THE USER MUST ASSUME ALL RESPONSIBILITY FOR THE APPROPRIATE USE OF QUICKFLY SYSTEMS IN ANY PARTICULAR LOCATION OR CIRCUMSTANCE.

THE SUSPENSION OF LARGE, HEAVY OBJECTS IN PUBLIC PLACES IS SUBJECT TO NUMEROUS LAWS AND REGULATIONS AT THE NATIONAL/FEDERAL, STATE/PROVINCIAL, AND LOCAL LEVELS. THIS MANUAL DOES NOT ADDRESS THE SPECIFICS OF ANY SUCH APPLICABLE LAWS AND GOVERNMENT REGULATIONS. THIS MANUAL DETAILS PROCEDURES AND PRACTICES CONSISTENT WITH THOSE GENERALLY ACKNOWLEDGED AS ALLOWABLE AND SAFE IN THE UNITED STATES. HOWEVER, THE USER MUST ASSUME RESPONSIBILITY FOR MAKING SURE THAT USE OF ANY QUICKFLY SYSTEM AND ITS COMPONENTS IN ANY PARTICULAR CIRCUMSTANCE OR VENUE CONFORMS TO ALL APPLICABLE LAWS AND REGULATIONS IN FORCE AT THE TIME.

LOAD RATINGS AND SPECIFICATIONS

Long-term safe operation is a central concern in the design and manufacture of any rigging/flying system. Meyer Sound has taken great care in material selection and component design. After manufacture, all load-critical system components are individually inspected.

All load ratings and other specifications given in this manual are the result of accepted engineering practice and careful testing. However, such specifications and ratings are subject to change. USERS SHOULD CHECK THE QUICKFLY SECTION OF THE MEYER SOUND WEBSITE AT

http://www.meyersound.com

OR CONTACT TECHNICAL SUPPORT AT REGULAR INTERVALS TO CHECK FOR UPDATED OR REVISED INFORMATION.

SAFE WORKING LOADS AND REGULATORY COMPLIANCE

The design and safe working load (SWL) ratings of the QuickFly system are intended to be in compliance with accepted industry practices within the United States. Unless otherwise specified, all working loads are based on either a 5:1 or 7:1 safety factor with respect to static load failure points. However, as noted above, there are wide variations internationally in the regulations and practices applying to suspension of sound systems in public places. Although acceptable safety factors in the United States are generally high, safety codes may impose even stricter requirements in some localities (such as those highly prone to earthquakes). In addition, applicable safety codes are open to interpretation: Government officials in one location may have a stricter interpretation than another local official, even when operating under the same regulations and in the same legal jurisdiction.

CONSEQUENTLY, USERS OF QUICKFLY RIGGING SYSTEMS SHOULD BE PREPARED TO TAKE ADDITIONAL SAFETY ASSURANCE MEASURES BEYOND THOSE OUTLINED IN THIS MANUAL. IN ALL CASES, IT IS THE RESPONSIBILITY OF THE USER TO MAKE CERTAIN THAT ANY MEYER SOUND LOUDSPEAKER SYSTEM IS SUSPENDED IN ACCORDANCE WITH ALL APPLICABLE NATIONAL/FEDERAL, STATE/PROVINCIAL, AND LOCAL REGULATIONS.

SAFETY RESPONSIBILITIES “ABOVE THE HOOK”

In most touring applications of rigging systems, the touring sound provider is normally responsible for ensuring the safety of the suspension system only below the attachment point. The safety and suitability of the attachment point is generally seen as the responsibility of the venue owner or operator. However, this distinction (“above the hook” versus “below the hook”) can be open to interpretation. Touring system operators should double-check to make certain that attachment points are approved and suitably load rated, and that the points used are those identified as such by the venue owner or operator. AS AN EXTRA PRECAUTION, CAREFUL INSPECTION OF THE ATTACHMENT POINTS IS ADVISED BEFORE FLYING, PARTICULARLY IN OLDER VENUES OR THOSE HOSTING FREQUENT EVENTS USING LARGE SOUND AND LIGHTING SYSTEMS. In any case, Meyer Sound QuickFly systems are intended only for suspension from approved rigging points, each known to have ample SWL margins for the system components suspended below them.

INSPECTION AND MAINTENANCE

The Meyer Sound QuickFly systems are an assembly of mechanical devices, and are therefore subject to wear and tear over prolonged use, as well as damage from corrosive agents, extreme impact, or inappropriate use.

BECAUSE OF THE SAFETY ISSUES INVOLVED, USERS MUST ADOPT AND ADHERE TO A SCHEDULE OF REGULAR INSPECTION AND MAINTENANCE. IN TOURING APPLICATIONS, KEY COMPONENTS MUST BE INSPECTED BEFORE EACH USE. Such inspection includes examination of all load-bearing components for any sign of undue wear, twisting, buckling, cracking, rusting, or other corrosion. In regard to rust and corrosion, the main components of a QuickFly system are either protected by an exterior coating or made from stainless steel, which is impervious to rust and resistant to most corrosive fluids. Nevertheless, normal use and shipping vibrations can wear through the protective coatings, and extremely corrosive fluids (such as battery acid) can cause severe damage with prolonged exposure even to protected parts. Particular attention should be given to screws, bolts, and other fasteners to make certain the fittings are tight and secure. Metal seams and welds should be examined for any sign of separation or deformation. Meyer Sound strongly recommends that written documentation be maintained on each QuickFly system, noting date of inspection, name of inspector, points of system checked, and any anomalies discovered.

Annual Comprehensive Examination and Test Program

In addition to routine checks on the road for touring systems, Meyer Sound also recommends a careful, comprehensive system examination and testing “at home” in the warehouse or other appropriate location at regular intervals. Such at home examinations and tests should occur at least once a year, and should include a careful inspection of each component under ideal lighting conditions, and then a final comprehensive check of the entire system after it has been flown.

If any anomalies or defects are discovered that could possibly affect the safety or integrity of the system, affected parts or subsystems should be replaced in their entirety before that part of the system is flown again.

REPLACEMENT PARTS

Any component found to be defective, or any safety-related component you even suspect might be defective, should be replaced with the equivalent, approved part. Parts specific to a QuickFly system should be ordered directly from Meyer Sound. No attempt should be made to substitute what appears to be equivalent or “mostly the same” generic replacements. Some parts used in QuickFly systems are identical to those used in other rigging applications. To the best of our knowledge, most of these suppliers are reputable and their products are reliable. However, Meyer Sound has no way of assuring the quality of products made by these various suppliers. Therefore, Meyer Sound is not responsible for problems caused by components that were not supplied by Meyer Sound.

TRAINING

QuickFly systems are relatively straightforward and easy to use. However, they should only be used by persons trained in the use of loudspeaker rigging systems who have mastered key points of assembly, rigging and flying. Users should read this manual in its entirety before attempting to deploy any QuickFly system. You may make additional copies of this manual as necessary for in-house use; copies may not be made for any other purpose.

2. 700-HP SUBWOOFER RIGGING COMPONENTS

MRK-700 RIGGING KIT

The MRK-700 rigging kit is required to attach the 700-HP ultrahigh-power subwoofer to the MTG-700 top grid. This optional rigging kit is available installed at the factory or as a field upgrade.

List of Contents: MRK-700 Rigging Kit (PN 40.137.006.01)			
	Qty	Part Number	Description
	4	45.137.006.01	MRB-700 rigging bars
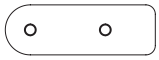	4	61.137.015.01	MAL-700 straight rigging links
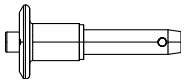	8	134.021	3/8" x 1.125" quick release pin (QRP)

The MRK-700 rigging kit utilizes rugged, straight rigging links and 3/8” x 1.125” QRPs to connect adjacent subwoofers in ground-stacked or flown array configurations.

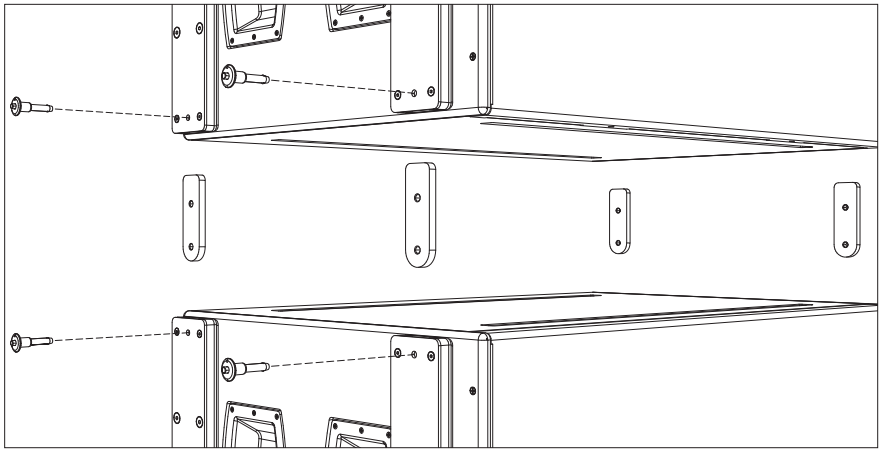

CAUTION: Use only MAL-700 straight rigging links when connecting two 700-HP subwoofers. Never use MTG-700 rigging links to connect 700-HP subwoofers.

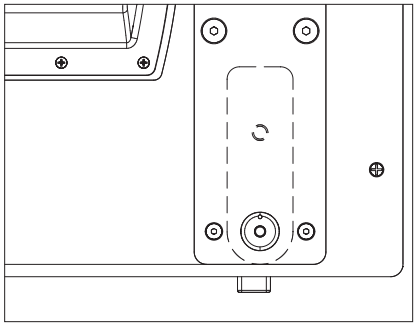

NOTE: Each of the four MAL-700 straight rigging links can be stowed for transport links in the bottom (deepest) cavities of the MRB-700 rigging bars attached to the 700-HP subwoofer. By leaving the top pins in place and keeping the links captive, the links and pins are always ready for use.

FIELD INSTALLATION OF THE MRK-700 RIGGING KIT

If the MRK-700 rigging kit was not fitted at the factory, it can easily be installed in the field with the following steps:

1. Using a 7/32" hex (or Allen) wrench, remove each of the 700-HP's four 3/8" x 2.5" black flathead socket bolts.
2. The orientation of the MRB-700 rigging bar is critical to the correct operation of the 700-HP subwoofer rigging. Position the bar so that:
   - The deepest bar cavity (approximately 6 inches in depth) is located at the bottom of the 700-HP cabinet and the shallowest bar cavity (approximately 2.75 inches) is located at the top of the cabinet.
   - The side of the bar with the gasket mounted to it is located to the inside.
3. Apply 1 to 2 drops of Loctite® to the threads of each flathead socket bolt.
4. Bolt each of the four flathead socket bolts through their holes in the rigging bar and into the 700-HP cabinet.

⚠ **CAUTION:** Ensure that the socket bolts are firmly secure but do not over-tighten them. Approximately 15 foot pounds of torque is recommended.

---

5. Repeat steps 1 through 4 above for each of the remaining rigging bars.

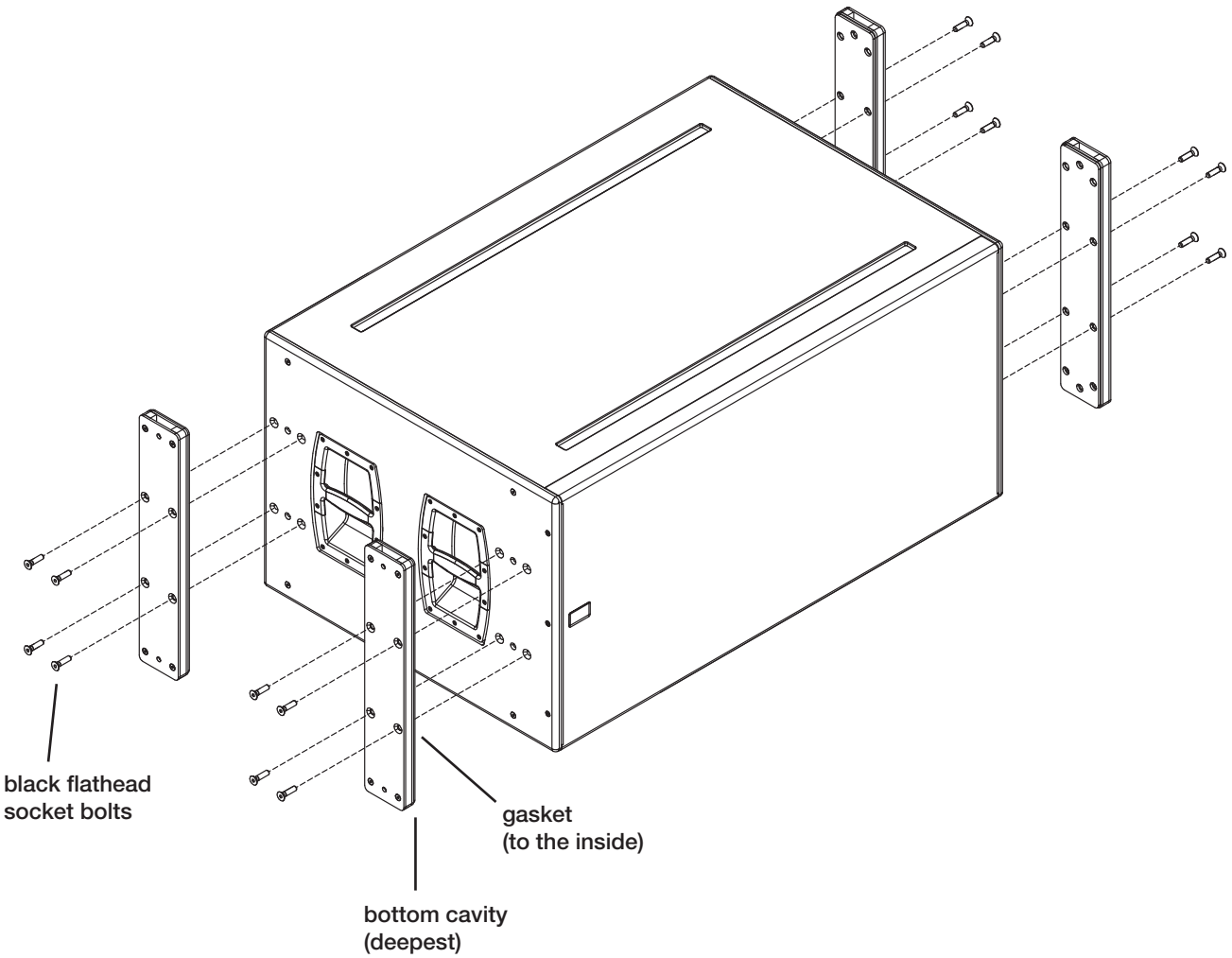

MTG-700 TOP GRID

The MTG-700 top grid is a very simple, straightforward solution for rigging 700-HP subwoofers, allowing multiple cabinets to be flown in a straight array. The MTG-700 top grid can accommodate a variety of different pickup configurations using its six pick-up points (three on each side of the frame).

List of Contents: MTG-700 Top Grid Assembly (PN 40.137.072.01)			
	Qty	Part Number	Description
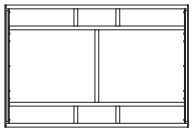	1	40.137.072.01	MTG-700 top grid assembly
	4	61.137.012.01	MTG-700 rigging link
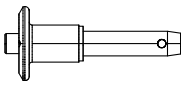	8	134.023	3/8" x 1.5" quick release pin (red button QRP)

MTG-700 Top Grid Dimensions:

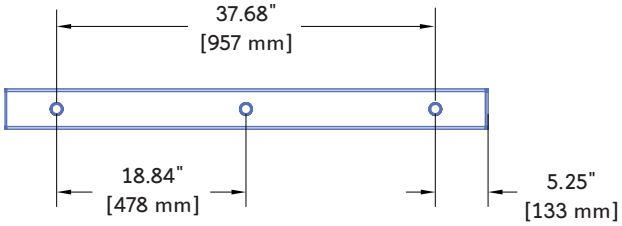

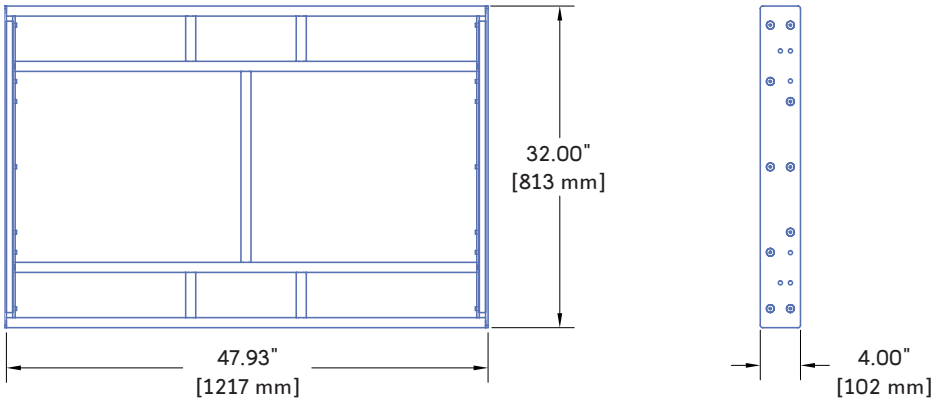

MTG-700 Top Grid Weight: 122 lbs (55.33 kg)

3. USING THE 700-HP SUBWOOFER WITH THE MTG-700 TOP GRID

The MTG-700 top grid allows you to fly 700-HP subwoofers simply and easily by using 4 MTG-700 rigging links (and their corresponding QRPs) for both connection to the grid and the individual subwoofers in the array.

Position each MTG-700 rigging link so that the single-holed end of the link connects to its corresponding MRB-700 rigging bar. The double-holed end connects to the MTG-700 top grid. Use three QRPs to secure each link as shown.

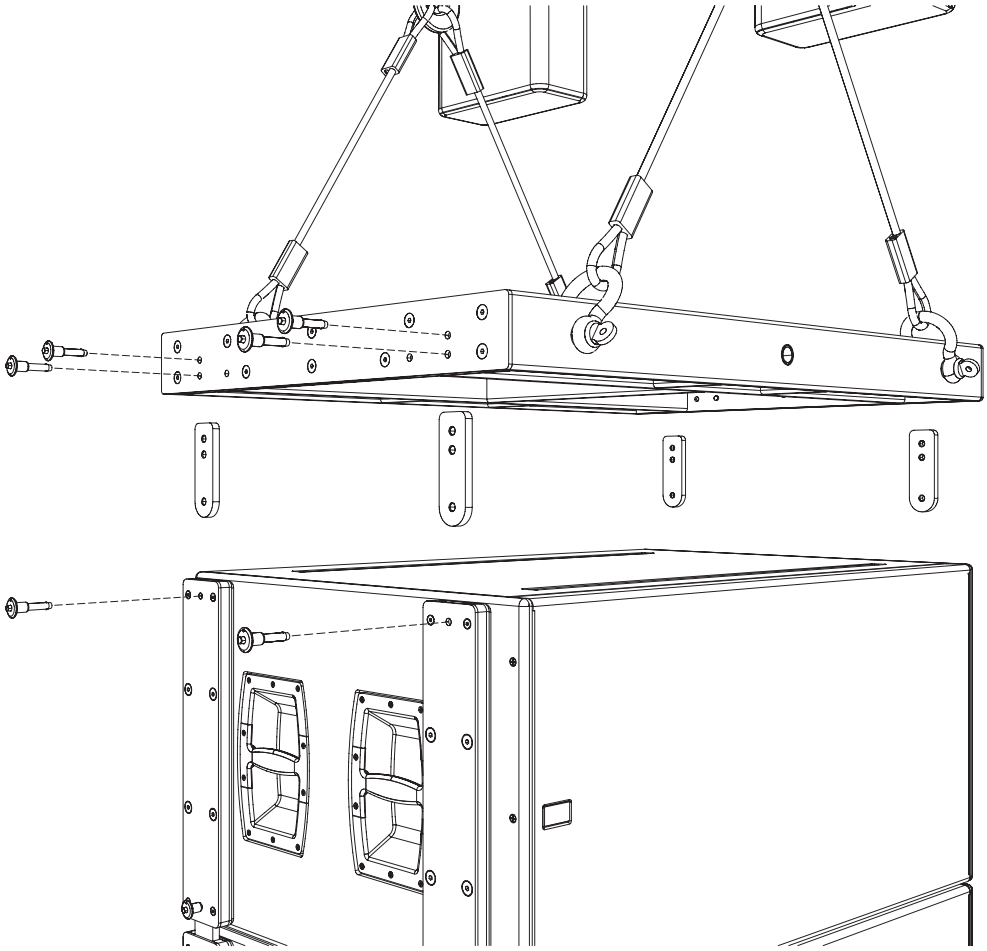

CAUTION: Use only MTG-700 rigging links with the MTG-700 top grid. Never use the standard MAL-700 straight rigging links when connecting a 700-HP subwoofer to the MTG-700 top grid.

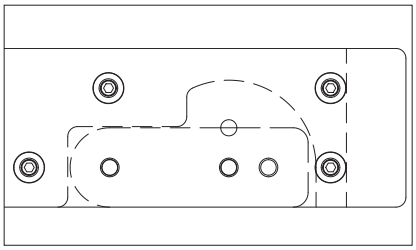

NOTE: For convenient storage, each of the four MTG-700 rigging links can be stowed in the MTG-700 top grid, and secured with the 3/8" x 1.5" QRPs.

LOAD RATINGS OVERVIEW

Considerations

All of the load ratings in this assembly guide take the following into consideration:

- The weight of the MTG-700 top grid itself has been included (122 lbs/55.33 kg).
- The maximum number of 700-HP subwoofers that may be hung is based on the 700-HP weight (when fitted with the optional MRK-700 rigging kit) of 259 lbs (117.48 kg).
- The load ratings and maximum weights allowed are based on using the MTG-700 grid and flown loudspeakers as a system, including links and pins. Thus, the maximum stress point could change from one element to another in the system.

Prerequisite Conditions

The following conditions must be met to achieve the load ratings shown in Tables 3.1 and 3.2:

- If a bridle is used between pick-up points on the MTG-700, the angle of the bridle at the apex is no greater than 90 degrees.
- There is a straight hang with no splay between speakers.
- The tilt of the grid must be no larger than the one achieved by the natural rotation of the array. The array is not pulled from points other than the ones on the MTG-700 top grid and no pull-back motor should be used for tilting the array.



NOTE: The load ratings in Table 3.1 apply when using one or two center points. In order to achieve the load ratings shown in Table 3.2, ALL four corner points must be used.



CAUTION: Using a bridle leg shorter than the recommended length for each configuration will reduce the load rating and may damage the MTG-700 grid.



CAUTION: Always use properly rated rigging hardware. The use of 3/4" shackles for the MTG-700 grid's pick-up points is recommended.

When flying an array of loudspeakers as discussed in this guide, the entire weight of the array can shift completely to either the front or back motor or set of motors; the degree of shift depends on the number of cabinets, and the angle of the MTG-700 grid. Accordingly, this guide rates the MTG-700 rigging system for the "worst case" loadings that can occur at the final trim of an array while maintaining a 5:1 or 7:1 safety factor. Configurations using angled bridles are shown with an angle at the apex of 90 degrees, resulting in the two angles between the bridle and MTG-700 grid at the prescribed bridle length (45 degrees each).

700-HP SYSTEM LOAD RATINGS AND PICKUP CONFIGURATIONS

Using one or both center pickup points

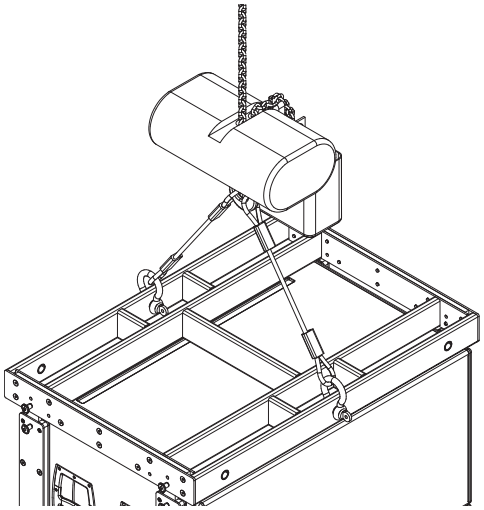

Figure 3.1. 2 to 1 center point configuration

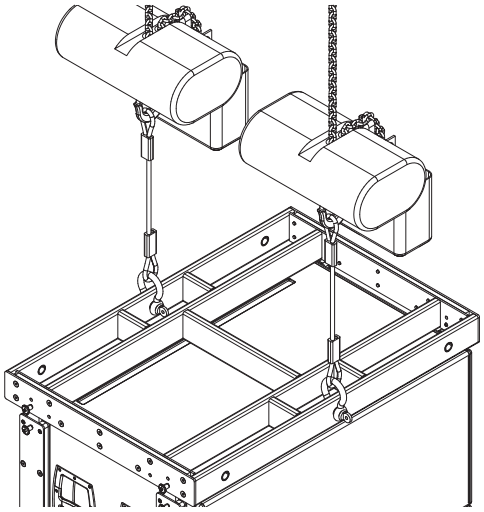

Figure 3.2. 2 to 2 center point configuration

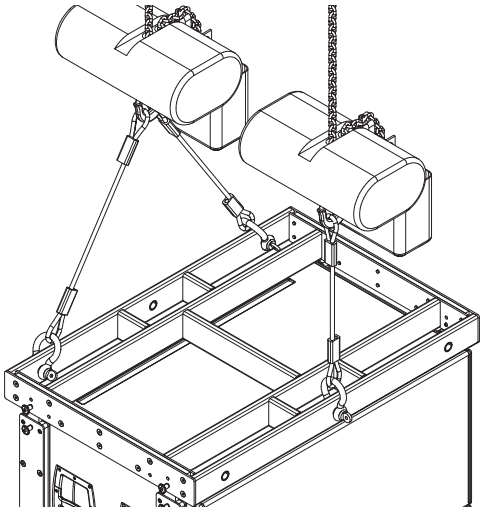

Figure 3.3. 3 to 2 center/corner point configuration

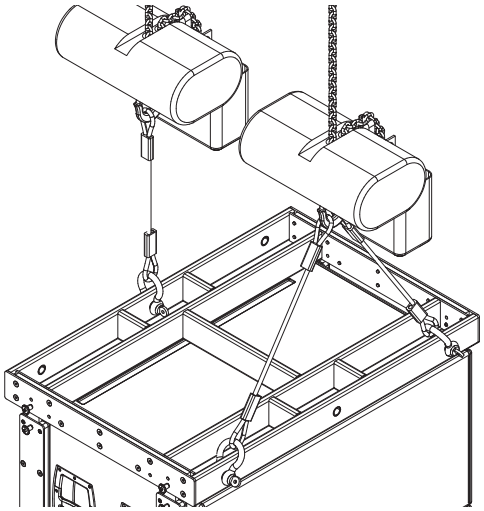

Figure 3.4. 3 to 2 corner/center point configuration

Table 3.1. Maximum Suspended Weight and Quantity of 700-HPs, Using Center Pickup Points

Grid Tilt in Degrees	Min. Bridle Leg Length	5:1 Safety Factor		7:1 Safety Factor	
		Max. Weight	Max. Quantity	Max. Weight	Max. Quantity
No Tilt	3 ft (915 mm)	3000 lbs (1361 kg)	**11**	2100 lbs (953 kg)	**8**

700-HP SYSTEM LOAD RATINGS AND PICKUP CONFIGURATIONS

Using all four corner pickup points

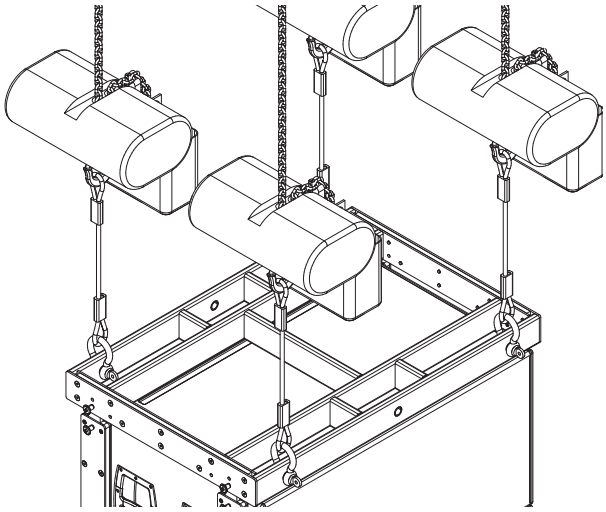

Figure 3.5. 4 to 4 corner point configuration

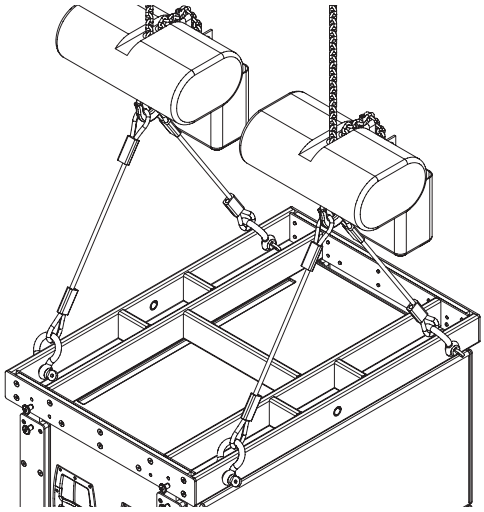

Figure 3.6. 4 to 2 corner point configuration

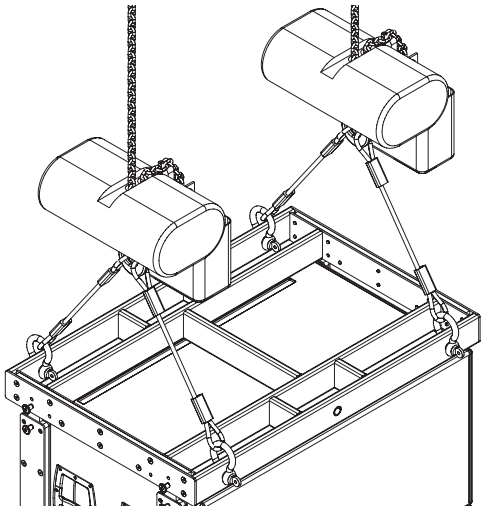

Figure 3.7. 4 to 2 corner cross point configuration

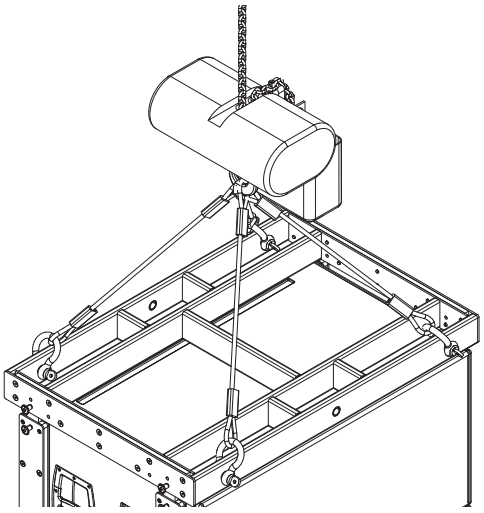

Figure 3.8. 4 to 1 corner point configuration

Table 3.2. Maximum Suspended Weight and Quantity of 700-HPs, Using Corner Pickup Points

Grid Tilt in Degrees	Min. Bridle Leg Length	5:1 Safety Factor		7:1 Safety Factor	
		Max. Weight	Max. Quantity	Max. Weight	Max. Quantity
See Note	3 ft (915 mm)	3500 lbs (1586 kg)	**13**	3000 lbs (1361 kg)	**11**

NOTE: The grid tilt should not be larger than the one achieved by the natural rotation of the array. The array should not be pulled from points other than the ones on the MTG-700 top grid and pull-back motors should not be used for tilting the array.

4. USING THE 700-HP SUBWOOFER WITH THE MCF-700 CASTER FRAME

MCF-700 CASTER FRAME

The heavy-duty MCF-700 caster frame (PN 40.137.002.01) is highly durable and easy to attach to a 700-HP ultrahigh-power subwoofer. When you're deploying and striking a 700-HP array, the MCF-700 caster frame can support the weight of the array, making it easy to assemble or disassemble by using blocks of up to three 700-HP subwoofers.

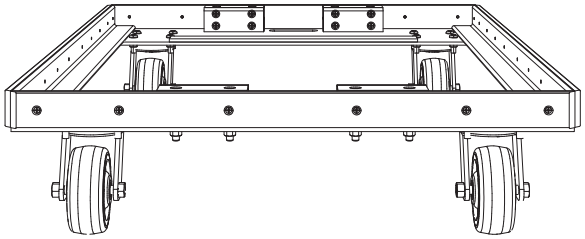

NOTE: The MCF-700 caster frame can be used with all versions of 700-HP subwoofers whether or not it is fitted with the MRK-700 rigging kit.

TThe MCF-700's rugged steel frame also allows use of a forklift. A range of protective transport covers is available.

CAUTION: When lifting a block with a forklift, always keep the forks wide – close to the MCF-700 caster frame's wheels. Doing otherwise (for example, moving the forks together in the center) may bend the frame or cause the stack to tip over.

In addition to transport, the MCF-700 frame supports 700-HP subwoofers in a ground-stacked configuration.

CAUTION: Do not exceed three 700-HP subwoofers high on a block to avoid tipping over the stack.

NOTE: For safety reasons and to avoid any damage to the enclosures, use straps (as shown in the figure at right) when transporting a stack, especially if the cabinets are not fitted with the MRK-700 rigging kit. The MCF-700 includes slots on the sides for this purpose.

TIP: You can also transport the MTG-700 top grid attached to the top 700-HP on a stack.

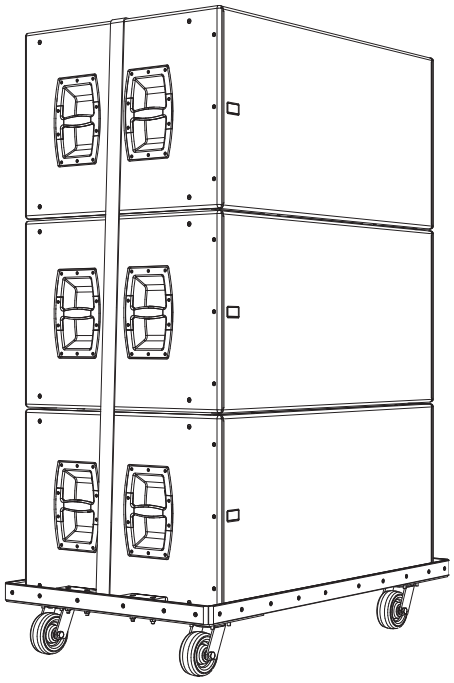

CAUTION: When using the MCF-700 caster frame to ground-stack 700-HP subwoofers, make sure all four caster wheels are blocked to prevent the stack from rolling away.



Meyer Sound Laboratories Inc.
2832 San Pablo Avenue
Berkeley, CA 94702

www.meyersound.com
T: +1 510 486.1166
F: +1 510 486.8356

© 2006
Meyer Sound Laboratories Inc.
PN: 05.137.072.01 C