# 600-HP Compact High-Power Subwoofer



***Keep these important operating instructions.***
***Check www.meyersound.com for updates.***

## DECLARATION OF CONFORMITY ACCORDING TO ISO/IEC GUIDE 22 AND EN 45014

**Manufacturer's Name:**
Meyer Sound Laboratories Inc.

**Manufacturer's Address:**
2832 San Pablo Avenue
Berkeley, CA 94702-2204, USA

Declares that the products
**Product Name:** 600-HP
**Product Options:** All

Conforms to the following Product Specifications

| | |
|---|---|
| Safety: | IEC 60065: 2002 |
| | BS EN 60065: 2002 |
| | CSA C22.2 60065: 2003 |
| | UL 813: 1999 |
| EMC: | EN 55103-1: 1997 emission(1) |
| | EN 55103-2: 1997 immunity(2) |

This device complies with EN 55103-1 & -2. Operation is subject to the following two conditions:

(1) this device may not cause harmful interference, and
(2) this device must accept any interference received, including interference that may cause undesired operation.

**Supplementary Information**

The product herewith complies with the requirements of the Low Voltage Directive 73/23/EEC and the EMC Directive 89/336/EEC.

**Office of Quality Manager**
**Berkeley, California USA**
**April 15, 2006**

European Contact: Your local Meyer Sound dealer or Meyer Sound Germany, GmbH. Carl Zeiss Strasse 13, 56751 Polch, Germany. Telephone: 49.2654.9600.58 Fax: 49.2654.9600.59

**Environmental specifications for Meyer Sound Electronics products**

| | |
|---|---|
| Operating Temperature | 0˚ C to +45˚ C |
| Non operating Temperature | <-40˚ C or > +75˚ C |
| Humidity | to 95% at 35˚ C |
| Operating Altitude | to 4600 m (15,000 ft) |
| Non operating Altitude | to 6300 m (25,000 ft) |
| Shock | 30 g 11 msec half-sine on each of 6 sides |
| Vibration | 10 Hz to 55 Hz (0.010 m peak-to-peak excursion) |

Made by Meyer Sound Laboratories
Berkeley, California USA
European Office:
Meyer Sound Lab. GmbH
Carl Zeiss Strasse 13
56751 Polch, Germany

3K59 COMMERCIAL AUDIO SYSTEM
US LISTED

N775

© 2006 Meyer Sound. All rights reserved.
600-HP Compact High-Power Subwoofer Operating Instructions

The contents of this manual are furnished for informational purposes only, are subject to change without notice, and should not be construed as a commitment by Meyer Sound Laboratories Inc. Meyer Sound assumes no responsibility or liability for any errors or inaccuracies that may appear in this manual. Except as permitted by applicable copyright law, no part of this publication may be reproduced, stored in a retrieval system, or transmitted, in any form or by any means, electronic, mechanical, recording or otherwise, without prior written permission from Meyer Sound.

600-HP, MICA, Intelligent AC, RMS, Galileo, Compass, MAPP Online Pro, GuideALink, and all alpha-numeric designations for Meyer Sound products and accessories are trademarks of Meyer Sound. Meyer Sound, TruPower, SIM and QuickFly are registered trademarks of Meyer Sound Laboratories Inc. (Reg. U.S. Pat. & Tm. Off.). All third-party trademarks mentioned herein are the property of their respective trademark holders.

Printed in the U.S.A.

Part Number: 05.149.005.01 A

## SYMBOLS USED

These symbols indicate important safety or operating features in this booklet and on the chassis:

|  |  | 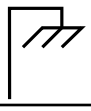 |  |
|---|---|---|---|
| Dangerous voltages: risk of electric shock | Important operating instructions | Frame or chassis | Protective earth ground |
| Pour indiquer les risques résultant de tensions dangereuses | Pour indequer important instructions | Masse, châssis | Terre de protection |
| Zu die gefahren von gefährliche spanning zeigen | Zu wichtige betriebs-anweisung und unter-haltsanweisung zeigen | Rahmen oder chassis | Die schutzerde |
| Para indicar voltajes peligrosos. | Instrucciones importantes de funcionamiento y/o manteniento | Armadura o chassis | Tierra proteccionista |

## IMPORTANT SAFETY INSTRUCTIONS

1. Read these instructions.
2. Keep these instructions.
3. Heed all warnings.
4. Follow all instructions.
5. Do not use this loudspeaker near water.
6. Clean only with dry cloth.
7. Do not block any ventilation openings. Install in accordance with Meyer Sound's installation instructions.
8. Do not install near any heat sources such as radiators, heat registers, stoves, or other apparatus that produce heat.
9. Do not defeat the safety purpose of the grounding-type plug. A grounding-type plug has two blades and a third grounding prong. The third prong is provided for your safety. If the provided plug does not fit into your outlet, consult an electrician for replacement of the obsolete outlet.
10. Protect the power cord from being walked on or pinched, particularly at plugs, convenience receptacles, and the point where they exit from the loudspeaker. The AC mains plug or appliance coupler shall remain readily accessible for operation.
11. Only use attachments/accessories specified by Meyer Sound.
12. Use only with the caster rails or rigging specified by Meyer Sound, or sold with the loudspeaker. Handles are for carrying only.



**CAUTION:** Rigging should only be done by experienced professionals.

13. Unplug this loudspeaker during lightning storms or when unused for long periods of time.
14. Refer all servicing to qualified service personnel. Servicing is required when the loudspeaker has been damaged in any way, such as when the power-supply cord or plug has been damaged; liquid has been spilled or objects have fallen into the loudspeaker; rain or moisture has entered the loudspeaker; the loudspeaker has been dropped; or when, for undetermined reasons, the loudspeaker does not operate normally.

# SAFETY SUMMARY

## English

- To reduce the risk of electric shock, disconnect the loudspeaker from the AC mains before installing audio cable. Reconnect the power cord only after making all signal connections.
- Connect the loudspeaker to a two-pole, three-wire grounding mains receptacle. The receptacle must be connected to a fuse or circuit breaker. Connection to any other type of receptacle poses a shock hazard and may violate local electrical codes.
- Do not install the loudspeaker in wet or humid locations without using weather protection equipment from Meyer Sound.
- Do not allow water or any foreign object to get inside the loudspeaker. Do not put objects containing liquid on or near the unit.
- To reduce the risk of overheating the loudspeaker, avoid exposing it to direct sunlight. Do not install the unit near heat-emitting appliances, such as a room heater or stove.
- This loudspeaker contains potentially hazardous voltages. Do not attempt to disassemble the unit. The unit contains no user-serviceable parts. Repairs should be performed only by factory-trained service personnel.

## Français

- Pour réduire le risque d'électrocution, débrancher la prise principale de l'haut-parleur, avant d'installer le câble d'interface allant à l'audio. Ne rebrancher le bloc d'alimentation qu'après avoir effectué toutes les connections.
- Branchez l'haut-parleur dans une prise de courant à 3 dérivations (deux pôles et la terre). Cette prise doit être munie d'une protection adéquate (fusible ou coupe-circuit). Le branchement dans tout autre genre de prise pourrait entraîner un risque d'électrocution et peut constituer une infraction à la réglementation locale concernant les installations électriques.
- Ne pas installer l'haut-parleur dans un endroit où il y a de l'eau ou une humidité excessive.
- Ne pas laisser de l'eau ou tout objet pénétrer dans l'haut-parleur. Ne pas placer de r´cipients contenant un liquide sur cet appareil, ni à proximité de celui-ci.
- Pour éviter une surchauffe de l'haut-parleur, conserver-la à l'abri du soleil. Ne pas installer à proximité d'appareils dégageant de la chaleur tels que radiateurs ou appareils de chauffage.
- Ce haut-parleur contient des circuits haute tension présentant un danger. Ne jamais essayer de le démonter. Il n'y a aucun composant qui puisse être réparé par l'utilisateur. Toutes les réparations doivent être effectuées par du personnel qualifié et agréé par le constructeur.

## Deutsch

- Um die Gefahr eines elektrischen Schlages auf ein Minimum zu reduzieren, den Lautsprecher vom Stromnetz trennen, bevor ggf. ein Audio-Schnittstellensign alkabel angeschlossen wird. Das Netzkabel erst nach Herstellung aller Signalverbindungen wieder einstecken.
- Der Lautsprecher an eine geerdete zweipolige Dreiphasen-Netzsteckdose anschließen. Die Steckdose muß mit einem geeigneten Abzweigschutz (Sicherung oder Leistungsschalter) verbunden sein. Der Anschluß der unterbrechungsfreien Stromversorgung an einen anderen Steckdosentyp kann zu Stromschlägen führen und gegen die örtlichen Vorschriften verstoßen.
- Der Lautsprecher nicht an einem Ort aufstellen, an dem sie mit Wasser oder übermäßig hoher Luftfeuchtigkeit in Berührung kommen könnte.
- Darauf achten, daß weder Wasser noch Fremdkörper in das Innere den Lautsprecher eindringen. Keine Objekte, die Flüssigkeit enthalten, auf oder neben die unterbrechungsfreie Stromversorgung stellen.
- Um ein Überhitzen dem Lautsprecher zu verhindern, das Gerät vor direkter Sonneneinstrahlung fernhalten und nicht in der Nähe von wärmeabstrahlenden Haushaltsgeräten (z.B. Heizgerät oder Herd) aufstellen.
- Im Inneren diesem Lautsprecher herr-schen potentiell gefährliche Spannungen. Nicht versuchen, das Gerät zu öffnen. Es enthält keine vom Benutzer reparierbaren Teile. Reparaturen dürfen nur von ausgebildetem Kundenienstpersonal durchgeführt werden.

## Español

- Para reducir el riesgo de descarga eléctrica, desconecte de la red de voltaje el altoparlante antes de instalar el cable de señal de audio. Vuelva a conectar la alimentacion de voltaje una vez efectuadas todas las interconexiones de señalizacion de audio.
- Conecte el altoparlante a un tomacorriente bipolar y trifilar con neutro de puesta a tierra. El tomacorriente debe estar conectado a la protección de derivación apropiada (ya sea un fusible o un disyuntor). La conexión a cualquier otro tipo de tomacorriente puede constituir peligro de descarga eléctrica y violar los códigos eléctricos locales.
- No instale el altoparlante en lugares donde haya agua o humedad excesiva.
- No deje que en el altoparlante entre agua ni ningún objeto extraño. No ponga objetos con líquidos encima de la unidad ni cerca de ella.
- Para reducir el riesgo de sobrecalentamiento, no exponga la unidad a los rayos directos del sol ni la instale cerca de artefactos que emiten calor, como estufas o cocinas.
- Este altoparlante contiene niveles de voltaje peligrosos en potencia. No intente desarmar la unidad, pues no contiene piezas que puedan ser repardas por el usuario. Las reparaciones deben efectuarse únicamente por parte del personal de mantenimiento capacitado en la fábrica.

# CONTENTS


**INTRODUCTION** 1

How to Use this Manual 1

**CHAPTER 1: Introducing the 600-HP Compact High-Power Subwoofer** 3

High Power and High Performance 3
Versatile Configuring and Rigging 3
Features & Benefits 4
Applications 4

**CHAPTER 2: Power Requirements** 5

AC Power 5
Voltage Requirements 5
AC Power Distribution 5
Current Requirements 6
Power Connector Wiring Conventions 7
Electrical Safety Issues 8

**CHAPTER 3: Amplification and Audio** 9

Audio Input 9
600-HP Interconnections 10
Cabling 10
600-HP Limiting 10
600-HP Amplifier Cooling System 11

**CHAPTER 4: RMS™ Remote Monitoring System (Optional)** 13

Understanding the RMS Communication Module's User Panel 13
Service LED (Red) 13
Service Button 14
Wink LED (green) 14
Reset Button 14
Activity LED (Green) 14
User Interface 14

**CHAPTER 5: System Integration** 15

Using 600-HP Subwoofers with Other Meyer Sound loudspeakers 15
Subwoofer Placement 15
600-HP Used with MICA™ Curvilinear Array Loudspeakers 15
600-P Used with Concert and UltraSeries Loudspeakers 16
Daisy-Chained 16
Adding an LD-1A/LD-2 Line Driver 16
Using the LD-1A/LD-2's Lo-Cut Filter 16
Adding an LD-3 Compensating Line Driver 17
Using the Galileo™ 616 Loudspeaker Management System 17
Digital Signal Processors 17

**CHAPTER 6: System Design and Integration Tools** 19

MAPP Online Pro™ 19
SIM® Measurement System 20
Source Independent Measurement Technique 20
Applications 20

**CHAPTER 7: QuickFly® Rigging and Ground-stacking 21**

Flying the 600-HP Subwoofer 21
GuideALink™ Rigging Frame 21
600-HP to 600-HP 22
Flown 22
Ground-stacked 22
600-HP to MICA 22
Flown 22
Ground-stacked 23
The MG-MICA Multipurpose Grid 24
Flown Configuration 24
Ground-Stacked Configuration 25
The Optional MDTL-MICA Downtilt Link 25
MCF-MICA Caster Frame 25
MDB-600 Dolly Board 27

**APPENDIX A: Amplifier Replacement and Optional Rain Hood 29**

Using the Rain Hood (Weather-Protected Loudspeakers) 29
Removing the HP-2/600 Amplifier 29
Replacing the HP-2/600 Amplifier 29

**APPENDIX B: 600-HP Specifications 31**

# INTRODUCTION TO THIS MANUAL

These operating instructions provide important information about the form, features, function, and specifications of the 600-HP high-power subwoofer. In addition to power requirements and audio characteristics, fundamental system design, useful software tools, and array configurations for the 600-HP are discussed.

**Chapter 1: Introduction** provides a general description of the 600-HP and its capabilities and functionality.

**Chapter 2: Power Requirements** discusses power distribution, voltage and current requirements, as well as electrical safety issues.

**Chapter 3: Amplification and Audio** will help you understand and harness the power of the 600-HP amplifier and audio systems. Amplifier specifications, connectivity, limiting, and cooling system components are all covered.

**Chapter 4: RMS™ Remote Monitoring System (Optional)** introduces you to the optional communication RMS module, which can be installed in the 600-HP's amplifier to make use of Meyer Sound's RMS remote monitoring system.

**Chapter 5: System Integration** will walk you through the integration of the 600-HP in mid-high or full-range systems also discusses the options available for positioning and ground-stacking the 600-HP subwoofer.

**Chapter 6: System Design and Integration Tools** introduces two comprehensive tools, MAPP Online Pro™ and SIM® 3, for assisting you with the acoustical and functional requirements of system design and optimization.

**Chapter 7: QuickFly® Rigging** discusses the options available for suspending and ground-stacking the 600-HP subwoofer.

**Appendix A: Amplifier Replacement and Optional Rain Hood** discusses the procedure for replacing the 600-HP amplifier and rain hood.

**Appendix B: Specifications** includes a full list of specifications for the 600-HP, along with dimensional drawings.

## HOW TO USE THIS MANUAL

As you read this manual, you'll find figures and diagrams to help you understand and visualize what you're reading. You'll also find numerous icons that serve as cues to flag important information or warn you against improper or potentially harmful activities. These icons include:

A **NOTE** identifies an important or useful piece of information relating to the topic under discussion.

A **TIP** offers a helpful tip relevant to the topic at hand.

A **CAUTION** gives notice that an action can have serious consequences and could cause harm to equipment or personnel, delays, or other problems.

Information and specifications are applicable as of the date of this printing. Updates and supplementary information are posted on the Meyer Sound Web site at:

www.meyersound.com

You may contact Meyer Sound Technical Support at:

Tel: +1 510 486.1166

Fax: +1 510 486.8356

Email: techsupport@meyersound.com

# CHAPTER 1: INTRODUCING THE 600-HP SUBWOOFER

The 600-HP is a self-powered, high-output subwoofer that may be used in both flown and ground-stacked configurations. It is designed to rig directly with MICA™ compact high-power curvilinear array loudspeakers when fitted with the optional QuickFly MRF-600 rigging frame. The versatility of the 600-HP also allows it to be used with a variety of other Meyer Sound self-powered loudspeakers — such as M'elodie, CQ-1, CQ-2, UPA-1P, UPA-2P, and UPJ-1P — in fixed and touring applications.



*Figure 1.1. 600-HP compact high-power subwoofer*

## HIGH POWER AND HIGH PERFORMANCE

The system features two specially designed high-power 15-inch cone drivers, engineered to provide optimal performance in subwoofer applications. The high-excursion, back-vented drivers have 4-inch voice coils, and each is rated to handle 1200 watts (AES*). Each cone driver is driven by a channel of the integral two-channel class AB/H amplifier with complementary MOSFET output stages.

Total output power is 2250 watts (4500 watts peak), and the operating frequency range is from 36 Hz to 150 Hz, with a peak SPL of 138 dB. An amplifier with integral signal processing and driver protection is integrated into a field-replaceable module mounted in the rear of the enclosure.

The RMS remote monitoring system — standard with the rigging version and optional on other configurations — allows comprehensive monitoring of system parameters on a Windows®-based network.

**Power handling is measured under AES standard conditions: transducer driven continuously for two hours with band-limited noise signal having a 6 dB peak-average ratio.*

## VERSATILE CONFIGURING AND RIGGING

The 600-HP is available for fixed installations or portable applications; all versions include rugged plastic skids on the bottom of the unit to ensure secure stacking and prevent damage to the enclosure.

The three available side-panel options are:

- MRF-600 rigging frame
- Panels with handles
- Blank panels with no handles



*Figure 1.2. Side-panel options*

When fitted with the optional QuickFly MRF-600 rigging frame, the 600-HP is designed to rig directly with the MICA compact, high-power curvilinear array loudspeakers.

The optional MRF-600 rigging frame uses captive, rigid GuideALinks™. A slot and convenient pinned handle allow the links to be moved and pinned for arraying or storage. The 600-HP can make use of the optional MG-MICA rigging grid for flown and stacked configurations.



*Figure 1.3. Flown array with MICA loudspeakers and 600-HP subwoofers*



*Figure 1.4. Ground-stack with MICA loudspeakers and 600-HP subwoofers*

The 600-HP can securely travel in stacks using the MCF-MICA when fitted with MRF-600 frames or using the MDB-600 dolly board. The dimensions of the 600-HP are suitable for both European and U.S. trucks

Other options for the 600-HP include weather protection and custom color finishes for fixed installations and other applications requiring specific cosmetics.



*Figure 1.5. In transport on MCF-MICA caster frame*

## FEATURES & BENEFITS

- Efficient, high-power, high-excursion cone drivers
- Extremely low distortion for low-frequency clarity
- Very high peak power yields excellent transient reproduction
- Stackable, and flyable by itself or with MICA full-range loudspeakers
- Compatible with MG-MICA rigging frame for flying and ground-stacking
- Transportable in stacks using optional MCF-MICA caster frame or MDB-600 dolly board
- Low-frequency complement to MICA and other Meyer Sound self-powered loudspeakers

## APPLICATIONS

- Medium to large theatres and clubs
- Houses of worship
- Portable and installed A/V systems

# CHAPTER 2: POWER REQUIREMENTS

Self-powered and highly portable, the 600-HP subwoofer incorporates advanced loudspeaker technology with equally advanced power capabilities. Understanding the 600-HP subwoofer's power distribution, voltage and current requirements, as well as electrical safety issues, is critical to the safe and correct operation and deployment of the 600-HP subwoofer.

## AC POWER

When AC power is applied to the 600-HP subwoofer, the Intelligent AC™ power supply automatically selects the cor-rect operating voltage, allowing the 600-HP subwoofer to be used internationally without manually setting voltage switches. The Intelligent AC power supply performs the following protective functions to compensate for hostile conditions on the AC mains:

- Suppresses high-voltage transients up to several kilovolts
- Filters common mode and differential mode radio frequencies (EMI)
- Sustains operation temporarily during low-voltage periods
- Provides soft-start power-up, eliminating high inrush current

## VOLTAGE REQUIREMENTS

The 600-HP subwoofer operates safely and without audio discontinuity if the AC voltage stays within either of two operating ranges at 50 or 60 Hz:

- 85 to 134 volts
- 165 to 264 volts

The 600-HP subwoofer can withstand continuous voltages up to 275 volts and allows any combination of voltage to GND (that is neutral-line-ground or line-line-ground).

**CAUTION:** Continuous voltages higher than 275 volts can damage the unit.

**TIP:** Since the 600-HP subwoofer does not require a dedicated Neutral, and it can tolerate elevated voltages from ground, it can be connected between Line-Line terminals in a 120 V 3-phase Wye system. This results in 208 V AC between lines (nominal) and will therefore draw less current for the same output power compared to operating the subwoofer from 120 V AC (Line-Neutral). Make sure that the voltage remains within the 600-HP subwoofer's recommended operating window (180 V AC to 250 V AC). The Ground terminal must always be used for safety and the Line to Ground voltage should never exceed 250 V AC (typically there will be 120 V AC from Line to Ground in the above example).

The 600-HP subwoofer uses a NEMA L6-20P, an IEC 309 male power connector, a PowerCon connector, or a multi-pin VEAM connector and complies with worldwide product safety standards.

## AC POWER DISTRIBUTION

All amplifier modules and directly associated audio equipment (mixing consoles, processors, etc.) must be properly connected to the AC power distribution, preserving AC line polarity and connecting earth ground such that all grounding points are connected to a single node or common point using the same cable gauge as the neutral and line(s) cable(s).

Improper grounding connections between loudspeakers and the rest of the audio system may produce noise, hum and/or serious damage to the input/output stages in the system's electronic equipment.

**CAUTION:** Before applying AC to any Meyer Sound self-powered loudspeaker, be sure that the voltage potential difference between neutral and earth ground is less than 5 V AC.

Figure 2.1 shows a sample three-phase AC distribution system, with the load between loudspeakers distributed among the three phases and all of the loudspeakers connected to common neutral and earth ground points.

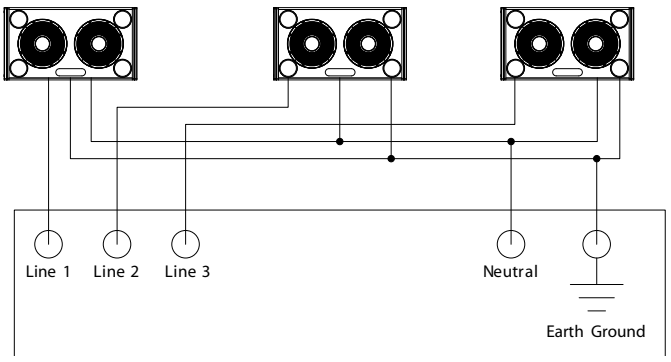


*Figure 2.1. A sample AC power distribution block diagram*

**NOTE:** Refer to Appendix B for details on the 600-HP's AC voltage requirements.

After applying AC power, the proper operating voltage is automatically selected, but the system is muted. During the next three seconds the following events occur:

1. The primary fan turns on.
2. The main power supply slowly ramps on.
3. The green Active LED on the user panel lights up, indicating that the system is enabled and ready to pass audio signals.

**CAUTION:** If the Active LED does not illuminate or the system does not respond to audio input after 10 seconds, remove AC power immediately. Verify that the voltage is within the proper range. If the problem persists, please contact Meyer Sound or an authorized service center.

If voltage drops below the lower boundary of either safe operating range (brownout), the 600-HP subwoofer uses stored energy to continue functioning briefly, and shuts down only if voltage does not rise above the lower boundary before the subwoofer's storage circuits are depleted. How long the 600-HP subwoofer will continue to function during brownout depends on the amount of voltage drop and the audio source level during the drop.

If the voltage increases above the upper boundary of either range, the power supply rapidly turns off, preventing damage to the unit.

**NOTE:** If voltage fluctuates within either operating range, automatic tap selection stabilizes the internal operating voltage. This tap selection is instantaneous, and there are no audible artifacts.

If the 600-HP subwoofer shuts down due to either low or high voltage, its power supply automatically turns on again after three seconds if the voltage has returned to either normal operating range. If the 600-HP subwoofer does not turn back on after 10 seconds, remove AC power immediately (see above Caution).

**NOTE:** It is recommended that the supply be operated in the rated voltage ranges at least a few volts away from the turn on/off points. This ensures that AC voltage variations from the service entry — or peak voltage drops due to long cable runs and/or insufficient gauge cable — do not cause the amplifier to cycle on and off.

## CURRENT REQUIREMENTS

The 600-HP subwoofer presents a dynamic load to the AC mains, which causes the amount of current to fluctuate between quiet and loud operating levels. Since different cables and circuit breakers heat up at varying rates, it is essential to understand the types of current ratings and how they correspond to circuit breaker and cable specifications.

The maximum long-term continuous current is the maximum rms current during a period of at least 10 seconds. It is used to calculate the temperature increase in cables in order to select a cable size and gauge that conforms to electrical code standards. It is also used to select the rating for slow-reacting thermal breakers.

The burst current is the maximum rms current during a period of approximately one second, used to select the rating of most magnetic breakers and to calculate the peak voltage drop in long AC cables according to the formula:

V pk (drop) = I pk x R (cable total)

The ultimate short-term peak current is used to select the rating of fast-reacting magnetic breakers.

Use Table 2.1 below as a guide when selecting cable gauge size and circuit breaker ratings for your operating voltage.

**Table 2.1. Current Ratings for the 600-HP Subwoofer**

| Current Draw | 115 V AC | 230 V AC | 100 V AC |
|---|---|---|---|
| Idle current | 0.64 A rms | 0.32 A rms | 0.85 A rms |
| Max. long-term continuous | 8.8 A rms | 4.4 A rms | 10 A rms |
| Burst current | 19 A rms | 9.5 A rms | 22 A rms |
| Ultimate short-term peak | 39 A pk | 20 A pk | 45 A pk |

**NOTE:** For best performance, the AC cable voltage drop should not exceed 10 volts, or 10 percent at 115 volts and 5 percent at 230 volts. Make sure that even with the AC voltage drop the AC voltage always stays in the operating windows.

**NOTE:** The minimum electrical service amperage required by the 600-HP subwoofer system is the sum of each loudspeaker's maximum long-term continuous current. An additional 30 percent above the minimum amperage is recommended to prevent peak voltage drops at the service entry.

**CAUTION:** In the unlikely event that the circuit breakers on the user panel trip (the white center buttons pop out), disconnect the AC power cable. Do not reset the breakers with the AC connected. Contact Meyer Sound for repair information.

## POWER CONNECTOR WIRING CONVENTIONS

The 600-HP subwoofer requires a grounded outlet. It is very important that the system be properly grounded in order to operate safely and properly. Figures 2.2, 2.3, 2.4, and 2.5 illustrate correct wiring for the creation of power cables and distribution systems.

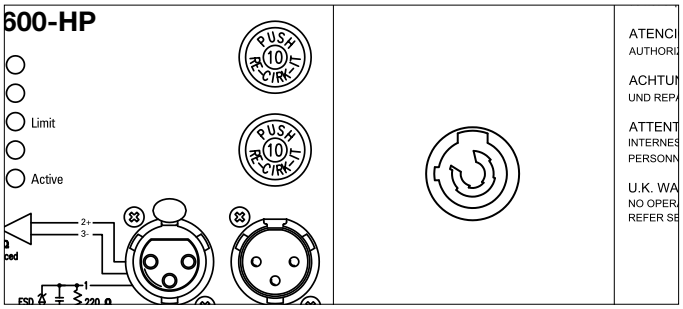


*Figure 2.2. The 600-HP subwoofer rear panel with PowerCon connector*

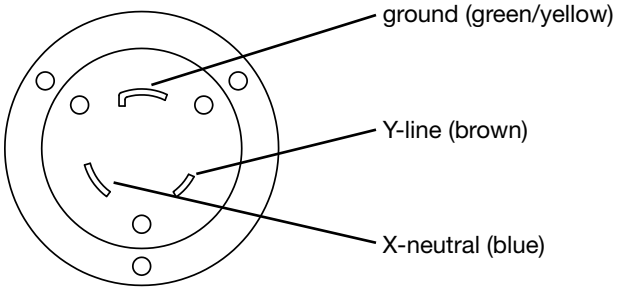


*Figure 2.3. NEMA L6-20 power connector pin-out*

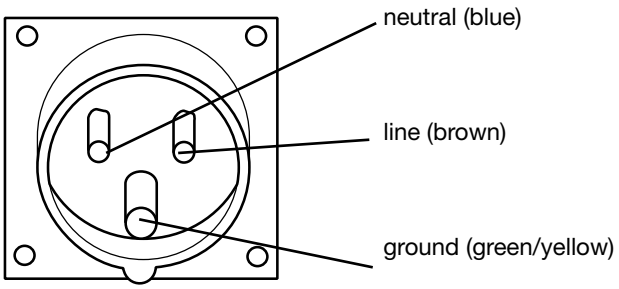


*Figure 2.4. IEC 309 power connector pin-out*

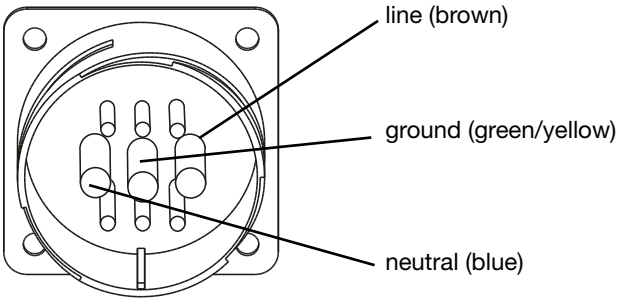


*Figure 2.5. VEAM multi-pin connector power pin-out*

If your 600-HP subwoofer is fitted with the VEAM multi-pin connector, see the Meyer Sound document VEAM Cable Wiring Reference (part number 06.033.113) for the wiring conventions and pin-outs for AC, audio, and RMS connections.

Meyer Sound offers the VIM-3 (VEAM interface module) to distribute power, audio, and RMS to 600-HP subwoofers fitted with VEAM connectors, as shown in Figure 2.6.

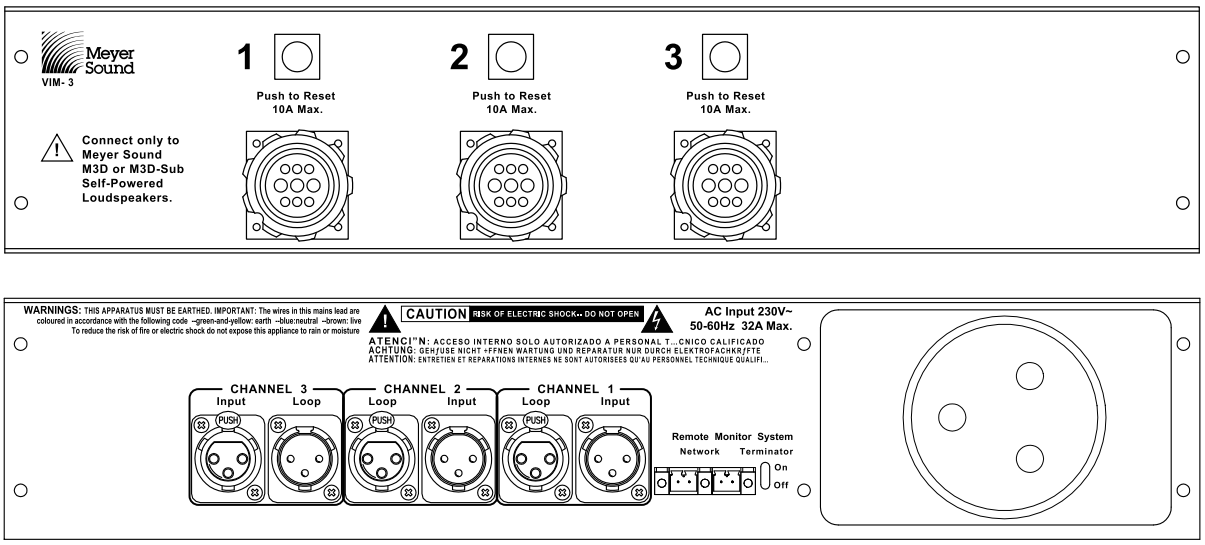


*Figure 2.6. VIM-3 module, front (top) and rear (bottom)*

## ELECTRICAL SAFETY ISSUES

Pay close attention to these important electrical and safety issues.

**CAUTION:** Do not use a power cord adapter to drive the 600-HP subwoofer from a standard three-prong Edison outlet since that connector is rated for only 15 amps (NEMA 5-15R; 125 V AC max.).

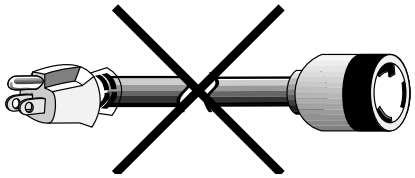

**CAUTION:** The 600-HP subwoofer requires a ground connection. Always use a grounded outlet and plug.




**TIP:** Use the ring located on rear of the 600-HP subwoofer to provide strain relief for power and signal cables. Do not use this ring for any other purpose.

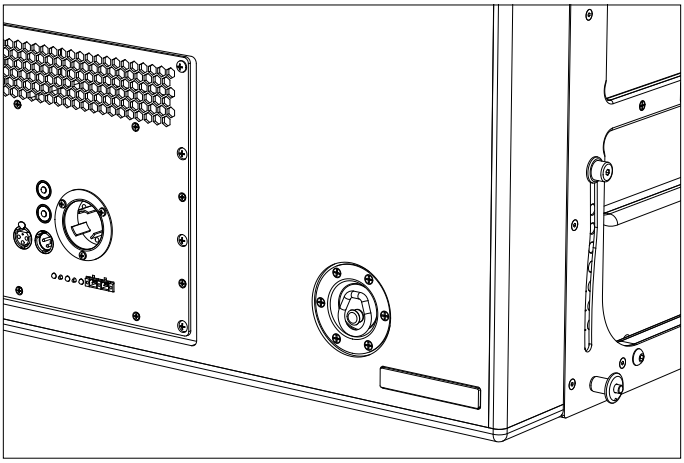

# CHAPTER 3: AMPLIFICATION AND AUDIO

The 600-HP uses sophisticated amplification and protection circuitry to produce consistent and predictable results in any system design. This chapter will help you understand and harness the power of the 600-HP amplifier and audio systems.

The rear panel of the 600-HP (Figure 3.1) provides AC connection, audio input and loop out.

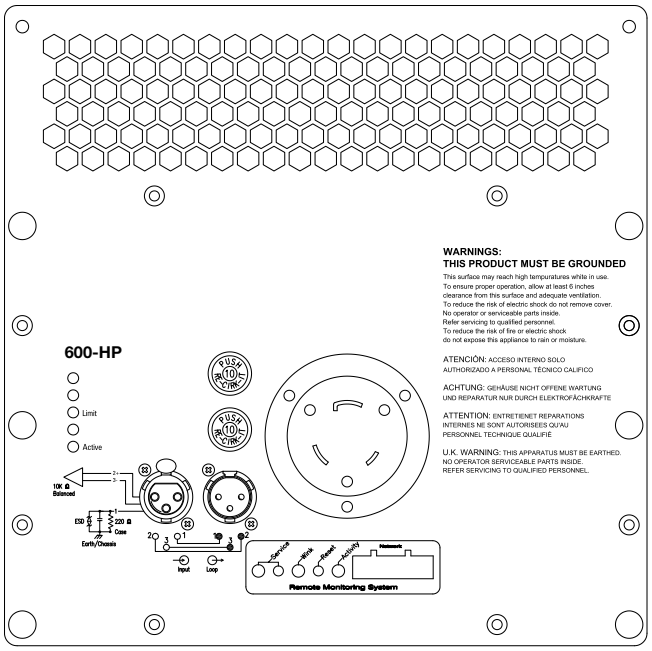


*Figure 3.1. The rear panel of the 600-HP*

## AUDIO INPUT

The 600-HP presents a 10 kOhm balanced input impedance to a three-pin XLR connector with the following connections:

- Pin 1 — 220 kOhm to chassis and earth ground (ESD clamped)
- Pin 2 — Signal ( + )
- Pin 3 — Signal ( - )
- Case — Earth (AC) ground and chassis

Pins 2 and 3 carry the input as a differential signal; pin 2 is hot relative to pin 3, resulting in a positive pressure wave when a positive signal is applied to pin 2. Pin 1 is connected to earth through a 220 kOhm, 1000 pF, 15 V clamp network. This ingenious circuit provides virtual ground lift for audio frequencies, while allowing unwanted signals to bleed to ground.

**CAUTION:** Shorting an input connector pin to the case can form a ground loop and cause hum.

Use standard audio cables with XLR connectors for balanced signal sources. Make sure that pin 1 (shield) is always connected on both ends of the cable. Telescoping grounding schemes are not recommended.

**CAUTION:** Ensure that all cabling carrying signal to 600-HPs in a system is wired correctly: Pin 1 to Pin 1, Pin 2 to Pin 2, and so forth, to prevent the polarity from being reversed. Any number of loudspeakers with reversed polarity — even one in the subwoofer system — will result in severe performance degradation.

Audio signals can be daisy-chained using the loop output connector on the User Panel (Figure 3.2). A single source can drive multiple 600-HPs with a paralleled input loop, creating an unbuffered hard-wired loop connection.

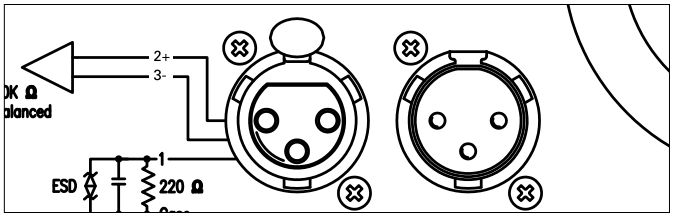


*Figure 3.2. 600-HP rear panel audio input connectors*

When driving multiple 600-HPs in a system, make certain that the source device can drive the total load impedance presented by the paralleled input circuit of the system. The audio source must be capable of producing 20 dBV (10 volts rms into 600 ohms) in order to produce the maximum peak SPL over the operating bandwidth of the subwoofer.

To avoid distortion from the source, make sure the source equipment provides an adequate drive circuit design for the total paralleled load impedance presented by the system. The input impedance for a single subwoofer is 10 kOhms. This is easy to calculate: if n represents the number of 600-HPs in a system, paralleling the inputs of n subwoofers will produce a balanced input load of 10 kOhms divided by n.

For example, cascading ten 600-HPs produces an input impedance of 1000 ohms (10 kOhms divided by 10). The source equipment should have an output impedance of 100 ohms or less. This is also true when connecting 600-HPs in parallel (loop out) with other self-powered Meyer Sound loudspeakers, for example, MICA, CQ-1, CQ-2, UPA-1P, and UPA-2P.

**NOTE:** Most source equipment is safe for driving loads no smaller than 10 times the source's output impedance. For example an equalizer with a 150 Ohms output impedance should be able with drive a load of 1500 Ohms.

**TIP:** If abnormal noises such as hum and popping are produced by the subwoofer, disconnect the audio cable from the subwoofer. If the noise stops, then most likely the problem is not with the subwoofer. Check the audio cable, source, and AC power for the source of the problem.

Meyer Sound LD-1A, LD-2, and LD-3 line drivers and the Galileo 616 loudspeaker management system are highly recommended when driving systems using multiple loudspeakers. These line drivers, in addition to maintaining signal integrity for long cable paths, offer independent outputs and filters to help you integrate 600-HP subwoofers into your system.

**NOTE:** For details on the 600-HP's audio input characteristics and amplification, see Appendix B: Specifications.

## 600-HP INTERCONNECTIONS

The 600-HP utilizes two 4-ohm, 15-inch cone drivers, specially designed for subwoofer applications. These high-excursion, back-vented drivers are rated to handle 1200 AES watts. Each channel of the amplifier drives one low-frequency driver.

**CAUTION:** All Meyer Sound loudspeakers are shipped with the drivers in correct alignment. However, if a driver needs to be replaced, make sure the replacement is reinstalled with the correct polarity. Incorrect driver polarity impairs the system performance and may damage the drivers.

The 600-HP is powered by the Meyer Sound HP-2/600 two-channel amplifier. The class AB/H amplifier utilizes complementary MOSFET output stages capable of delivering 2250 watts total output power (4500 watts peak). All specific functions for the 600-HP, such as crossover points, frequency and phase response, and driver protection are determined by the control card installed inside the amplifier.

## CABLING

The 600-HP is available with two different cabling/connection options. One is the Meyer Sound/VEAM cable system, which combines AC power, audio signal, and RMS network data into one heavy-duty cable with a single matching connector per 600-HP cabinet.

The other (standard) system uses three separate cables and connectors per cabinet for the AC line current, signal, and RMS data. However, the three can be consolidated to create a "multi-cable" by looming them together for quick connection to each cabinet. This ensures no patching errors and a minimum of discrete cables behind if the 600-HP cabinets are stacked in an array.

A ring fitting is provided on the rear of the 600-HP loudspeaker to act as a strain relief for cabling. Using this ring will minimize the chance of cables being damaged during installation.

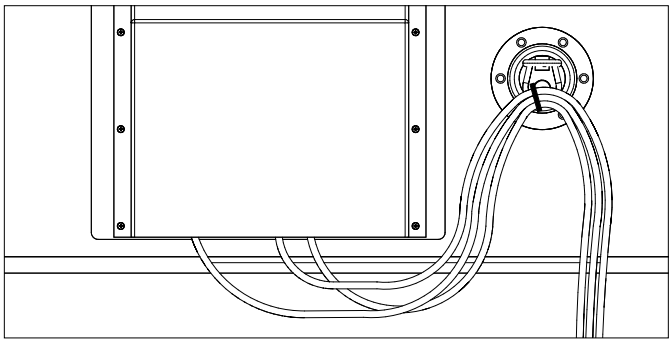

*Figure 3.3. Tie cables off using ring (shown with rain hood installed).*

## 600-HP LIMITING

The 600-HP uses Meyer Sound's advanced TruPower® limiting. Conventional limiters assume a constant loudspeaker impedance and therefore set the limiting threshold by measuring voltage only. This method is inaccurate, because the speaker's impedance changes in response to the frequency content of the source material and thermal variations in the speaker's voice coil and magnet. Consequently, conventional limiters begin limiting prematurely, which underutilizes system headroom and lessens the speaker's dynamic range.

In contrast, TruPower accounts for varying loudspeaker impedance by measuring current, in addition to voltage, to compute the actual power dissipation in the voice coil. TruPower improves performance before and during limiting by allowing each driver to produce maximum SPL across its entire frequency range.

**NOTE:** TruPower limiting only reduces the signal level to keep the voice coil below 180° C, hence peaks are unaffected.

TruPower limiting also eliminates power compression when the system is operated at high levels for extended periods, and extends the driver life cycle by controlling voice coil temperatures.

The 600-HP's left and right 15-inch cone drivers are powered by separate amplifier channels, each with a power detector but routed to one limiter; the limiter tracks both channels and uses the higher of the two values to engage. When the safe continuous power level is exceeded in either channel, the TruPower limiter controlling both amplifier channels engages.

TruPower limiting activity is indicated by the Limit LED on the amplifier's user panel. When it turns on, it shows TPL activity that indicates when the safe power level is exceeded (Figure 3.4).

Limiters cease operation when the power level and voltage for the channel returns to normal, below the limiter's threshold. The limiting circuitry utilizes optical limiters that add no noise and have no effect on the signal when the limiter is not engaged and the LED is inactive.

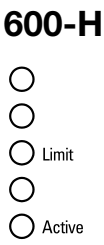


*Figure 3.4. The 600-HP subwoofer's Limit indicator*

The 600-HP performs within its acoustical specifications and operates at a normal temperature if the Limit LED is lit for no longer than two seconds, and then goes off for at least one second. If the limit LED remains on for longer than three seconds, the 600-HP enters hard limiting with the following negative consequences:

- Increasing the input level will not increase the volume.
- The system distorts due to clipping and nonlinear driver operation.
- The lifespan of the drivers is reduced because they are subjected to excessive heat.

**CAUTION:** While the limiters protect the system under overload conditions and exhibit smooth sonic characteristics, we recommend that you do not drive the 600-HP into continuous limiting. If an entire system of 600-HPs begins to limit before reaching the required sound pressure level (SPL), you should consider adding more subwoofers to the system.

## 600-HP AMPLIFIER COOLING SYSTEM

The 600-HP uses a forced-air cooling system with two fans (one primary and one reserve) to prevent the amplifier module from overheating. The primary fan draws air in through ducts on the front of the cabinet, over the heatsink, and out the rear of the cabinet. Because dust does not accumulate in the amplifier circuitry, its lifespan is increased significantly. The front grille surface acts as an air filter for the cooling system and should always be in place during operation (Figure 3.5).

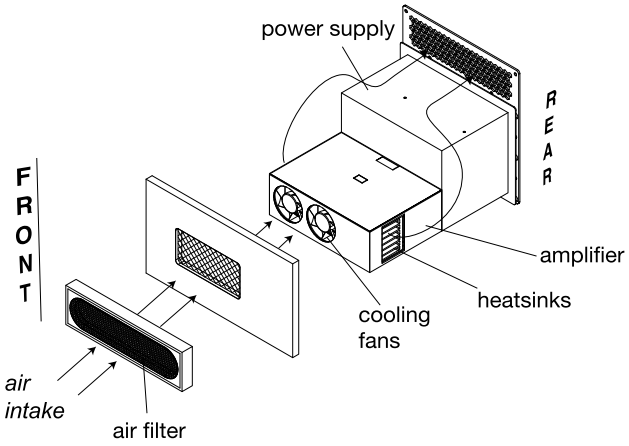


*Figure 3.5. Airflow through the 600-HP*

**CAUTION:** When operating a weather-protected 600-HP with the optional collapsible cloth rain hood installed, always be sure the rain hood is fully open. Leaving the hood closed or partially open will limit the airflow through the amplifier, which could cause it to overheat and shut down. A clear, high-impact plastic quick-clip rain hood comes standard with 600-HP weather-protected version.

The variable-speed primary fan runs continuously with an inaudible operating noise at its slowest speed. The primary fan begins increasing speed when the heatsink reaches 42˚ C. The fan reaches full speed at 62˚ C and is barely audible near the cabinet, even without an audio signal. In the event that the heatsink temperature reaches 74˚ C, the secondary fan turns on and is clearly audible without an audio signal. The secondary fan turns on in response to:

- Primary fan failure (check status immediately)
- High source levels for a prolonged period
- Accumulation of dust along the cooling path

The secondary fan turns off when the temperature decreases to 68˚ C.

**NOTE:** In the highly unlikely event that the secondary fan does not keep the temperature below 85˚ C, the 600-HP automatically shuts down until AC power is removed and reapplied. If the 600-HP shuts down again after cooling and reapplying AC power, contact Meyer Sound for repair information.

Despite the 600-HP's filtering, extensive use or a dusty operating environment can allow dust to accumulate along the path of the airflow, preventing normal cooling. To prevent this, you should periodically remove the grille frame, air-intake foam and amplifier module and use compressed air to clear dust from the grille, foam, fans, and heatsinks. Make sure that the air ducts are clear.

**CAUTION:** Be sure to unplug power to the unit before cleaning the amplifier.

# CHAPTER 4: RMS REMOTE MONITORING SYSTEM (OPTIONAL)

The RMS communication module is standard in 600-HP subwoofers with the MRF-600 rigging frame installed and is optional in the other models, making use of Meyer Sound's RMS remote monitoring system. RMS is a real-time networked monitoring system that connects Meyer Sound self-powered loudspeakers with a Windows-based PC at the sound mix position or other desired location. Optional RMS software delivers extensive status and system performance data directly to you from every installed loudspeaker.

RMS allows you to monitor amplifier voltages, limiting activity, power output, temperature, fan and driver status, warning alerts, and other key data for up to 62 loudspeakers without a network repeater; data is updated two to five times per second.

**NOTE:** Optional Loudspeaker Mute and Solo functions, helpful for acoustic setup or troubleshooting, are also available. A jumper must be installed in the RMS communication module in order to enable Mute and/or Solo functionality; the software also needs to be enabled for these functions.

If your 600-HP is shipped fitted with an RMS communication module, Loudspeaker Mute and Solo functions are disabled by default. Once enabled, the jumper(s) can still be removed to eliminate any chance of an operator error (a muting error, for example) during a performance, and both functions can be controlled by software commands in any case. Also note that RMS does not control loudspeaker volume or AC power.

Loudspeakers are identified on the network by Node Names assigned during a one-time "commission" (Figure 4.1) into the RMS database that resides on your computer (as a part of the software).

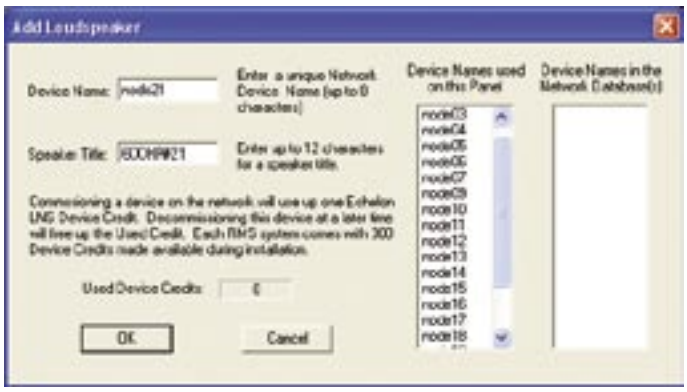


*Figure 4.1. Commissioning a loudspeaker using RMS*

This information is permanently retained on each RMS communication module and in the computer RMS database unless you modify it. Speaker View labels can be modified at any time, allowing you to customize how you view the data.

Pressing the "service" button on the 600-HP loudspeaker's RMS module will help quickly identify the 600-HP in the RMS software window; an icon corresponding to its Node Name will appear on screen. In addition, clicking on the icon's Wink command will turn on the LED labeled "Wink" on the 600-HP loudspeaker's RMS module. This back and forth communication between the software and the loudspeaker makes identifying loudspeakers and icons easy.

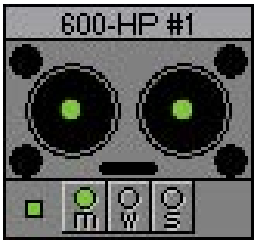


*Figure 4.2. RMS loudspeaker icons*

## UNDERSTANDING THE RMS COMMUNICATION MODULE'S USER PANEL

The RMS communication module's user panel, shown in Figure 4.3, has three LEDs and two buttons. The following sections describe their functions.

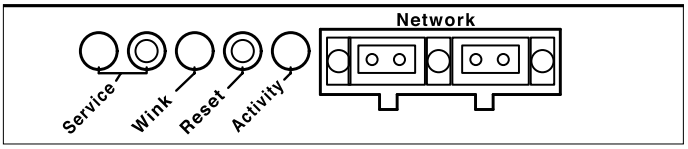


*Figure 4.3. The RMS user panel*

### Service LED (Red)

When blinking once every two seconds, the Service LED indicates that the network hardware is operational, but the loudspeaker is not installed (commissioned) on the network. When a loudspeaker has been installed on the network, the Service LED will be unlit and the Activity LED will flash continuously.

**NOTE:** When continuously lit, the Service LED indicates that the loudspeaker has had a local RMS hardware failure. In this case, the RMS communication module may be damaged and you should contact Meyer Sound Technical support.

### Service Button

Pressing the Service button will notify the corresponding loudspeaker display icon on the RMS screen. When used in combination with the Reset button, the card will be decommissioned from the network and the red Service LED will blink.

### Wink LED (green)

When lit, the Wink LED indicates that an ID signal has been sent from the host station computer to the loudspeaker. This is accomplished using the Wink button on the loudspeaker Icon, Meter or Text views in the RMS monitoring program.

### Reset Button

Pressing the Reset button will cause the firmware code within the RMS card to reboot. However, the commissioning state of the card will not change (this is stored in flash memory). When used in combination with the Service Button, the card will be decommissioned from the network and the red Service LED will blink.

### Activity LED (Green)

When the loudspeaker has been commissioned, the Activity LED will flash continuously. When the Activity LED is unlit the loudspeaker has not been installed on the network.

**NOTE:** The LEDs and buttons on the user panel of the RMS communication board shown back in Figure 4.3 are used exclusively by RMS, and have no effect on the acoustical and/or electrical activity of the 600-HP itself — unless MUTE or SOLO is enabled on the RMS module and from the RMS software.

## USER INTERFACE

The RMS software features an intuitive, graphical Windows user interface. As mentioned earlier, each loudspeaker appears on the computer's color monitor as a "view" in the form of a status icon, bar graph meter, or text meter (numerical values), depending on your preferences.

Each view contains loudspeaker identification and data from the unit's amplifier, controller, drivers and power supply. System status conditions cause changes in icon and bar graph indicators, alerting the operator to faults or excessive levels. The views are moveable and are typically arranged on the screen to reflect the physical layout of the loudspeakers. You can design a screen "panel" of icons or meters, as shown in Figure 4.4, and save it on the computer's hard disk, with the panel conveniently named for a unique arrangement or performer.

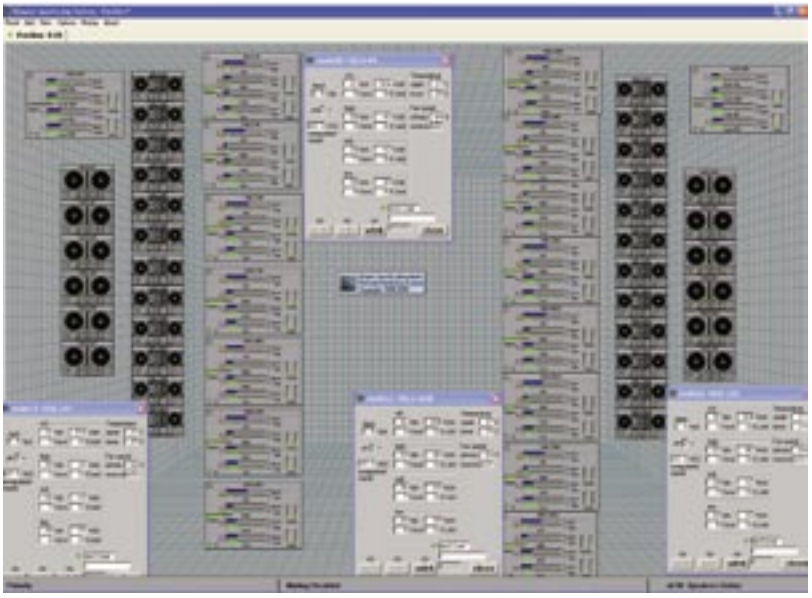

*Figure 4.4. The RMS application's user interface*

If the installation pattern changes completely, a new screen panel can be built. If a subset of installed loudspeakers will be used for a subsequent event, only selected loudspeakers need to appear on screen for that performance.

**NOTE:** For more information on RMS, please visit www.meyersound.com, or refer to the RMS User Guide included with the software.

# CHAPTER 5: SYSTEM INTEGRATION

## USING 600-HP SUBWOOFERS WITH OTHER MEYER SOUND LOUDSPEAKERS

It is often necessary to augment mid-high or full-range systems with subwoofers when higher SPL is needed, or the program content requires additional low-frequency energy (e.g., the reinforcement of popular music).

The 600-HP subwoofer can achieve frequencies down in the 36 Hz range, extending the system response appreciably and increasing the acoustic power of the system in the lowest frequencies. In addition, the use of high-pass and/or low-pass filters to drive a system with subwoofers can improve the interaction between the subwoofers and the system in the crossover area, as well as increase the system's headroom.

The ideal ratio of 600-HP subwoofers with respect to other loudspeakers in the system depends on:

- The loudspeaker type being used in conjunction with the 600-HP (MICA, CQ-1, UPA-1P, etc.)
- The configuration of the system, whether flown or ground-stacked
- The frequency content of the signal being reproduced by the system, e.g., classical music, rock, or speech

When considering the ratio of loudspeakers to subwoofers in a system, it is important to consider not only the frequency response for the system, but also the headroom required to satisfy the SPL at a low frequency for the situation.

Common applications for the 600-HP involve using the subwoofer with MICA curvilinear array loudspeakers, since its rigging is directly compatible, as well as with other M Series, Concert Series, and UltraSeries loudspeakers. In many circumstances, two loudspeakers for each subwoofer yield good results in frequency response and headroom.

**NOTE:** In demanding low-frequency applications, using more subwoofers is highly recommended (for example, three loudspeakers for two subwoofers) to avoid negative consequences such as decreasing the headroom at the low end of the spectrum, increasing distortion, and exposing the 600-HP drivers to excessive power levels.

**CAUTION:** The 600-HP's limit LEDs indicate when the safe power level is exceeded. If the subwoofers used in the system begin to limit before reaching the required SPL at low frequencies, consider adding more subwoofers to satisfy the SPL requirements without exposing the drivers to excessive heat and/or excursion.

### Subwoofer Placement

One of the most important factors governing subwoofer response is their placement relative to adjacent surfaces. Subwoofers gain significant power by coupling (known as loading) with nearby floors and walls. A subwoofer placed on the floor benefits from half-space loading, and generates approximately 6 dB of additional SPL on-axis into the room compared to that same subwoofer in free space (suspended above the floor).

**NOTE:** It can be beneficial in some cases to fly subwoofers, even though they do not benefit from half-space loading. Placing subwoofers within a flown array of mid-high loudspeakers can create a smoother full-range frequency image because the subwoofers are not separated by the distance from the flown array to the floor. When subwoofers are flown, consider adding more subwoofers to satisfy the SPL and headroom requirements of the design.

### 600-HP Used with MICA Curvilinear Array Loudspeakers

When fitted with MRF-600 rigging hardware, the 600-HP subwoofer may be flown at the top of a MICA array to augment the system's low-frequency output and headroom. The 600-HP links directly to the MG-MICA rigging grid, and multiple units may be added. The 600-HP's rigging can provide either uptilt or downtilt to the MICA array suspended below. A separate 600-HP subwoofer array can also be flown next to a MICA or other array using the MG-MICA grid.

The 600-HP will extend the low-frequency response of the system by approximately one octave, as well as provide additional headroom in the lowest octave of the MICA's range. While the 600-HP subwoofer and MICA loudspeaker both have internal active crossover electronics that are optimized for the system, using the LD-1, LD-2, or LD-3 line drivers or the Galileo loudspeaker management system is recommended for the best results.



*Figure 5.1. Array with 600-HP and MICA*

## 600-HP Used with Concert and UltraSeries Loudspeakers

All Meyer Sound self-powered products have been optimized with internal crossover networks. When Meyer Sound loudspeakers are used in close proximity and are coplanar, these networks provide maximum power addition through their respective overlapping frequency ranges.

Several basic connection options are available when using the 600-HP subwoofer with other Meyer Sound Concert or UltraSeries loudspeakers, as discussed in the following sections.

## Daisy-Chained

If 600-HP subwoofers and other Meyer Sound loudspeakers are daisy-chained using the loop feature on the user panel, the result is a smooth frequency response through the "overlap range." When the 600-HP and other Meyer Sound loudspeakers are coplanar, this usually occurs at a ratio of two loudspeakers to each 600-HP. This is the configuration commonly used in small systems.

**NOTE:** Full-range signals may be applied to Meyer Sound's self-powered loudspeakers and subwoofers because they have built-in active crossovers.

The 600-HP subwoofers should be placed as close as possible to the other loudspeakers so that the relative distances between them are the same at all listening positions.

**NOTE:** When 600-HP subwoofers are used with Concert Series or UltraSeries loudspeakers in their full-range configuration (e.g., looped audio or the same audio feed), their polarities should be the same if they are coplanar or near each other. The 600-HP does not have a polarity reversal switch, so make sure that all systems are set to Pin 2 +. If they are separated by a greater distance — or delay must be used between them — a measurement system such as the SIM audio analyzer should be used to determine the correct delay and polarity.

**CAUTION:** When daisy-chaining, make sure that the source equipment can drive the total load of the paralleled array. (See Chapter 3: Amplification and Audio.)

## Adding an LD-1A/LD-2 Line Driver

Driving 600-HP subwoofers and Meyer Sound loudspeakers with the same signal from different outputs using a line driver allows adjustments to the gain of each sub-system, and could be used effectively to compensate for the ratio of loudspeakers or acoustical conditions. If the gains are adjusted to the same level, the combined response is identical to a daisy-chained configuration.

## Using the LD-1A/LD-2's Lo-Cut Filter

Using the Lo-Cut filter of the LD-1A or LD-2 (Figures 5.1 and 5.2, respectively) optimizes the full-range loudspeaker headroom and reduces the area of overlap; the full-range loudspeakers in the system receive their signal following a Lo-Cut (high-pass) filter, while the 600-HP subwoofers apply their normal internal crossover frequencies to a full-range signal. This configuration results in a smooth frequency response through crossover and reduces the overlap frequency range between the speakers. However, the use of external filters — like the Lo-Cut in the LD-1A and LD-2 — is optional, and should be used very carefully to minimize phase shifts that can cause cancellations in the overlap area.

**NOTE:** When driving Concert or UltraSeries loudspeakers from the Mid-Hi output of the LD-1A or LD-2 line driver, with the Lo-Cut filter engaged and the 600-HP subwoofers in their full-range configuration, a change of polarity on the Sub Output might be needed due to the phase shift caused by the high-pass filter at overlapping frequencies. Placing the subwoofers more than 4 feet apart may require reversing the polarities once again to compensate for the delay propagation. If they are separated by a greater distance — or delay must be used between them — a measurement system such as the SIM audio analyzer should be used to determine the correct delay and polarity.



*Figure 5.1. The LD-1A line driver*



*Figure 5.2. The LD-2 line driver*

## Adding an LD-3 Compensating Line Driver

Full-range signals may be applied to Meyer Sound's self-powered loudspeakers and subwoofers because they have built-in active crossovers. However, the use of external filters — like the ones in the LD-3 compensating line driver (Figure 5.3) — is highly recommended, especially in medium-to-large systems.



*Figure 5.3. The LD-3 compensating line driver*

Using the LD-3's filters helps to easily integrate and optimize a MICA or other M Series array with the 600-HP subwoofers. The use of high-pass filters (HPF) augments aray headroom by removing lower frequencies near the array loudspeaker's lower operating range, while low-pass filters (LPF) can remove unwanted mid-low frequencies reproduced by the stack of subwoofers. The use of these filters reduces the area of overlap and minimizes the interaction and possible cancellations between subsystems, usually resulting in highly desirable behavior, such as very flat frequency response.

**NOTE:** The use of external filters — like the ones in the LD-3 — should be used very carefully to minimize phase shifts that can cause cancellations.

**NOTE:** When driving the system using the LD-3 with the filters engaged, a change of polarity on the Sub Output might be needed due to the phase shift caused by the filters at overlapping frequencies. Placing the subwoofers more than 4 feet apart may require reversing the polarities once again to compensate for the delay propagation. If they are separated by a greater distance — or delay must be used between them — a measurement system such as the SIM audio analyzer should be used to determine the correct delay and polarity.

## Using the Galileo 616 Loudspeaker Management System

The Galileo 616 loudspeaker management system (Figure 5.4) is a combined hardware and software solution, offering six inputs and 16 outputs. Along with the Compass™ software, the matrix structure of Galileo allows any combination of inputs to be assigned to any combination of outputs, and provides the ability to individually tailor the delay, level, and equalization of each of these inputs and outputs.



*Figure 5.4. Galileo 616 loudspeaker management system*

When used with the 600-HP subwoofer, Galileo offers a sophisticated means of integrating the entire loudspeaker system. Low-pass filters may be applied to the signal source going to the subwoofers, and multiple sources can be summed to that output. Galileo can be directly connected with the SIM 3 audio analyzer system, permitting the entire system to be optimized and measured.

## Digital Signal Processors

Full-range signals may be applied to Meyer Sound's self-powered loudspeakers because they have built-in active crossover circuits; external crossovers and digital signal processors (DSP) are optional and should be used very carefully due to phase shifts that can cause cancellations.

If DSP is used, both Meyer Sound loudspeakers and 600-HP subwoofers should be fed from the DSP in order to keep their delay time the same. Otherwise, you may experience

phase shift differences between the loudspeakers and the subwoofers. In addition, you should verify the delay time between channels. Some DSPs may develop channel-to-channel variations in delay when the DSP is near maximum throughput, which becomes more likely as the number of filters the DSP is using increases.

**NOTE:** Avoid using filters higher than 2nd order. The additional phase shift introduced deteriorates the impulse response and higher roll-off does not improve crossover interaction.

**NOTE:** Some filters on the LD-3 and Galileo are parabolic filters with minimal phase shift; most commercially available DSP devices have no presets to emulate these parabolic filters.

**CAUTION:** If the loudspeakers are going to be driven directly from the DSP, verify that the outputs of the processor have the driving capabilities to drive the total load presented by the loudspeakers connected to it. Please refer to the Audio Input section of Chapter 3: Amplification and Audio.

**NOTE:** When precise array design, subwoofer integration, DSP and delay systems, and compensation for acoustical conditions all come into play, measurement and correction tools are a must. Meyer Sound's SIM 3 audio analyzer system and Galileo 616 (or a combination of LD-1A/LD-2/LD-3 line drivers, CP-10 parametric equalizers, VX-1 program equalizers, and signal delays) are highly recommended.

# CHAPTER 6: SYSTEM DESIGN AND INTEGRATION TOOLS

Meyer Sound offers two comprehensive tools to assist you with the acoustical and functional requirements of system design and optimization. This chapter introduces you to MAPP Online Pro, Meyer Sound's powerful online acoustical prediction tool, and SIM 3, a robust instrumentation package for system measurement, analysis, and more.

## MEYER SOUND MAPP ONLINE PRO

Based on a patented method, MAPP Online Pro is a powerful, cross-platform, Java-based application for accurately predicting the coverage pattern, frequency response, impulse response, and maximum SPL output of single or arrayed Meyer Sound loudspeakers.

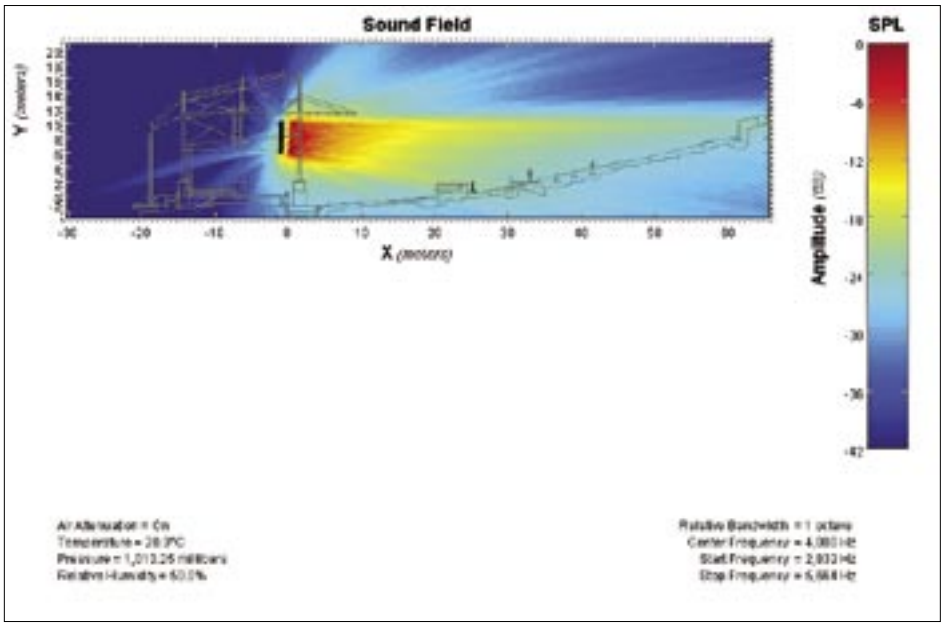


*Figure 6.1. MAPP Online Pro is an intuitive, powerful system design tool*

Residing on the user's local computer, the Java client application facilitates configuring arrays of a wide variety of Meyer Sound products and, optionally, defining the environment in which they will operate, including air temperature, pressure, humidity, and the location and composition of walls. In addition CAD (DXF) files can be imported directly for accurate venue definition. You can find more information as well as apply for MAPP Online Pro at:

www.meyersound.com/mapponlinepro

**NOTE:** To use MAPP Online Pro, you will need to register by clicking the "Apply for MAPP Online Pro" button on the Web page listed previously, or the "MAPP Online Pro" button on www.meyersound.com. After registration and upon approval, an email will be sent to you with a user name and password along with the URL where you can download MAPP Online Pro. Online instructions will guide you through the download and setup process.

When a prediction is requested, data are sent over the Internet to a high-powered server at Meyer Sound running a sophisticated acoustical prediction algorithm using high-resolution, complex (magnitude and phase) polar data. Predicted responses are returned over the Internet and displayed on the local computer in color.

**With MAPP Online Pro, you can:**

- Run multiple "what if" scenarios in minutes to refine your system design for best coverage of the intended audience area
- Clearly see interactions among loudspeakers to help minimize destructive interference by re-aiming the loudspeakers or adjusting the position
- Place microphones anywhere in the sound field and predict the frequency response, impulse response, and sound pressure at the microphone position
- Plan an entire portable or fixed loudspeaker system and determine delay settings for fill loudspeakers
- Use virtual Galileo equalization to predetermine the correct control settings for best system response
- Gain valuable load information about the array to determine rigging capacities, front to back weight distribution, as well as center of gravity of the array
- Export images to help generate explanatory presentation materials for clients

The key to MAPP Online Pro's value is the accuracy of its predictions. Performance predictions for each Meyer Sound loudspeaker found in MAPP Online Pro are based on a model of that product built from 360 1/48th-octave–band measurements taken with a SIM audio analyzer in our anechoic chamber. The extreme consistency found from cabinet to cabinet in Meyer Sound products guarantees that the predictions MAPP Online Pro makes from this high-resolution data will closely match actual performance.

For touring, MAPP Online Pro allows fast and accurate planning of system deployment for each venue on the tour, including both coverage and rigging information. Sound system designers for fixed installations can inform clients with understandable graphic illustrations and detailed statistics on how a proposed system will perform. The designer then arrives at the installation prepared with a wealth of information that ensures the system will satisfy their requirements "out of the box," including basic system delay and equalization settings. MAPP Online Pro's accurate, high-resolution predictions eliminate unexpected coverage problems and minimize onsite adjustments.

MAPP Online Pro client software is upgraded continually in order to add new Meyer Sound products to the database and enhance user features. Most upgrades are downloaded automatically when logging on to a MAPP Online Pro session. The MAPP Online Pro database includes nearly all current Meyer Sound products, including all M Series full-range and subwoofer cabinets.

MAPP Online Pro is compatible with Windows, Linux®, Unix®, and MacOS® (10.2 and higher) operating systems. Additional system requirements and recommendations are listed on the MAPP Online Pro web page

## SIM 3 MEASUREMENT SYSTEM

The SIM 3 audio analyzer system includes a selection of hardware options, microphones, and accessory cables.

The SIM audio analyzer system is optimized for making audio frequency measurements of an acoustical system with a resolution of up to 1/48th of an octave; the high resolution enables you to apply precise electronic corrections to adjust system response using frequency and phase (time) domain information.

### Source Independent Measurement Technique

The SIM 3 audio analyzer implements the Meyer Sound source independent measurement technique, a dual-channel method that accommodates statistically unpredictable excitation signals. Any excitation signal that encompasses the frequency range of interest (even intermittently) may be used to obtain highly accurate measurements of acoustical or electronic systems. For example, concert halls and loudspeaker systems may be characterized during a musical performance using the program as the test signal, allowing you to:

- View measurement data as amplitude versus time (impulse response) or amplitude and phase versus frequency (frequency response)
- Utilize a single-channel spectrum mode
- View frequency domain data with a logarithmic frequency axis
- Determine and internally compensate for propagation delays using SIM 3 Delay Finder function

### Applications

The main application of the SIM 3 audio analyzer is loudspeaker system testing and alignment. This includes:

- Measuring propagation delay between the subsystems to set correct polarities and set very precise delay times
- Measuring variations in frequency response caused by the acoustical environment and the placement and interaction of the loudspeakers to set corrective equalization
- Optimizing subwoofer integration
- Optimizing loudspeaker arrays

The analyzer can also be used in the following applications:

- Microphone calibration and equalization
- Architectural acoustics
- Transducer evaluation and correction
- Echo detection and analysis
- Vibration analysis
- Underwater acoustics

# CHAPTER 7: QUICKFLY RIGGING AND GROUND-STACKING

When fitted with the optional MRF-600 rigging frame, the 600-HP may be flown alone or with MICA curvilinear array loudspeakers. It may also be ground-stacked in vertical and horizontal arrays using this version or the versions with handles or plain side panels.

Using subwoofers to supplement the low-frequency headroom of a full-range or mid-high sound reinforcement system requires an understanding of how subwoofers respond when grouped together, how they interact with nearby walls and floors, and how their location in a system affects their use in relation to other loudspeakers.

## FLYING THE 600-HP SUBWOOFER

The 600-HP subwoofer optionally features Meyer Sound's QuickFly rigging system with rugged, reliable and simple components. QuickFly facilitates deploying the loudspeakers in a variety of applications. The 600-HP is designed to be rigged using professional components, and its custom front and rear GuideALinks™ rigidly couple the individual subwoofers to each other or along with MICA array loudspeakers for flying, stacking, or transporting in stacks while still in various splayed positions.

**CAUTION:** All Meyer Sound products must be used in accordance with local, state, federal and industry regulations. It is the owner's and/or user's responsibility to evaluate the reliability of any rigging method for their application. Rigging should be carried out only by experienced professionals.

**CAUTION:** Always use properly rated rigging hardware.

**CAUTION:** It is important to inspect rigging hardware regularly and replace worn or damaged components immediately.

## GUIDEALINK RIGGING FRAME

600-HP subwoofers equipped with the optional MRF-600 rigging frame can be linked directly to the MG-MICA grid and to MICA loudspeakers to form flown and ground-stacked arrays.

The 600-HP's captive QuickFly rigging hardware — like MICA's — features rigid GuideALinks contained within recessed guides in the bottom front and rear corners of the enclosure. A slot and convenient pinned knob allow each link to be moved and pinned for arraying and storage. In normal use, the front links are used as the pivot point, and the splay between enclosures is introduced with the rear links.

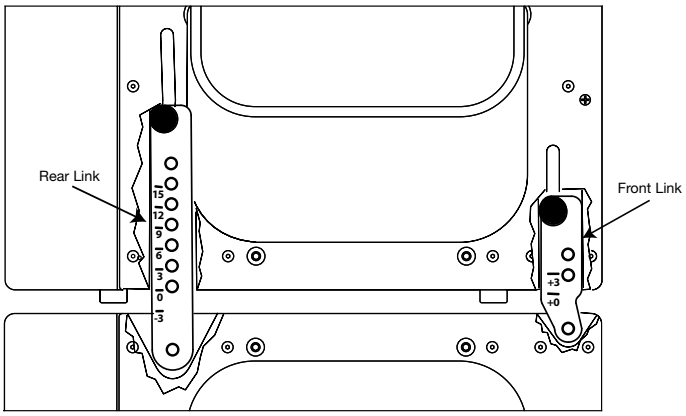


*Figure 7.1. Front and rear GuideALinks*

The rear links provide seven positions, marked -3, 0, 3, 6, 9, 12, and 15. The resulting angle these link positions represent depends on whether the 600-HP is linked to another 600-HP or to a MICA loudspeaker.

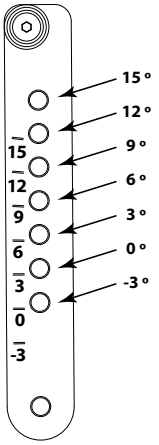


*Figure 7.2. The rear GuideALinks provide seven positions*

**CAUTION:** As part of the regular inspection and maintenance procedure for 600-HP loudspeakers, check each of the captive GuideALink pins to ensure that they are tight by turning them counterclockwise by hand. If a pin turns, it must be reset into the link using Loctite® 290, and be allowed to cure for 48 hours and retested before the loudspeaker is flown.

The front links may be set in two different positions:

- 0°: This is the standard position (left figure) and it is used to achieve a 0-degree angle between adjacent 600-HP enclosures.
- +3°: The main purpose for this extended position (right figure) is to curve a 600-HP stand-alone array that is flown next to a MICA array, both for appearance and to keep the subwoofer array from blocking the horizontal high-frequency coverage from the MICA enclosures lower in the array.

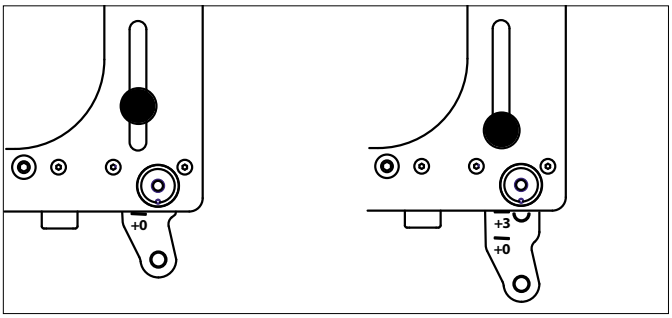


*Figure 7.3. Front GuideALInks set at 0° and +3°*

## RIGGING CONFIGURATIONS AND TILT ANGLES

The resulting angle from the positioning of the front and rear links depends on whether they are being used to link to other 600-HP subwoofers or to MICA array loudspeakers.

### 600-HP to 600-HP

#### *Flown*

When 600-HPs are flown, the GuideALinks allow a variety of combinations. However, the most common is at 0 degrees. In addition, when flown it is possible to achieve to a 3-degree downtilt to curve a 600-HP stand-alone array that is flown next to a MICA array, both for appearance and to keep the subwoofer array from blocking the horizontal high-frequency coverage from the MICA enclosures lower in the array.

**Table 7.1. 600-HP Link Positions to 600-HP (flown)**

| Rear | Front | Angle for 600-HP below |
|---|---|---|
| 0 | 0 | 0° |
| 0 | +3 | 3° downtilt |

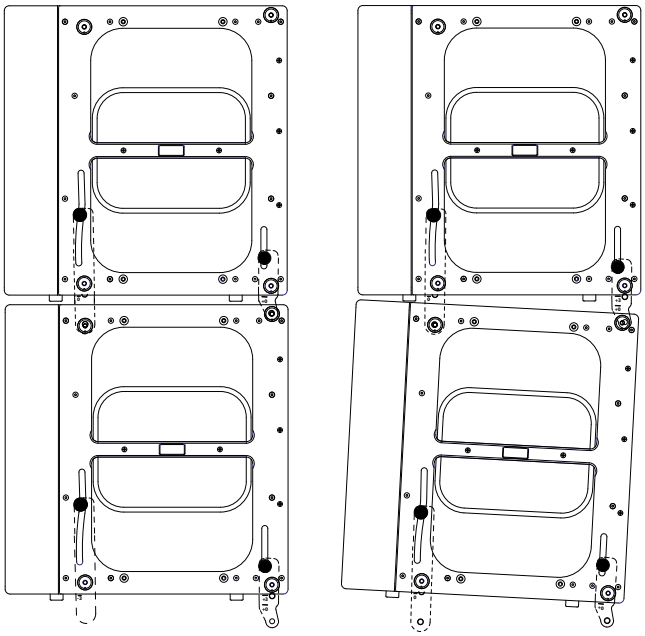

*Figure 7.4. 600-HP at 0 degrees (left) and at -3 degrees*

**NOTE:** Not all mechanically possible combinations between two 600-HP are useful — for example, concave angles between two subs. These combinations are possible because the 600-HP rigging was designed to also allow a wide number of combinations between 600-HP when flown or ground-stacked with MICA loudspeakers.

#### *Ground-stacked*

When 600-HPs are ground-stacked, the GuideALinks allow a variety of combinations. However, the most common is at 0 degrees. In addition, it is possible when ground-stacked to achieve to a 3-degree uptilt to curve a 600-HP stand-alone array for purposes of appearance.

**Table 7.2. 600-HP Link Positions to 600-HP (ground-stacked)**

| Rear | Front | Angle from 600-HP below |
|---|---|---|
| 0 | 0 | 0° |
| 0 | +3 | 3° uptilt |

### 600-HP to MICA

#### *Flown*

MICA and 600-HP loudspeakers can be combined within the same array to supplement and extend low-frequency headroom in the system. The rigging on both models is completely compatible. When flown, the 600-HP subwoofers are typically positioned at the top, and linked to the MICA with an uptilt or downtilt as needed to meet the requirements of the installation.

This rigging capability allows all of the 600-HPs to be positioned at 0 degrees in relation to each other and to the MG-MICA grid, while introducing the desired angle to the MICA array using the GuideALinks on the lowest 600-HP enclosure — without needing to adjust the angle of the remaining 600-HPs or the MG-MICA grid.

Table 7.3. 600-HP Link Positions to MICA (flown)

| Rear | Front | Angle for MICA below |
|---|---|---|
| -3 | +3 | 6° downtilt |
| 0 | +3 | 3° downtilt |
| 0 | 0 | 0° |
| 3 | 0 | 3° uptilt |
| 6 | 0 | 6° uptilt |
| 9 | 0 | 9° uptilt |
| 12 | 0 | 12° uptilt |
| 15 | 0 | 15° uptilt |

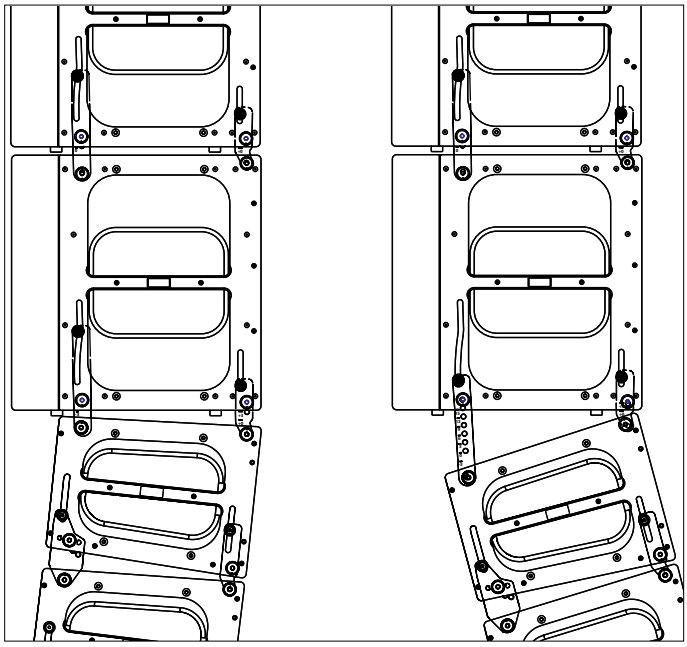

*Figure 7.5. 600-HP to MICA flown configuration maximum angles*

### *Ground-stacked*

When MICAs are ground-stacked above the 600-HP, the GuideALinks in MICA allow the same combinations as when a MICA is linked with another MICA but it will create uptilt instead of downtilt. The use of the +7 position on the front GuideALink is not recommended.

Table 7.4. MICA Link Positions to 600-HP (ground-stacked)

| Rear | Front | Angle for MICA |
|---|---|---|
| 0 | 0 | 0° |
| 0.5 | 0 | 0.5° uptilt |
| 1 | 0 | 1° uptilt |
| 1.5 | 0 | 1.5° uptilt |
| 2 | 0 | 2° uptilt |
| 2.5 | 0 | 2.5° uptilt |
| 3 | 0 | 3° uptilt |
| 4 | 0 | 4° uptilt |
| 5 | 0 | 5° uptilt |
| 6 | 0 | 6° uptilt |

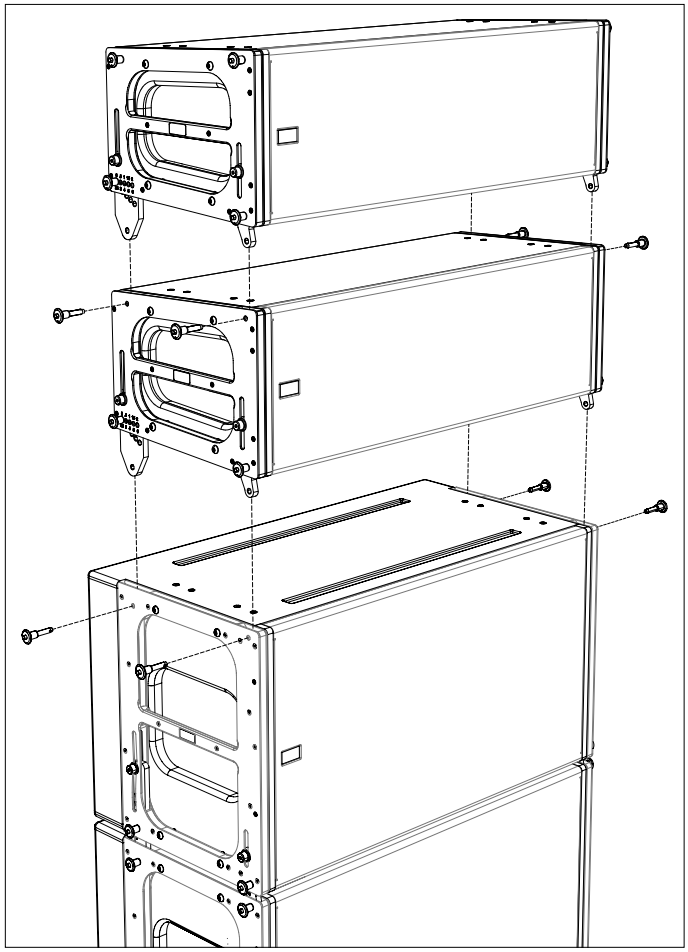

*Figure 7.6. 600-HP and MICA in a ground-stacked configuration*

**NOTE:** The optional MDTL-MICA downtilt link can be used between the top 600-HP and the first MICA in the ground-stacked array to add a fixed amount of downtilt to the MICA section. For more information, please see the MG-MICA Assembly Guide (part number 05.147.034.01).

## THE MG-MICA MULTIPURPOSE GRID

The MG-MICA multipurpose grid (Figure 7.7) allows multiple 600-HP subwoofers fitted with MRF-600 rigging frames and/or MICA compact high-power curvilinear array loudspeakers to be flown or ground-supported in numerous configurations. The subwoofer's MRF-600 GuideALink rigging is directly compatible with MICA, and links to both the grid and MICA enclosures using the same slots and pins.

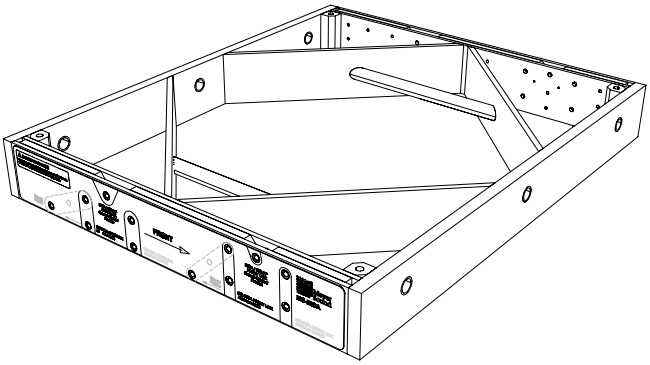

*Figure 7.7. The MG-MICA multipurpose grid*

**CAUTION:** For complete information on load ratings and how to set up the MG-MICA multipurpose grid, please use the MG-MICA Assembly Guide (part number 05.147.034.01) available at www.meyersound.com.

The MG-MICA grid can accommodate a variety of pickup configurations using its six pick-up points — three on the front and rear of the frame. In addition, the grid can be suspended from a single pickup point with the optional MGCP-MICA center point rigging beam.

600-HP subwoofers equipped with the optional MRF-600 rigging frame can be linked directly to the MG-MICA grid to form flown and ground-stacked arrays.

### Flown Configuration

The 600-HP rigging frame receives the MG-MICA grid links exactly the same way as MICA (Figure 7.8). For complete information on front and rear configurations as well as load ratings please refer to the MG-MICA Assembly Guide (part number 05.147.034.01) available on www.meyersound.com.

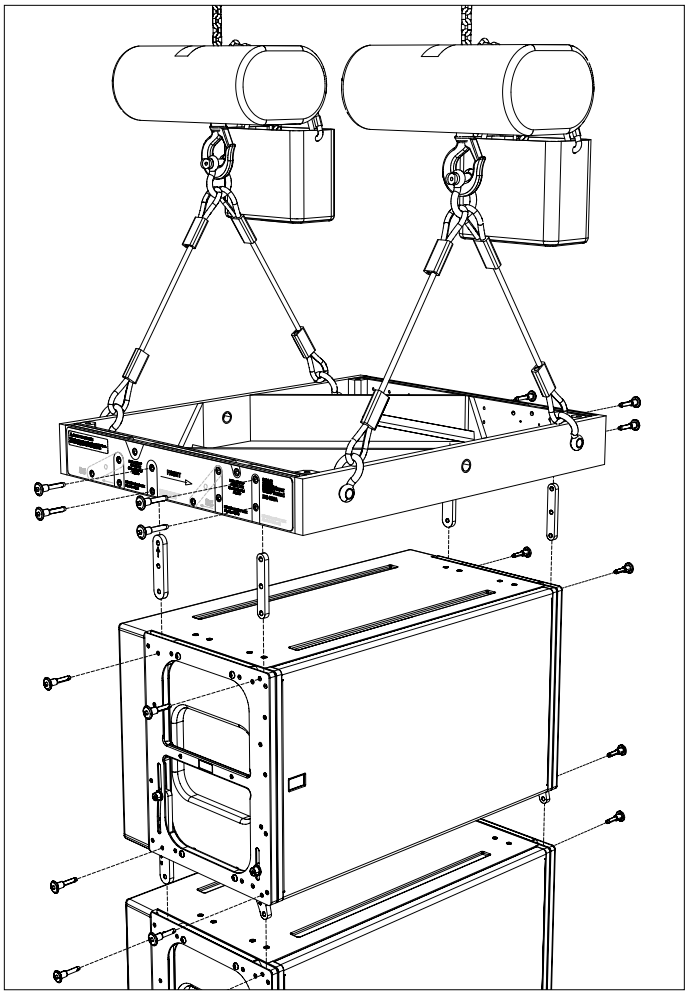

*Figure 7.8. Using the MG-MICA to fly a 600-HP array*

**CAUTION:** The weight of the 600-HP fitted with rigging is 215 lbs (97.52 kg). Never exceed the load rating of the MG-MICA grid.

## Ground-Stacked Configuration

The MG-MICA ground-stacked pockets receive the 600-HP links directly (Figure 7.9). Many combinations are possible; the most common are listed in the table below.

**Table 7.5. 600-HP Link Positions to MG-MICA Grid (ground-stacked)**

| Rear | Front | Angle for 600-HP with respect to the MG-MICA grid |
|---|---|---|
| -3 | 0 | 0.5° uptilt |
| 0 | 0 | 2.5° downtilt |
| 6 | +3 | 0.5° uptilt |

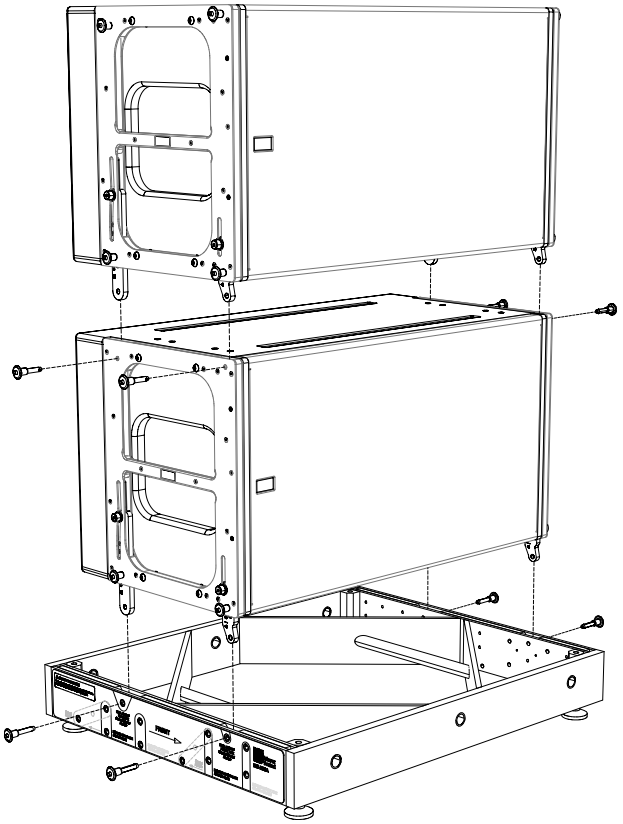

*Figure 7.9. Using the MG-MICA to support a 600-HP ground-stack*

## THE OPTIONAL MDTL-MICA DOWNTILT LINK

The MDTL-MICA downtilt link adds a fixed amount of downtilt to ground-stacked MICA loudspeakers. The versatile MDTL-MICA links connect to the rear GuideALinks of the bottom MICA and can be used to downtilt MICAs when they are ground-stacked on top of the MG-MICA or the 600-HP subwoofer.

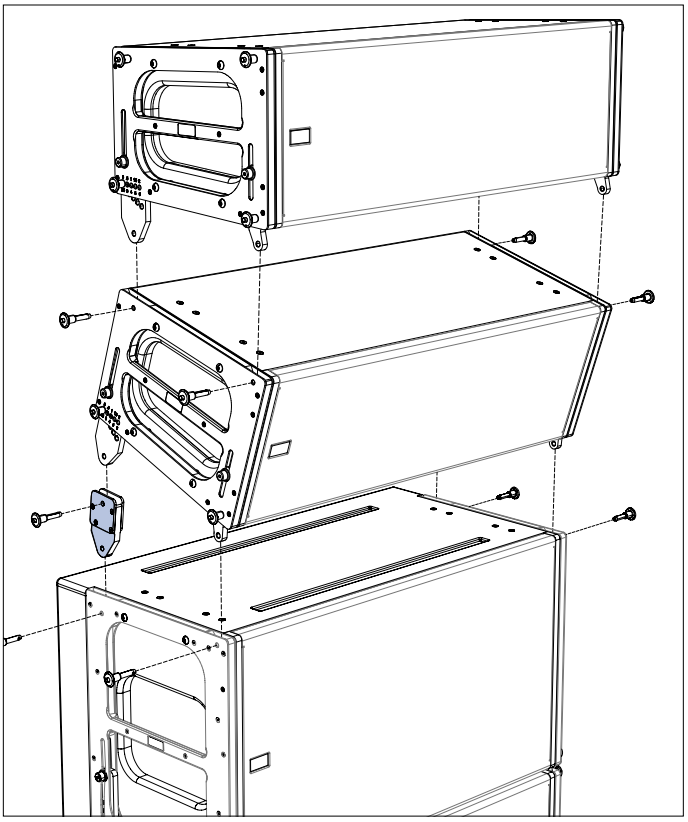

*Figure 7.10. The MDTL-MICA can be used to downtilt MICA loudspeakers when ground-stacked on top of the MG-MICA or the 600-HP*

For complete information on the optional MDTL-MICA please refer to MG-MICA Assembly Guide (part number 05.147.034.01)

## MCF-MICA CASTER FRAME

The heavy-duty MCF-MICA caster frame (Figure 7.11) allows you to transport stacks of up to three 600-HP subwoofers fitted with MRF-600 rigging frames. The 600-HP's GuideALinks are fully compatible with the optional MCF-MICA caster frame and connect the enclosures securely, allowing the convenient transport of straight stacks of subwoofers. The MCF-MICA's rugged steel frame facilitates the use of forklifts.

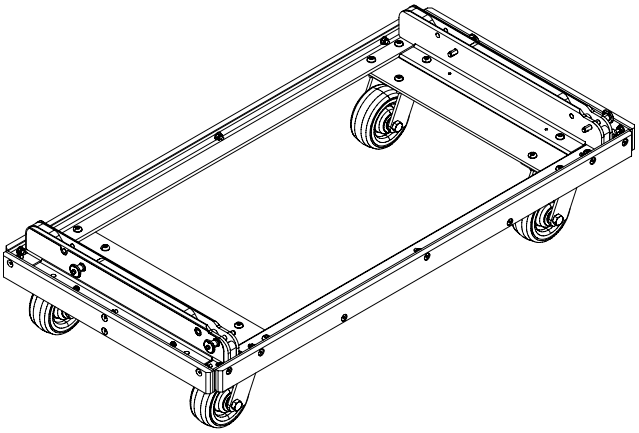

*Figure 7.11. The MCF-MICA caster frame*

Whether you're deploying or striking an array, the MCF-MICA can temporarily support its weight — making it easy to assemble or disassemble the array in stacks of up to three 600-HPs.

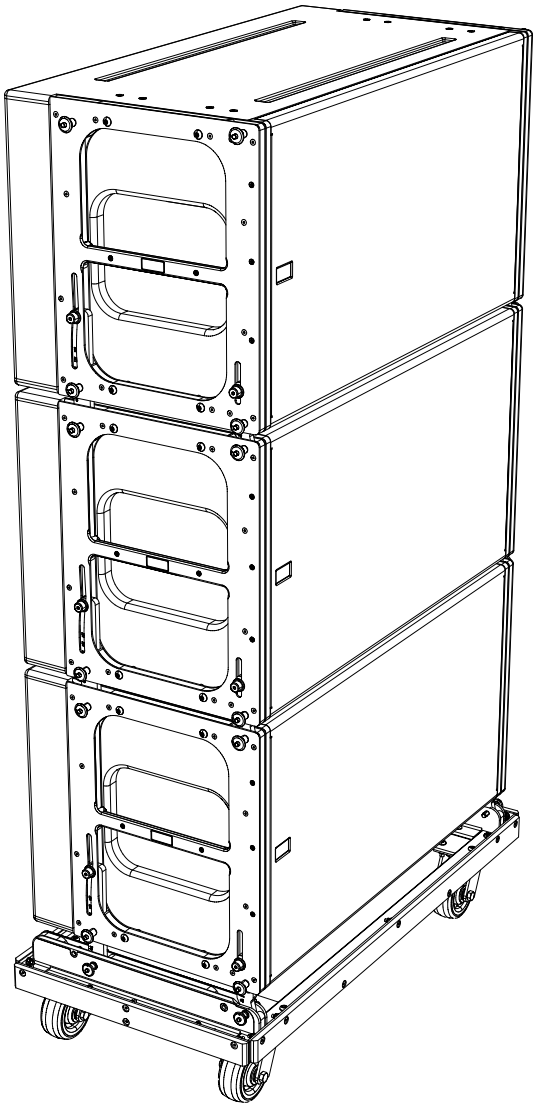

*Figure 7.12. 600-HPs on the MCF-MICA caster frame*

**CAUTION:** Do not exceed three 600-HP subwoofers high to avoid tipping over the stack.

**CAUTION:** Avoid moving the 600-HP stack in the front-to-back direction of the subwoofers (the long side); always move the stack sideways to avoid tipping it over.

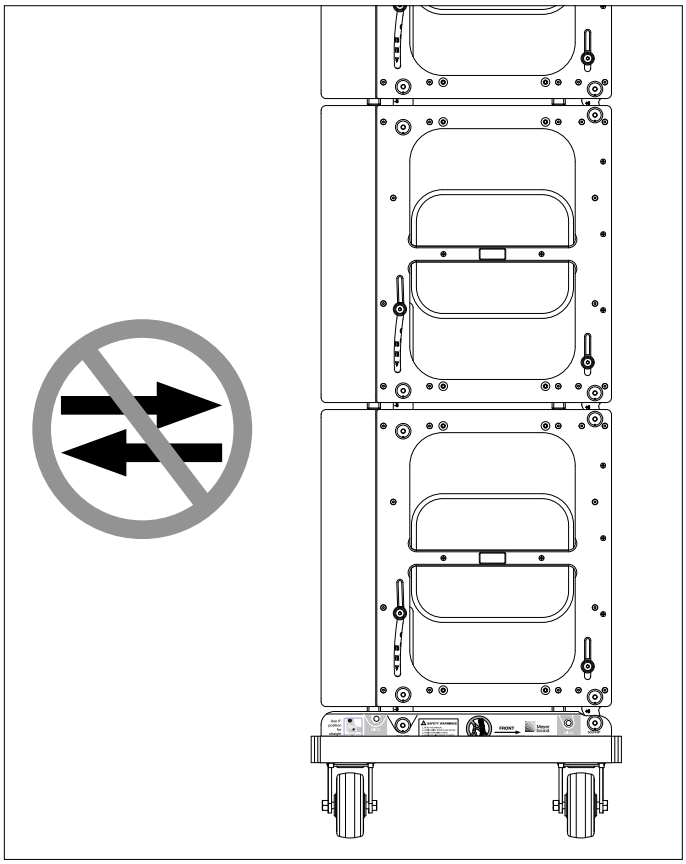

*Figure 7.13. The 600-HP stack should only be moved sideways when being transported on the MCF-MICA caster frame*

In order to transport stacks of 600-HP subwoofers as safely as possible, the MCF-MICA has two positions — one for the 600-HP and one for MICA. The 600-HP position allows the stack to have its center of gravity as close as possible to the center of the caster frame.

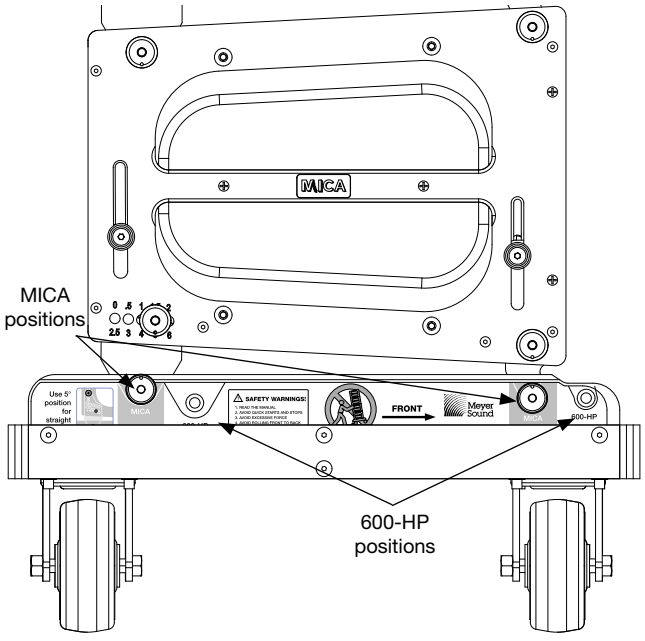


*Figure 7.14. 600-HP and MICA positions on the MCF-MICA*

**CAUTION:** Avoid using the 600-HP front or rear link in the extended position (+3 in front and any setting other than 0 in the rear) when transporting the subwoofers on the MCF-MICA to avoid tipping over the stack.

**TIP:** The MG-MICA grid can travel installed on top of a 600-HP subwoofer stack.

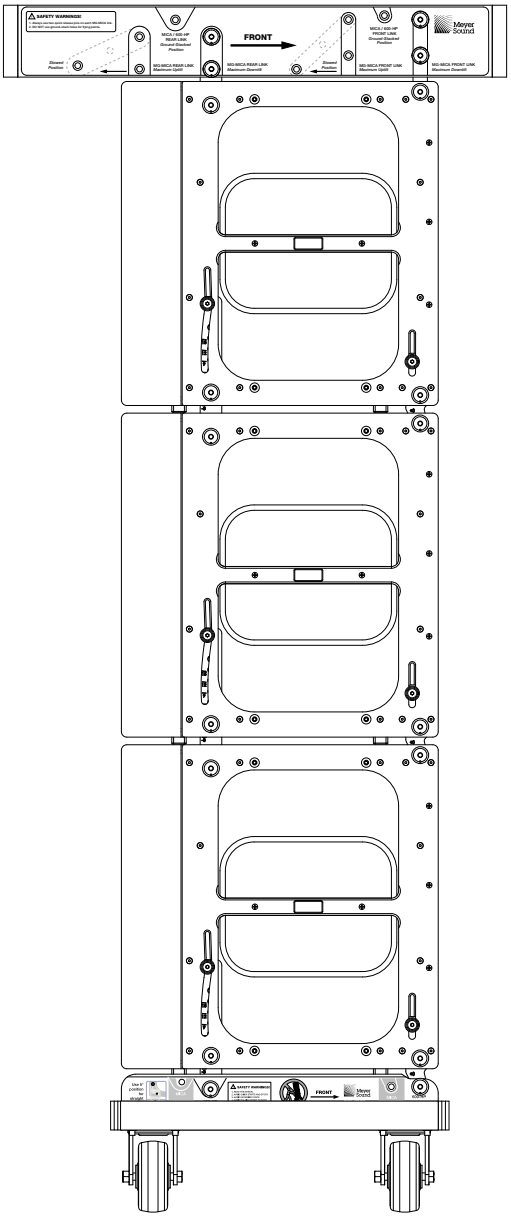


*Figure 7.16. The MG-MICA grid can be installed on top of a 600-HP ground-stack for transport*

The MCF-MICA also allows 600-HP subwoofers to be supported in a ground-stacked configuration.

**CAUTION:** When using the MCF-MICA caster frame to ground-stack 600-HP subwoofers, make sure all four caster wheels are blocked to prevent the stack from rolling away.

## MDB-600 DOLLY BOARD

The MDB-600 dolly board is the alternative to transports up to three 600-HP when not fitted with the MRF-600 rigging frame. The MDB-600 dolly board is easy to use making it easy to transport subwoofers in blocks of up to three 600-HP subwoofers.

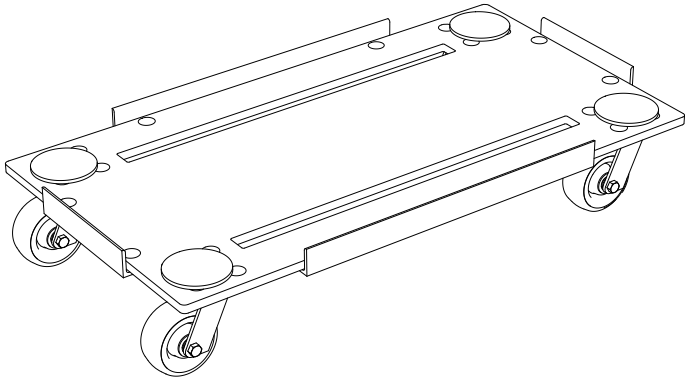

*Figure 7.16. MDB-600 dolly board*

**CAUTION:** Do not exceed three 600-HP subwoofers high on a block to avoid tipping over the stack.

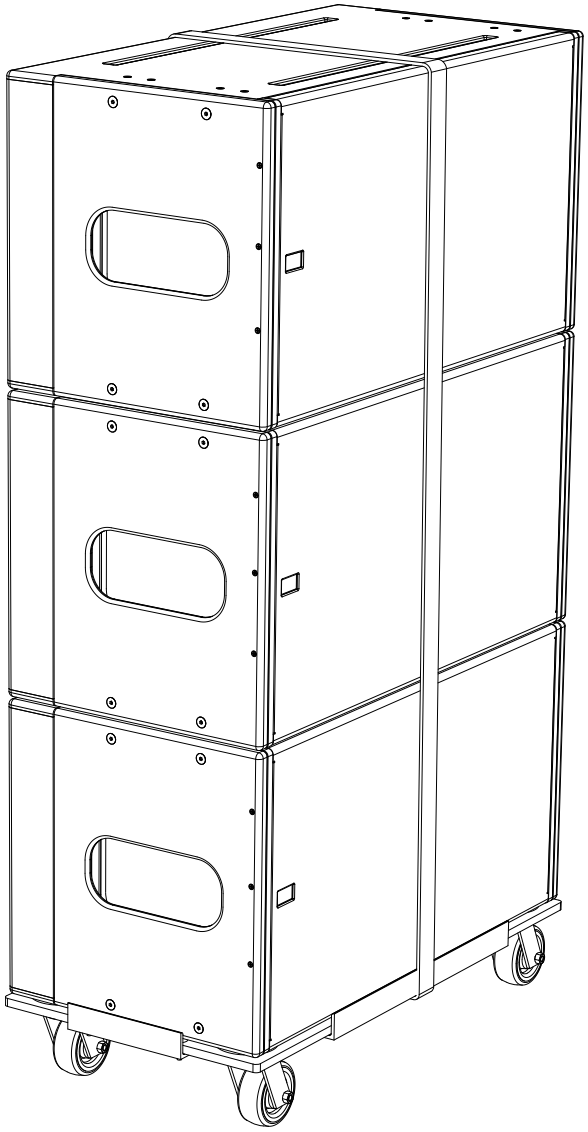

Figure 7.17. Three 600-HP on the MDB-600 with strap

**NOTE:** For safety reasons and to avoid any damage to the enclosures, use straps (as shown in Figure 7.17) when transporting a stack, especially if the cabinets are not fitted with the MRF-600 rigging frame. The MDB-600 includes slots on the sides for this purpose.

In addition to transport, the MDB-600 supports 600-HP subwoofers in a ground-stacked configuration.

**CAUTION:** When using the MDB-600 dolly board to ground-stack 600-HP subwoofers, make sure all four caster wheels are blocked to prevent the stack from rolling away.

Other rigging accessories as well as a range of rugged protective transport covers are also available. For more information, please visit www.meyersound.com.

# APPENDIX A: AMPLIFIER REPLACEMENT AND OPTIONAL RAIN HOOD

## USING THE RAIN HOOD (WEATHER-PROTECTED LOUDSPEAKERS)

If your 600-HP loudspeaker was ordered with optional weather protection, a rain hood is provided to protect the loudspeaker's electronics from direct exposure to rainfall. The rain hood frame will be pre-installed. Before using the 600-HP loudspeaker, install the rain hood as described in the following procedure.

1. On the rear of the enclosure, position the transparent polycarbonate rain hood against the rain hood frame that surrounds the amplifier user panel; make sure that the gasket is in place around the inside edge of the hood.
2. Line up the wing-nut clips with the holes in the rain-hood frame, press in one on the left and right side, and twist a quarter turn clockwise.
3. Press in and twist the remaining four clips on the sides and top of the rain hood.

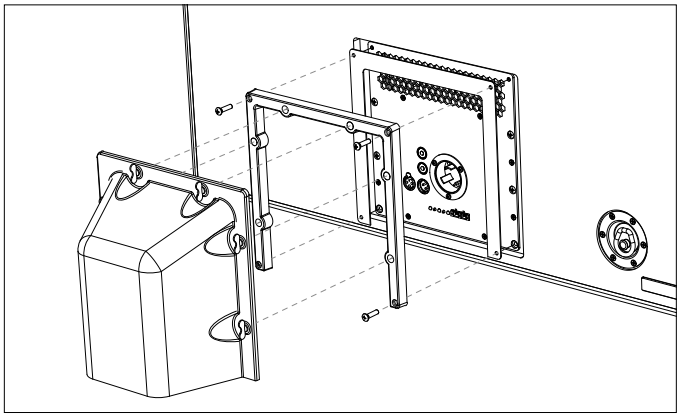

*Figure A.1. Polycarbonate rain hood and frame*

## REMOVING THE HP-2/600 AMPLIFIER

If you need to remove the amplifier from a 600-HP subwoofer, perform the following steps:

1. Using a #2 Phillips screwdriver, remove all eight screws from the amplifier module. This will free the HP-2/600 electronics module from the cabinet (Figure A.3). If the rainhood frame is installed, remove the frame from the user panel.

**CAUTION:** Make sure to disconnect the AC mains from amplifier before removing it from the enclosure.

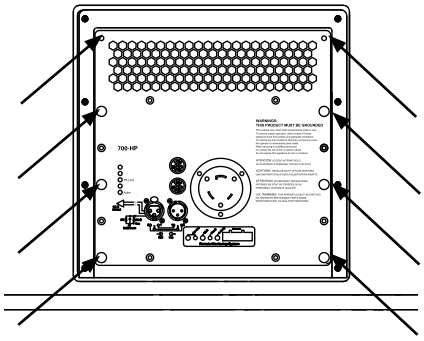

*Figure A.2. Location of the eight screws securing the HP-2/600 amplifier module*

2. Carefully slide the amplifier module out of the cabinet using care not to stress the cables.
3. Disconnect the 4-pin loudspeaker connector.

### Replacing the HP-2/600 Amplifier

To replace the amplifier, do the following:

1. Gently slide the amplifier partially back into 600-HP and connect the loudspeaker connector.

**TIP:** Avoid pinching wires behind the fans; if necessary, reach in and guide the wire(s) toward you as you slide the amplifier into place.

2. Start all eight screws into the holes before tightening them.
3. Once all eight screws are started, tighten them using a #2 Phillips screwdriver.
4. Tighten the inner four screws first, then tighten the remaining four corners.

**NOTE:** If the rainhood frame needs to be installed, start and tigthen only the 4 inner screws, then attach the frame to the user panel using the long screws for the corners

**CAUTION:** Never use power tools in high torque settings to remove or replace the stainless steel amplifier and/or rain hood screws on the 600-HP loudspeaker.

# APPENDIX B: 600-HP SPECIFICATIONS

| | |
|---|---|
| **ACOUSTICAL** | |
| Operating frequency range | 36 Hz - 150 Hz |
| | **Note:** Recommended maximum operating frequency range. Response depends upon loading conditions and room acoustics. |
| Frequency response | 39 Hz - 130 Hz ±4 dB |
| | **Note:** Free field, measured with 1/3 octave frequency resolution at 4 meters. |
| Phase response | 46 Hz - 120 Hz ±30° |
| Maximum peak SPL | 138 dB |
| | **Note:** Measured with music, referred to 1 meter, half-space loading. |
| Dynamic range | >110 dB |
| Coverage | 360° (single unit); varies with number of units and configuration |
| **TRANSDUCERS** | |
| Low frequency | Two 15" cone drivers<br>Nominal impedance: 4 Ω<br>Voice coil size: 4"<br>Power-handling capability: 1200 W (AES) |
| | **Note:** Power handling is measured under AES standard conditions: transducer driven continuously for two hours with band limited noise signal having a 6 dB peak-average ratio. |
| **AUDIO INPUT** | |
| Type | Differential, electronically balanced |
| Max. common mode range | ±15 V DC, clamped to earth for voltage transient protection |
| Connectors | Female XLR input with male XLR loop output or VEAM all-in-one (integrates AC, audio & network) |
| Input impedance | 10 kΩ differential between pins 2 and 3 |
| Wiring | Pin 1: Chassis/earth through 220 kΩ, 1000 pF, 15 V clamp network to provide virtual ground lift at audio frequencies<br>Pin 2: Signal +<br>Pin 3: Signal -<br>Case: Earth ground and chassis |
| DC Blocking | None on input, DC blocked through signal processing |
| CMRR | >50 dB, typically 80 dB (50 Hz – 500 Hz) |
| RF filter | Common mode: 425 kHz; Differential mode: 142 kHz |
| TIM filter | Integral to signal processing (<80 kHz) |
| Nominal input sensitivity | 0 dBV (1 V rms, 1.4 V pk) continuous is typically the onset of limiting for noise and music. |
| Input level | Audio source must be capable of producing a minimum of +20 dBV (10 V rms, 14 V pk) into 600 ohms in order to produce maximum peak SPL over the operating bandwidth of the loudspeaker. |
| **AMPLIFIER** | |
| Amplifier type | Two-channel complementary power MOSFET output stages (class AB/H) |
| Output power | 2250 W (4500 W peak) |
| | **Note:** *Amplifier wattage rating* based on the maximum unclipped burst sine-wave rms voltage that the amplifier will produce for at least 0.5 seconds into the nominal load impedance: both channels 67 V rms into 4 ohms. *Peak power* based on the maximum unclipped peak voltage that the amplifier will produce for at least 100 milliseconds into the nominal load impedance: both channels 95 V pk into 4 ohms. |
| THD, IM TIM | < .02% |
| Load capacity | 4 Ω each channel |
| Cooling | Forced air cooling, two fans (one ultrahigh-speed reserve fan) |

| | |
|---|---|
| **AC POWER** | |
| AC power connector | 250 V NEMA L6-20 (twist lock), IEC 309 male inlet, PowerCon, or VEAM |
| Voltage selection | Automatic, two ranges, each with high-low voltage tap |
| Safety agency rated operating voltage | 95 V AC - 125 V AC; 208 V AC - 235 V AC; 50/60 Hz |
| Turn on/turn off points | 85 V AC - 134 V AC; 165 V AC - 264 V AC; 50/60 Hz |
| *Current Draw* | |
| Idle current | 0.64 A rms (115 V AC); 0.32 A rms (230 V AC); 0.85 A rms (100 V AC) |
| Max. long-term continuous current (>10 sec) | 8.8 A rms (115 V AC); 4.4 A rms (230 V AC); 10 A rms (100 V AC) |
| | **Note:** Measured using pink noise as an input signal. |
| Burst Current (<1 sec) | 19 A rms (115 V AC); 9.5 A rms (230 V AC); 22 A rms (100 V AC) |
| | **Note:** AC power cabling must be of sufficient gauge so that under burst current rms conditions, cable transmission losses do not drop voltage below specified operating range at the speaker. |
| Ultimate Short-Term Peak Current Draw | 39 A pk (115 V AC); 20 A pk (230 V AC); 45 A pk (100 V AC) |
| Inrush Current | 7 A pk (115 V AC); 7 A pk (230 V AC); 10 A pk (100 V AC) |
| **RMS NETWORK** (Standard with rigging version and optional with others) | |
| | Equipped for two-conductor twisted-pair network, reporting all operating parameters of amplifiers to system operator's host computer. |
| **PHYSICAL** | |
| Enclosure | Premium birch plywood |
| Finish | Black textured |
| Protective grille | Perforated metal grille lined with acoustical black mesh |
| Dimensions | 41.4" w x 22.5" h x 22" d (1052 mm x 572 mm x 559 mm) |
| Weight | 182 lb (82.55 kg); with rigging 215 lb (97.52 kg) |
| Rigging | Optional end-mounted QuickFly rigging hardware, with captive GuideALinks and quick-release pins; compatible with MICA compact highpower curvilinear array loudspeakers and accessories |

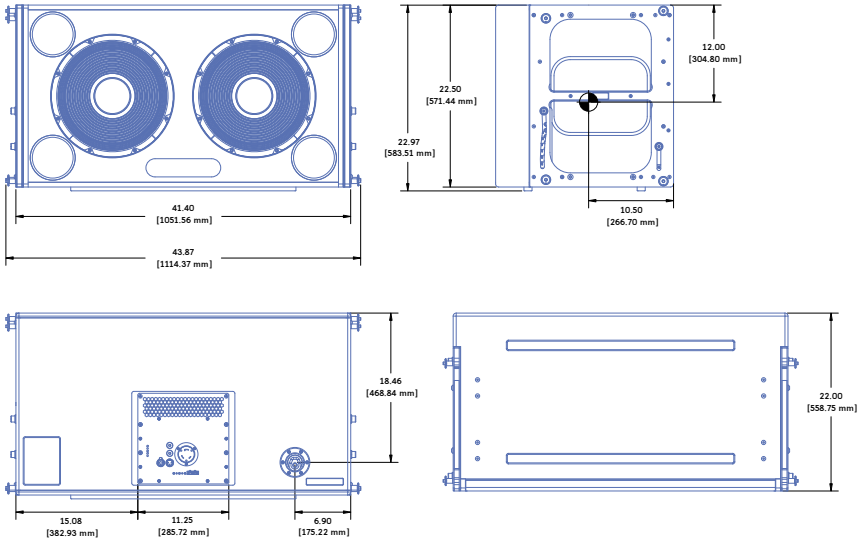



Meyer Sound Laboratories Inc.
2832 San Pablo Avenue
Berkeley, CA 94702

www.meyersound.com
T: +1 510 486.1166
F: +1 510 486.8356

© 2006
Meyer Sound Laboratories Inc.
05.149.005.01 A