OPERATING INSTRUCTIONS

500-HP Compact High-Power Subwoofer

thinking sound Meyer Sound



Keep these important operating instructions.
Check www.meyersound.com for updates.

DECLARATION OF CONFORMITY ACCORDING TO ISO/IEC GUIDE 22 AND EN 45014

Manufacturer's Name:
Meyer Sound Laboratories Inc.

Manufacturer's Address:
2832 San Pablo Avenue
Berkeley, CA 94702-2204, USA

Declares that the products
Product Name: 500-HP
Product Options: All

Conforms to the following Product Specifications
Safety: IEC 60065: 2005
EN 60065: 2002
EMC: EN 55103-1: 1997 emission (1)
EN 55103-2: 1997 immunity (2)

This device complies with EN 55103-1 & -2. Operation is subject to the following two conditions:
(1) this device may not cause harmful interference, and
(2) this device must accept any interference received, including interference that may cause undesired operation.

Supplementary Information
The product herewith complies with the requirements of the Low Voltage Directive (LVD) 2006/95/EC and the EMC Directive 2004/108/EC.

Office of Quality Manager
Berkeley, California USA
February 11, 2009

European Contact: Your local Meyer Sound dealer or Meyer Sound Germany, GmbH. Horresser Berg 4A, 56410 Montabaur, Germany.

Environmental specifications for Meyer Sound Electronics products

Operating Temperature	0° C to +45° C
Non operating Temperature	<–40° C or >+75° C
Humidity	to 95% at 35° C
Operating Altitude	to 4600 m (15,000 ft)
Non operating Altitude	to 6300 m (25,000 ft)
Shock	30 g 11 msec half-sine on each of 6 sides
Vibration	10 Hz – 55 Hz (0.010 m peak-to-peak excursion)

CE
www.meyersound.com
Made in USA with domestic and foreign parts

TÜV Rheinland of North America, Inc. C US

N775

© 2009
Meyer Sound. All rights reserved.
500-HP Operating Instructions

The contents of this manual are furnished for informational purposes only, are subject to change without notice, and should not be construed as a commitment by Meyer Sound Laboratories Inc. Meyer Sound assumes no responsibility or liability for any errors or inaccuracies that may appear in this manual. Except as permitted by applicable copyright law, no part of this publication may be reproduced, stored in a retrieval system, or transmitted, in any form or by any means, electronic, mechanical, recording or otherwise, without prior written permission from Meyer Sound.

Compass, Intelligent AC, MAPP Online Pro, RMS, UltraSeries, QuietCool, and all alpha-numeric designations for Meyer Sound products and accessories are trademarks of Meyer Sound. Galileo, Meyer Sound, QuickFly, and SIM are registered trademarks of Meyer Sound Laboratories Inc. (Reg. U.S. Pat. & Tm. Off.). All third-party trademarks mentioned herein are the property of their respective trademark holders.

Printed in the USA.

Part Number: 05.187.045.01, Rev. A

SYMBOLS USED

These symbols indicate important safety or operating features in this booklet and on the chassis:

			
Dangerous voltages: risk of electric shock	Important operating instructions	Frame or chassis	Protective earth ground
Pour indiquer les risques résultant de tensions dangereuses	Pour indequer important instructions	Masse, châssis	Terre de protection
Warnung vor gefährlicher elektrischer Spannung	Wichtige Betriebsanweisung oder Gebrauchsanleitung	Rahmen oder Gehäuse	Masse Schutzleiter
Para indicar voltajes peligrosos	Instrucciones importantes de funcionamiento y/o manteniento	Armadura o chassis	Tierra proteccionista

IMPORTANT SAFETY INSTRUCTIONS

1. Read these instructions.
2. Keep these instructions.
3. Heed all warnings.
4. Follow all instructions.
5. Do not use this loudspeaker near water.
6. Clean only with dry cloth.
7. Do not block any ventilation openings. Install in accordance with Meyer Sound's installation instructions.
8. Do not install near any heat sources such as radiators, heat registers, stoves, or other apparatus that produce heat.
9. Do not defeat the safety purpose of the grounding-type plug. A grounding type plug has two blades and a third grounding prong. The third prong is provided for your safety. If the provided plug does not fit into your outlet, consult an electrician for replacement of the obsolete outlet.
10. Protect the power cord from being walked on or pinched, particularly at plugs, convenience receptacles, and the point where they exit from the loudspeaker. The AC mains plug or appliance coupler shall remain readily accessible for operation.
11. Only use attachments/accessories specified by Meyer Sound.
12. Use only with the caster rails or rigging specified by Meyer Sound, or sold with the loudspeaker. Handles are for carrying only.

    ⚠ **CAUTION:** Rigging should only be done by experienced professionals.

13. Unplug this loudspeaker during lightning storms or when unused for long periods of time.
14. Refer all servicing to qualified service personnel. Servicing is required when the loudspeaker has been damaged in any way, such as when the power-supply cord or plug has been damaged; liquid has been spilled or objects have fallen into the loudspeaker; rain or moisture has entered the loudspeaker; the loudspeaker has been dropped; or when for undetermined reasons the loudspeaker does not operate normally.

SAFETY SUMMARY

English

- To reduce the risk of electric shock, disconnect the loudspeaker from the AC mains before installing audio cable. Reconnect the power cord only after making all signal connections.
- Connect the loudspeaker to a two-pole, three-wire grounding mains receptacle. The receptacle must be connected to a fuse or circuit breaker. Connection to any other type of receptacle poses a shock hazard and may violate local electrical codes.
- Do not install the loudspeaker in wet or humid locations without using weather protection equipment from Meyer Sound.
- Do not allow water or any foreign object to get inside the loudspeaker. Do not put objects containing liquid on or near the unit.
- To reduce the risk of overheating the loudspeaker, avoid exposing it to direct sunlight. Do not install the unit near heat-emitting appliances, such as a room heater or stove.
- This loudspeaker contains potentially hazardous voltages. Do not attempt to disassemble the unit. The unit contains no user-serviceable parts. Repairs should be performed only by factory-trained service personnel.

Français

- Pour réduire le risque d'électrocution, débrancher la prise principale de l'haut-parleur, avant d'installer le câble d'interface allant à l'audio. Ne rebrancher le bloc d'alimentation qu'après avoir effectué toutes les connections.
- Branchez l'haut-parleur dans une prise de courant à 3 dérivations (deux pôles et la terre). Cette prise doit être munie d'une protection adéquate (fusible ou coupe-circuit). Le branchement dans tout autre genre de prise pourrait entraîner un risque d'électrocution et peut constituer une infraction à la réglementation locale concernant les installations électriques.
- Ne pas installer l'haut-parleur dans un endroit où il y a de l'eau ou une humidité excessive.
- Ne pas laisser de l'eau ou tout objet pénétrer dans l'haut-parleur. Ne pas placer de r´cipients contenant un liquide sur cet appareil, ni à proximité de celui-ci.
- Pour éviter une surchauffe de l'haut-parleur, conserver-la à l'abri du soleil. Ne pas installer à proximité d'appareils dégageant de la chaleur tels que radiateurs ou appareils de chauffage.
- Ce haut-parleur contient des circuits haute tension présentant un danger. Ne jamais essayer de le démonter. Il n'y a aucun composant qui puisse être réparé par l'utilisateur. Toutes les réparations doivent être effectuées par du personnel qualifié et agréé par le constructeur.

Deutsch

- Um die Gefahr eines elektrischen Schlages auf ein Minimum zu reduzieren, den Lautsprecher vom Stromnetz trennen, bevor ggf. ein Audio-Schnittstellensignalkabel angeschlossen wird. Das Netzkabel erst nach Herstellung aller Signalverbindungen wieder einstecken.
- Der Lautsprecher an eine geerdete zweipolige Dreiphasen-Netzsteckdose anschließen. Die Steckdose muß mit einem geeigneten Abzweigschutz (Sicherung oder Leistungsschalter) verbunden sein. Der Anschluß der unterbrechungsfreien Stromversorgung an einen anderen Steckdosentyp kann zu Stromschlägen führen und gegen die örtlichen Vorschriften verstoßen.
- Der Lautsprecher nicht an einem Ort aufstellen, an dem sie mit Wasser oder übermäßig hoher Luftfeuchtigkeit in Berührung kommen könnte.
- Darauf achten, daß weder Wasser noch Fremdkörper in das Innere den Lautsprecher eindringen. Keine Objekte, die Flüssigkeit enthalten, auf oder neben die unterbrechungsfreie Stromversorgung stellen.
- Um ein Überhitzen dem Lautsprecher zu verhindern, das Gerät vor direkter Sonneneinstrahlung fernhalten und nicht in der Nähe von wärmeabstrahlenden
- Haushaltsgeräten (z.B. Heizgerät oder Herd) aufstellen.
- Im Inneren diesem Lautsprecher herrschen potentiell gefährliche Spannungen. Nicht versuchen, das Gerät zu öffnen. Es enthält keine vom Benutzer reparierbaren Teile. Reparaturen dürfen nur von ausgebildetem Kundenienstpersonal durchgeführt werden.

Español

- Para reducir el riesgo de descarga eléctrica, desconecte de la red de voltaje el altoparlante antes de instalar el cable de señal de audio. Vuelva a conectar la alimentacion de voltaje una vez efectuadas todas las interconexiones de señalizacion de audio.
- Conecte el altoparlante a un tomacorriente bipolar y trifilar con neutro de puesta a tierra. El tomacorriente debe estar conectado a la protección de derivación apropiada (ya sea un fusible o un disyuntor). La conexión a cualquier otro tipo de tomacorriente puede constituir peligro de descarga eléctrica y violar los códigos eléctricos locales.
- No instale el altoparlante en lugares donde haya agua o humedad excesiva.
- No deje que en el altoparlante entre agua ni ningún objeto extraño. No ponga objetos con líquidos encima de la unidad ni cerca de ella.
- Para reducir el riesgo de sobrecalentamiento, no exponga la unidad a los rayos directos del sol ni la instale cerca de artefactos que emiten calor, como estufas o cocinas.
- Este altoparlante contiene niveles de voltaje peligrosos en potencia. No intente desarmar la unidad, pues no contiene piezas que puedan ser reparadas por el usuario. Las reparaciones deben efectuarse únicamente por parte del personal de mantenimiento capacitado en la fábrica.

CONTENTS

Chapter 1: Introduction 7

How to Use This Manual 7
Introducing the 500-HP Subwoofer 7

Chapter 2: Power Requirements 11

AC Power Distribution 11
The AC Connectors 11
Power Connector Wiring 12
500-HP Voltage Requirements 12
500-HP Current Requirements 13
Electrical Safety Issues 14

Chapter 3: Amplification and Audio 15

Audio Connections with VEAM Cabling 15
Audio Input Modules 15
Amplifier Cooling System 18

Chapter 4: Integrating 500-HP Subwoofers 19

Integrating 500-HP Subwoofers with Meyer Sound Loudspeaker Systems 19
Daisy-Chaining 500-HP Subwoofers with Loudspeakers 20
Driving 500-HP Subwoofers and Loudspeakers with Line Drivers 20
Digital Signal Processors and 500-HP subwoofers 21
The Galileo® Loudspeaker Management System 21

Chapter 5: QuickFly® Rigging 23

The MRF-500 Rigging Frame with GuideALinks 23
Groundstacking 500-HPs 24
The MG-M'elodie Grid 25
500-HP with Flown Loudspeakers 27
500-HP Cardioid Arrays 30
The MCF-500 Caster Frame 30
Pole-Mount Receptacle 31

Chapter 6: The RMS Remote Monitoring System 33

The RMS Software 33
The RMS Module 34
Resetting the RMS Module 35

Chapter 7: System Design and Integration Tools 37

MAPP Online Pro 37
The SIM® 3 Measurement System 38

Appendix A: Optional VEAM Multipin Connector 39

Appendix B: Optional Rain Hood 41

Appendix C: Specifications 43

CHAPTER 1: INTRODUCTION

HOW TO USE THIS MANUAL

Make sure to read these operating instructions in their entirety before configuring a loudspeaker system with 500-HP subwoofers. In particular, pay close attention to material related to safety issues.

As you read these operating instructions, you will encounter the following icons for notes, tips, and cautions:

NOTE: A note identifies an important or useful piece of information relating to the topic under discussion.

TIP: A tip offers a helpful tip relevant to the topic at hand.

CAUTION: A caution gives notice that an action may have serious consequences and could cause harm to equipment or personnel, and could cause delays or other problems.

Information and specifications are subject to change. Updates and supplementary information are available on the Meyer Sound website:

http://www.meyersound.com

Meyer Sound Technical Support is available at:

- **Tel:** +1 510 486.1166
- **Fax:** +1 510 486.8356
- **Email:** techsupport@meyersound.com

INTRODUCING THE 500-HP SUBWOOFER

The 500-HP is a compact, high-output subwoofer that integrates smartly with other Meyer Sound loudspeakers, enhancing the low-frequency headroom in a variety of full-range systems. Suitable for both fixed installations and touring applications, the 500-HP is available in two versions:

- With side panels including handles



- With QuickFly® MRF-500 rigging frames



When outfitted with the optional MRF-500 rigging frame, the 500-HP can be arrayed with other 500-HPs and M'elodie™ curvilinear array loudspeakers, in either flown or ground-stacked configurations. The rigging frame also allows the 500-HP to be configured in cardioid arrays. All 500-HP's come standard with an integral pole-mount receptacle that

allows the subwoofer to be easily paired with UltraSeries™ loudspeakers. Also included with all 500-HPs are durable plastic bottom skids that protect the enclosure and align with its top slots for secure stacking.

The 500-HP boasts an operating frequency range of 35 Hz to 140 Hz and a peak SPL of 135 dB. Designed and manufactured at Meyer Sound's Berkeley, California headquarters, the 500-HP's two 12-inch cone drivers are engineered for extreme efficiency at low frequencies. The high-excursion, low frequency drivers, each with 4-inch voice coils, are rated for up to 1200 W and housed in a tuned, rectangular enclosure that has the same width as M'elodie loudspeaker.



500-HP Rear Panel

The low frequency drivers are driven by a two-channel class AB/H amplifier with complementary MOSFET output stages. Ample headroom is delivered with 1800 W of total burst output (900 W per channel). The 500-HP's modular amplifier and processing electronics are equipped with Meyer Sound's Intelligent AC™ power supply, which adapts to any power voltage worldwide and provides soft-turn on and transient protection. The amplifier, control electronics, and power supply are field-replaceable modules located in the rear of the enclosure. The optional RMS™ remote monitoring system allows comprehensive monitoring of system parameters on Windows®-based computers.

The optional MRF-500 rigging frame uses captive, recessed GuideALinks™, located in the front, center, and rear of the frame, that allow the subwoofer to be securely arrayed with other loudspeakers (or safely stowed). A wide range of splay angles and configurations is achieved with different combinations of front, center, and back positions for the GuideALinks, which are easily adjusted with convenient, pinned handles and slots. The rigging frame can be attached to the MG-M'elodie multipurpose grid and accommodate a variety of flown configurations, including cardioid arrays. The rigging frame can also be used to suspend M'elodie arrays (when the 500-HP is attached to the MG-M'elodie grid), or they can be used for groundstacking M'elodies on top of the 500-HP.

The durable 500-HP enclosure is constructed of premium birch plywood and textured with a black, hard-shell finish. A hex-stamped, steel grille with acoustical black mesh protects the subwoofer's drivers. Other options include weather protection and custom color finishes for fixed installations and other applications with specific cosmetic requirements.



500-HP Groundstacked with M'elodies



MG-M'elodie Grid with 500-HP and M'elodie Array

CHAPTER 2: POWER REQUIREMENTS

The 500-HP subwoofer combines advanced loudspeaker technology with equally advanced power capabilities. Understanding power distribution, voltage and current requirements, as well as electrical safety issues, is critical to the safe operation of the 500-HP.

AC POWER DISTRIBUTION

All components in an audio system (self-powered loudspeakers, mixing consoles, and processors) must be properly connected to an AC power distribution system, ensuring that AC line polarity is preserved and that all grounding points are connected to a single node or common point using the same cable gauge as the neutral and line cables.

NOTE: Improper grounding of connections between loudspeakers and the rest of the audio system may produce noise or hum, or cause serious damage to the input and output stages of the system's electronic components.

CAUTION: Before applying AC power to any Meyer Sound self-powered loudspeaker, make sure that the voltage potential difference between the neutral and earth-ground lines is less than 5 V AC.

Figure 1 illustrates a basic three-phase AC distribution system with the loudspeaker load distributed across the three phases. All loudspeakers are connected to common neutral and earth-ground lines.

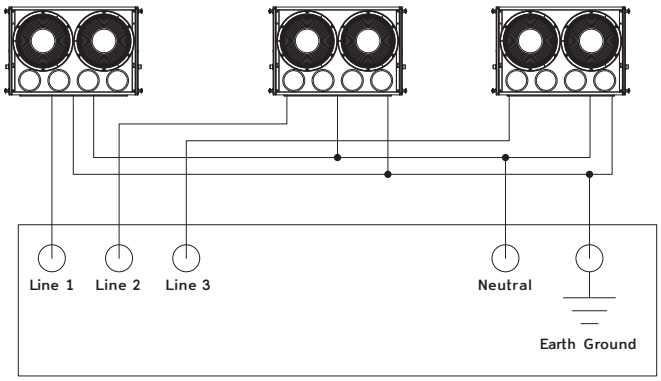

Figure 1: AC Power Distribution System

TIP: Since the 500-HP subwoofer does not require a dedicated neutral line, and it can tolerate elevated voltages from the ground line, it can be connected to line-line terminals in 120 V, 3-phase Wye systems. This results in 208 V AC between lines (nominal) and therefore draws less current than when using 120 V AC (line-neutral). Make sure that the voltage remains within the 500-HP's recommended operating windows (85–134 V AC and 165–264 V AC). The ground line must always be used for safety reasons and the line-to-ground voltage should never exceed 250 V AC (typically 120 V AC from line-to-ground).

THE AC CONNECTORS

The user panel on the back of the 500-HP includes the following PowerCon AC connectors:

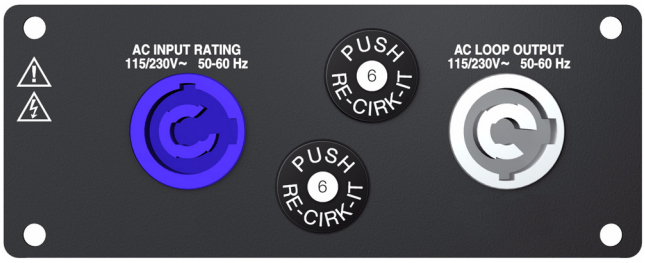

500-HP AC Input (left) and AC Loop Output (right) Connectors

The AC Input Connector (Blue)

The blue AC Input connector supplies power to the 500-HP. The connector is rated at 20 amps and uses a PowerCon3 AC mains locking connector that prevents accidental disconnections. A 10-foot AC power cable, rated at 15 amps, is included with each 500-HP. If you replace the included AC power cable, make sure to use a cable with the appropriate power plug (on the other end) for the region in which you will operate the unit.

The AC Input connector also supplies power to any additional loudspeakers connected to the 500-HP's gray Loop Output connector. Each 500-HP requires approximately 8 A rms maximum at 115 V AC and 4 A rms maximum at 230 V AC for proper operation.

CAUTION: When using the included AC power cable, do not loop more than one additional 500-HP from the AC Loop Output connector at 115 V (two total for the circuit), and not more than three at 230 V (four total for the circuit).

The AC Loop Output Connector (Gray)

The gray AC Loop Output connector allows multiple 500-HP subwoofers to be looped and powered from a single power source. Connect the AC Loop Output of the first 500-HP to the AC Input of the second 500-HP, and so forth. The AC Loop Output uses a PowerCon3 AC mains locking connector that prevents accidental disconnections.

The maximum number of subwoofers that can be looped from the Loop Output connector is determined by the voltage of the power source, the current draw of the looped subwoofers, the circuit breaker rating, and the rating of the AC power cable connected to the 500-HP.

Table 1: Number of 500-HPs that Can Be Looped with AC Power

Circuit Breaker/ Connector Rating	115 V AC	230 V AC	100 V AC
15 amps	1 looped 2 total)	3 looped (4 total)	0 looped (1 total)
20 amps	1 looped (2 total)	4 looped (5 total)	1 looped (2 total)

NOTE: The current draw for the 500-HP is dynamic and fluctuates as operating levels change. The numbers in Table 1 assume that operating levels are normal and not such that the subwoofers are constantly limiting.

Each 500-HP ships with one AC looping connector for making AC looping cables. Assembled AC looping cables are available from Meyer Sound.

CAUTION: Do not exceed the current capability of the 20-amp Input connector for the 500-HP. When looping loudspeakers, consider the total current draw for all loudspeakers on the circuit, *including* the first loudspeaker.

AC Connections with VEAM Cabling

The 500-HP can be ordered from the factory with a VEAM all-in-one connector. VEAM connectors consolidate AC power, audio, and RMS into a single cable, facilitating easy connections and quick setups. For more information, see Appendix A, “Optional VEAM Multipin Connector.”

POWER CONNECTOR WIRING

The 500-HP requires a grounded outlet. To operate safely and effectively, it is extremely important that the entire system be properly grounded.

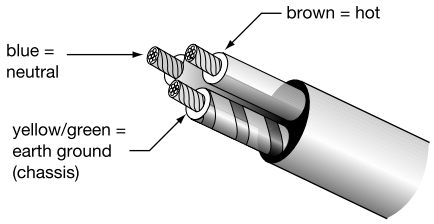

AC Cable Color Code

When wiring international or special-purpose power connectors:

- Connect the blue wire to the black terminal, or the terminal marked with an N.
- Connect the brown wire to the red terminal, or the terminal marked with an L.
- Connect the yellow and green wire to the green (or green and yellow) terminal, or the terminal marked with an E.

CAUTION: When creating AC power cables and distribution systems, it is important to preserve AC line polarity and connect the earth ground on both ends of the cable. The 500-HP requires a grounded connection. Always use a grounded outlet and plug. It is extremely important that the system be properly grounded to operate safely and properly. Do not ground-lift the AC cable.

500-HP VOLTAGE REQUIREMENTS

The 500-HP operates safely and continuously when the AC voltage stays within 85–134 V AC and 165–264 V AC at 50 or 60 Hz. The subwoofer allows any combination of voltage to GND (neutral-line-ground or line-line-ground).

If the voltage drops below 85 V (brownout), the 500-HP uses stored power to continue operating temporarily; the subwoofer will shut down if the voltage does not rise above the low boundary before the stored power is used.

If the voltage rises above 275 V, the power supply could become damaged.

⚠ **CAUTION:** The power source for the 500-HP should always operate within the required voltage range, at least a few volts from the upper and lower ranges. This will ensure that AC voltage variations from the service entry — or peak voltage drops due to cable runs — will not cause the loudspeaker's amplifiers to cycle on and off or cause damage to the power supply.

Powering Up the 500-HP

When AC power is applied to the 500-HP, its Intelligent AC™ power supply automatically selects the correct operating voltage, allowing it to be used internationally without manually setting voltage switches. In addition, Intelligent AC suppresses high-voltage transients up to several kilovolts, filters common mode and differential mode radio frequencies (EMI), and sustains operation temporarily during low-voltage periods.

When powering up the 500-HP, the following startup events take place over several seconds.

1. Audio output is muted.
2. Voltage is detected and the power supply mode is automatically adjusted as necessary.
3. The power supply ramps up.
4. The green On/Temp LED on the user panel lights up, indicating the loudspeaker is ready to output audio.

NOTE: The fan remains off at turn-on. It is controlled by audio level and operates only at high audio levels.

⚠ **CAUTION:** If the On/Temp LED does not light up, or the 500-HP does not output audio after ten seconds, remove AC power immediately and verify that the voltage is within the required range. If the problem persists, contact Meyer Sound Technical Support.

⚠ **CAUTION:** If either of the loudspeaker's circuit breakers trip (the white center buttons disengage), make sure to disconnect the AC power cable before resetting the breakers. If necessary, contact Meyer Sound for repair information.

500-HP CURRENT REQUIREMENTS

The current draw for the 500-HP is dynamic and fluctuates as operating levels change. Since different cables and circuit breakers heat up at varying rates, it is important to understand the following types of current ratings and how they affect circuit breaker and cable specifications.

- **Idle Current** — The maximum rms current during idle periods.
- **Maximum Long-Term Continuous Current** — The maximum rms current during a period of at least 10 seconds. The Maximum Long-Term Continuous Current is used to calculate temperature increases for cables, to ensure that cable sizes and gauges conform to electrical code standards. The current rating is also used as a rating for slow-reacting thermal breakers. In addition, the Maximum Long-Term Continuous Current can be used to calculate the AC looping capability of the 500-HP.
- **Burst Current** — The maximum rms current during a period of around one second. The Burst Current is used as a rating for magnetic breakers. It is also used for calculating the peak voltage drop in long AC cable runs according to the following formula:

  V pk (drop) = I pk x R (cable total)
- **Ultimate Short-Term Peak Current** — A rating for fast-reacting magnetic breakers.
- **Inrush Current** — The spike of initial current encountered when powering on.

You can use the following table as a guide for selecting cable gauges and circuit breaker ratings for the system's operating voltage.

500-HP Current Draw

Current Draw	115 V AC	230 V AC	100 V AC
Idle Current	0.49 A rms	0.26 A rms	0.55 A rms
Maximum Long-Term Continuous Current	8.4 A rms	4.2 A rms	9.7 A rms
Burst Current	18 A rms	9 A rms	21 A rms
Ultimate Short-Term Peak Current	40 A peak	22 A peak	46 A peak
Inrush Current	10 A peak	13 A peak	10 A peak

The minimum electrical service amperage required by a 500-HP subwoofer system is the sum of the Maximum Long-Term Continuous Current for each loudspeaker. An additional 30 percent above the minimum amperage is recommended to prevent peak voltage drops at the service entry.

NOTE: For best performance, the AC cable voltage drop should not exceed 10 V, or 10 percent at 115 V and 5 percent at 230 V. Make sure that even with AC voltage drops that the AC voltage always remains within the operating windows.

ELECTRICAL SAFETY ISSUES

Pay close attention to these important electrical and safety issues.

- The 500-HP requires a grounded outlet. Always use a grounded outlet and plug.

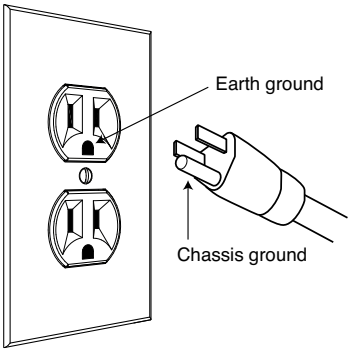

- Do not use a ground-lifting adapter or cut the AC cable ground pin.

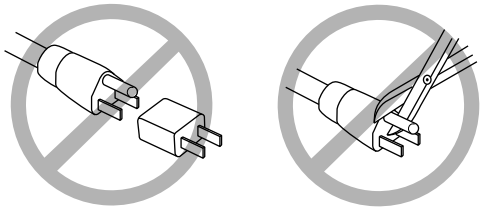

- Do not exceed the current capability of the 20-amp AC Input connector for the loudspeaker. When looping loudspeakers, consider the total current draw for all loudspeakers on the circuit, including the first loudspeaker.
- Make sure the AC power cable for the loudspeaker has the appropriate power plug (on the other end) for the area in which you will operate the loudspeaker. In addition, the AC power cable must be rated for the total current draw of all loudspeakers looped from the power source.
- Do not operate the unit if the power cable is frayed or broken.
- Use the cable ring on the rear of the 500-HP subwoofer to reduce strain on the connected AC power and audio cables. Do not use the cable ring for any other purpose.

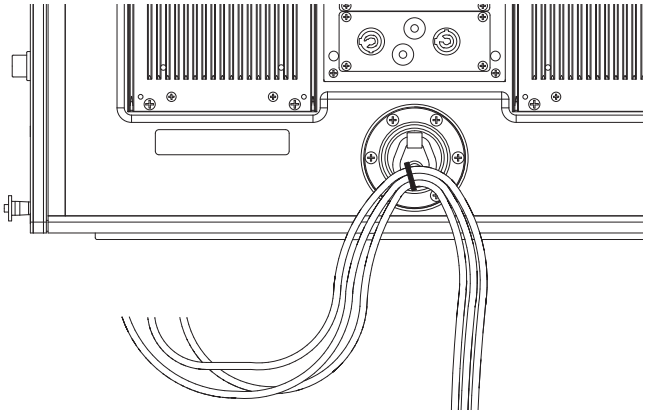

- Keep all liquids away from the 500-HP to avoid hazards from electrical shock.

CHAPTER 3: AMPLIFICATION AND AUDIO

The low-frequency drivers in the 500-HP are powered by a two-channel proprietary Meyer Sound amplifier with MOSFET output stages. The audio signal is processed with an electronic crossover, correction filters for phase and frequency response, and driver protection circuitry. Each channel has peak and rms limiters that prevent driver over-excursion and regulate the temperature of the voice coil.

The user panel on the back of the 500-HP has two slots for modules. The top slot contains an audio input module (described in this chapter). The bottom slot is reserved for the optional RMS module, used for connecting to the RMS remote monitoring system (see Chapter 6, "The RMS Remote Monitoring System").

AUDIO CONNECTIONS WITH VEAM CABLING

The 500-HP can be ordered from the factory with a VEAM all-in-one connector. VEAM connectors consolidate AC power, audio, and RMS into a single cable, facilitating easy connections and quick setups. For more information, see Appendix A, "Optional VEAM Multipin Connector."

AUDIO INPUT MODULES

The 500-HP can be equipped with one of the following audio input modules:

Module	Included Features
Looping Audio Input	Input and looping connectors, LEDs for limiting and temperature
Looping, Polarity, and Attenuating Audio Input	Input and looping connectors, LEDs for limiting and temperature, polarity switch, attenuating knob (–18 dB)
Summing Audio Input	Summed input connectors (2), LEDs for limiting and temperature, polarity switch, attenuating knob (–18 dB)

These audio input modules are documented in greater detail in the following sections.

The Looping Audio Input Module

The Looping Audio Input module includes the following connectors and LEDs.



Looping Audio Input Module

Input Connector

The female XLR Input connector accepts a balanced audio signal with an input impedance of 10 kOhm. The connector uses the following wiring:

- **Pin 1** — 220 kOhm to chassis and earth ground (ESD clamped)
- **Pin 2** — Signal (+)
- **Pin 3** — Signal (–)
- **Case** — Earth (AC) ground and chassis

Pins 2 and 3 carry the input as a differential signal. Pin 1 is connected to earth through a 220 kOhm, 1000 pF, 15 V clamped network. This circuitry provides virtual ground lift for audio frequencies while allowing unwanted signals to bleed to ground. Make sure to use standard, balanced XLR audio cables with all three pins connected on both ends. Telescopic grounding is not recommended, and shorting an input connector pin to the case may cause a ground loop, resulting in hum.

TIP: If unwanted noise or hiss is produced by the loudspeaker, disconnect its input cable. If the noise stops, there is most likely nothing wrong with the loudspeaker. To locate the source of the noise, check the audio cable, source audio, and AC power.

Loop Output Connector

The male XLR Loop connector allows multiple 500-HP subwoofers to be looped from a single audio source. Connect the Loop output of the first 500-HP to the Input of the second 500-HP, and so forth. The Loop connector is wired in parallel to the Input connector and transmits the unbuffered source signal even when the 500-HP is powered off.

To avoid distortion when looping multiple 500-HPs, make sure the source device can drive the total load impedance of the looped subwoofers. In addition, the source device must be capable of delivering a minimum of 20 dBV (10 V rms into 600 ohms) to yield the maximum peak SPL over the operating bandwidth of the subwoofers.

To calculate the load impedance for the looped subwoofers, divide 10 kOhms (the input impedance for a single 500-HP) by the number of looped subwoofers. For example, the load impedance for 10 500-HP subwoofers is 1000 ohms (10 kOhms / 10). To drive this number of looped subwoofers, the source device should have an output impedance of 100 ohms or less. This same rule applies when looping 500-HP subwoofers with other self-powered Meyer Sound loudspeakers and subwoofers.

NOTE: Most source devices are capable of driving loads no smaller than 10 times their output impedance.

NOTE: Make sure that all cabling for looped loudspeakers is wired correctly (Pin 1 to Pin 1, Pin 2 to Pin 2, and so forth) to prevent the polarity from being reversed. If one or more loudspeakers in a system have reversed polarity, frequency response and coverage can be significantly degraded.

Limit LED

The two low-frequency drivers for the 500-HP are powered by separate amplifier channels that are each routed to a single limiter. When a safe power level is exceeded in either channel, limiting is engaged and the subwoofer's bottom yellow Limit LED lights (the top Limit LED is disabled for the 500-HP). When engaged, the limiter not only protects the drivers, but also prevents signal peaks from causing excessive distortion in the amplifier's channels, thereby preserving headroom and maintaining smooth frequency responses at high levels. When levels returns to normal, below the limiter's threshold, limiting ceases.

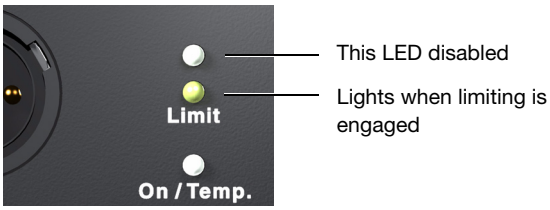

Limit LEDs

The 500-HP performs within its acoustical specifications at normal temperatures when the Limit LED is unlit, or if the LED is lit for two seconds or less and then turns off for at least one second. If the LED remains lit for longer than three seconds, the subwoofer enters hard limiting where:

- Increases to the input level have no effect.
- Distortion increases due to clipping and nonlinear driver operation.
- The drivers are subjected to excessive heat and excursion, which will compromise their life span and may eventually lead to damage over time.

CAUTION: The Limit LEDs indicate when a safe, optimum level is exceeded. If a 500-HP subwoofer begins to limit before reaching the required SPL, consider adding more loudspeakers to the system.

NOTE: The 500-HP subwoofer uses optical limiters that add no noise and have no effect on the signal when the limiters are not engaged and the Limit LED is not lit.

On/Temp LED

When the 500-HP is powered on, its On/Temp LED turns green. If the temperature of the heatsink reaches 85° C (185° F), the On/Temp LED changes from green to red and the limiter threshold is lowered to a safe level to prevent the system from overheating. Under high temperature conditions the output level is reduced by approximately 6 dB.

When the heatsink temperature decreases to 80° C (176° F), the On/Temp LED changes from red back to green and the limiter threshold returns to normal.

NOTE: When the On/Temp LED is red, this is an indication that the unit is reaching its maximum heat dissipation and a reduction in SPL is recommended.

TIP: When the 500-HP is connected to an RMS network, the RMS software provides additional feedback on the loudspeaker's operating temperature. For more information, see Chapter 6, "The RMS Remote Monitoring System."

The Looping, Polarity, and Attenuating Audio Input Module (Optional)

The Looping, Polarity, and Attenuating Audio Input module has the same input and output connectors and LEDs found on the Looping Audio Input module (see "The Looping Audio Input Module" on page 15). In addition, it also has a Polarity switch and Attenuator knob.

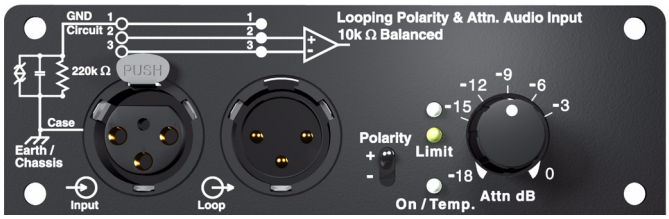

Looping, Polarity, and Attenuating Audio Input Module

Polarity Switch

The Polarity switch lets you change the polarity of the source signal. When the switch is in the up (+) position, pin 2 is hot relative to pin 3, resulting in a positive pressure wave when a positive signal is applied to pin 2. When the switch is in the down (–) position, pin 3 is hot relative to pin 2, resulting in a positive pressure wave when a positive signal is applied to pin 3.

NOTE: The Polarity switch does not affect the signal coming from the Loop connector. The Loop connector is wired in parallel to the Input connector and transmits the unbuffered source signal (even when the loudspeaker is powered off).

Attenuator Knob

The Attenuator knob reduces the source signal level connected to the Input connector. The knob offers an attenuation range of 0 dB (no attenuation), when turned all the way to the right, to –18 db, when turned all the way to the left.

NOTE: The Attenuator knob does not affect the signal coming from the Loop connector. The Loop connector is wired in parallel to the Input connector and transmits the unbuffered source signal (even when the loudspeaker is powered off).

The Summing Audio Input Module (Optional)

The Summing Audio Input module is similar to the Looping, Polarity, and Attenuating Audio Input module but has two balanced female XLR Input connectors (instead of one Input and one Looping connector). When a single Input connector is used, it functions normally (see "Input Connector" on page 15); when both Input connectors are used, the signals are summed into a single mono signal with both inputs attenuated by 6 dB. This is useful when distributing left and right channels from a stereo signal to a single 500-HP without requiring external level control.



Summing Audio Input Module

AMPLIFIER COOLING SYSTEM

The amplifier for the 500-HP uses natural convection for cooling at low to moderate audio levels; for high audio levels, it uses Meyer Sound's proprietary QuietCool™ fan technology to prevent overheating. The QuietCool fan only engages at high audio levels, making it virtually inaudible.

⚠ **CAUTION:** The heatsink for the 500-HP can reach temperatures of up to 85° C (185° F) during extreme operation. Use extreme caution when approaching the rear of the loudspeaker.

⚠ **CAUTION:** To keep the 500-HP from getting too hot, allow for proper ventilation around the subwoofer, especially when it is operated in tightly packed conditions.

⚠ **CAUTION:** In the unlikely event that the heatsink temperature for the 500-HP reaches 95° C (203° F), the subwoofer will automatically shut down until AC power is removed to allow the heatsink to cool. If after cooling and reapplying AC power the subwoofer shuts down again, contact Meyer Sound for repair information.

CHAPTER 4: INTEGRATING 500-HP SUBWOOFERS

INTEGRATING 500-HP SUBWOOFERS WITH MEYER SOUND LOUDSPEAKER SYSTEMS

It is often necessary to augment mid-high and full-range loudspeaker systems with subwoofers when higher SPL is needed, or when the program content requires additional low-frequency energy (for example, for sound reinforcement for popular music). The 500-HP subwoofer can achieve frequencies down to 35 Hz, extending the system response appreciably and increasing the acoustic power of the system in the lowest frequencies. Common applications for the 500-HP subwoofer include using it with M'elodie curvilinear array loudspeakers, since its rigging is directly compatible, as well as using it with UltraSeries loudspeakers.

Full-range signals can be connected directly to Meyer Sound self-powered loudspeakers and subwoofers because they have built-in active crossovers. 500-HP subwoofers can be added to a loudspeaker system by simply daisy-chaining them to the loudspeakers. In more complex systems, subwoofers can be added by using line drivers or digital signal processor to send multiple outputs to each subsystem. In addition, you can use low-cut filters to flatten the overall frequency response of the system while increasing the headroom in the lower frequencies.

Integrating 500-HPs with M'elodie Curvilinear Array Loudspeakers

When fitted with MRF-500 rigging hardware, 500-HP subwoofers can be flown at the top of M'elodie arrays, or placed at the bottom of groundstacked arrays, to boost the system's low-frequency output and headroom. For flown arrays, the 500-HP attaches to the MG-M'elodie rigging grid; the M'elodies attach to the bottom of the 500-HP via the GuideALinks, which support both uptilt and downtilt for the flown loudspeakers. The 500-HP extends the low-frequency response of the system by approximately one octave, as well as provides additional headroom in the lowest octave of the M'elodie's range.

Integrating 500-HPs with UltraSeries Loudspeakers

The 500-HP subwoofer can be used with the UltraSeries UPA-1P/2P, UPJ-1P, UPJunior, and UPQ-1P/2P loudspeakers to the boost the low-frequency output and headroom for these systems. The UltraSeries loudspeakers can be easily integrated with the 500-HP using the subwoofer's integral 1/2-inch pole-mount receptacle.

Optimum Loudspeaker to Subwoofer Ratio

The ideal ratio of loudspeakers to 500-HP subwoofers depends on the following variables:

- Loudspeaker model
- System configuration
- Frequency content of source material
- Headroom required for low frequencies

For most applications, the ratios in Table 2 should yield good results.

Table 2: Recommended 500-HP Subwoofer Ratios

Loudspeaker	Recommended Ratio (Number of Loudspeakers per 500-HP)
M'elodie	2 x 1
UPA-1P/UPA-2P	1 x 1 for bass-heavy applications; 2 x 1 for flat frequency response
UPJ-1P	2 x 1 for bass-heavy applications; 3 x 1 for flat frequency response
UPJunior	3 x 1 for bass-heavy applications; 4 x 1 for flat frequency response
UPQ-1P/UPQ-2P	1 x 1 for flat frequency response; 1 x 2 for bass-heavy applications.

NOTE: If the 500-HP's Limit LED begins to light before reaching the required SPL, consider adding more 500-HP to meet the SPL requirements without exposing the drivers to excessive heat and excursion.

TIP: MAPP Online Pro™ can be used to accurately predict the appropriate loudspeaker deployment and subwoofer integration for loudspeaker systems, complete with coverage data, system delay and equalization settings, rigging information, and detailed design illustrations. For more information, see "MAPP Online Pro" on page 37.

Placement for 500-HP Subwoofers

An important factor governing subwoofer response is their placement relative to adjacent surfaces. Subwoofers gain significant power by coupling (or loading) with nearby floors and walls. A subwoofer placed on the floor benefits from half-space loading and generates approximately 6 dB of additional SPL on-axis into the room compared to the same subwoofer in free space (suspended).

Flying 500-HP Subwoofers

It is beneficial in some cases to fly subwoofers, even though they will not benefit from half-space loading. For example, placing subwoofers in a flown array of mid-high loudspeakers can create a smoother full-range frequency image because the subwoofers are not separated by distance from the flown array to the floor. When flying subwoofers, consider adding more subwoofers to satisfy the SPL and headroom requirements of the system.

DAISY-CHAINING 500-HP SUBWOOFERS WITH LOUDSPEAKERS

When loudspeakers and 500-HP subwoofers are daisy-chained using the Loop connector, the result is a fairly flat frequency response. However, the response will show an increase in the 60 Hz – 200 Hz range where the loudspeaker and subwoofer response overlaps at certain ratios (see Table 2).

To daisy-chain 500-HP subwoofers with loudspeakers:

1. Daisy-chain the suggested number of loudspeakers for your system (see Table 2). Connect the source signal to the Input of the first loudspeaker, then connect the Loop output of the first loudspeaker to the Input of the second loudspeaker (and so forth).
2. Connect the Loop output of the last loudspeaker in the chain to the 500-HP Input.
3. Configure the polarities for the loudspeakers and subwoofers:

- If the loudspeakers and subwoofers are coplanar, or they are very close together (four feet or less), set their polarities to the same value. If any of the loudspeakers have a Polarity switch, set each switch to the up (+) position.
- If the loudspeakers and subwoofers are more than four feet apart, or if a delay is required between them, use a measurement system like Meyer Sound's SIM 3 to determine appropriate delay and polarity settings.

⚠ **CAUTION:** Make sure the source signal is sufficient to drive the total load impedance of the daisy-chained loudspeakers (see "Loop Output Connector" on page 16).

DRIVING 500-HP SUBWOOFERS AND LOUDSPEAKERS WITH LINE DRIVERS

Using a line driver with dedicated low and mid-hi outputs (like Meyer Sound's LD-1A and LD-2) to drive a loudspeaker system with 500-HP subwoofers allows adjustments to the gain and polarity of each sub-system. This lets you effectively compensate for the ratio of loudspeakers to subwoofers, as well as any acoustical conditions. You can also engage a low-cut filter on the signal routed to the loudspeakers to flatten the overall frequency response, minimizing the gain in the frequency range where the loudspeakers and subwoofers overlap while increasing the headroom in the lower frequencies.

NOTE: When using a line driver, if the gains for the loudspeakers and 500-HP subwoofer are set to the same level, the combined response is identical to a daisy-chained configuration, resulting in a gain in the overlapping frequency range.

To drive 500-HP subwoofers and loudspeakers with a line driver:

1. Daisy-chain the suggested number of loudspeakers for your system (see Table 2). Connect the output of the line driver to the Input of the first loudspeaker, then connect the Loop output of the first loudspeaker to the Input of the second loudspeaker (and so forth).
2. Connect the low or subwoofer output of the line driver to the 500-HP Input.
3. To minimize the gain in the frequency range where the loudspeakers and 500-HP overlap, engage a low-cut filter for the signal routed to the loudspeakers.
4. Configure the polarities for the loudspeakers and subwoofers:

- If a low-cut filter is engaged for the loudspeakers, and the loudspeakers and subwoofers are coplanar or very close together (four feet or less), a reverse in the polarity for the subwoofer may be required.
- If the low-cut filter is engaged for the loudspeakers, and the loudspeakers and subwoofers are more than four feet apart, the polarities may need to be reversed again to compensate for delay propagation. In these cases, a

measurement system like Meyer Sound's SIM 3 is recommended to determine appropriate delay and polarity settings.

DIGITAL SIGNAL PROCESSORS AND 500-HP SUBWOOFERS

Full-range signals can be connected directly to Meyer Sound self-powered loudspeakers and subwoofers because they have built-in active crossovers. External crossovers and digital signal processors are optional and should be used with caution as they can introduce phase shifts that cause destructive cancellations.

If a digital signal processor is used, both loudspeakers and subwoofers should be driven from the same processor to keep their delay times the same. Otherwise a phase shift between the loudspeakers and subwoofer may be encountered. In addition, you should verify the delay time between channels: some digital signal processors may incur channel-to-channel delays when the processor is near maximum throughput, which becomes more likely as the number of filters in use by the processor is increased.

In no case should a filter higher than the 2nd order be used on source signals. The additional phase shift introduced by these filters deteriorates the impulse response, and the higher roll-off does not improve crossover interaction.

In addition, when using third-party digital signal processors to filter source signals, it is highly recommended that the filter be configured to emulate the low-cut filter used by Meyer Sound's LD-1A and LD-2.

LD-1A and LD-2 Low-Cut Filter Parameters

Type	Order	Pole Frequency	Q/BW
High Pass	2nd (–12 dB/oct)	162 Hz	0.82/1.67*

**If the digital signal processor does not have variable Q for high-pass filters, the filter should be set to "Butterworth" (Q ≅ .7).*

If loudspeakers will be driven directly from a digital signal processor, make sure the signal is sufficient to drive the total load impedance of the connected loudspeakers (see "Loop Output Connector" on page 16).

TIP: To address the collective concerns of system design verification, subwoofer integration, digital signal processors, delay systems, and acoustical conditions, a measurement system like Meyer Sound's SIM 3 is strongly recommended.

THE GALILEO LOUDSPEAKER MANAGEMENT SYSTEM

Meyer Sound's Galileo® loudspeaker management system is a comprehensive solution for driving and aligning loudspeaker systems, especially those comprised of Meyer Sound self-powered loudspeakers and subwoofers. The Galileo 616 is a two-space rack unit with six inputs and 16 low-latency outputs. Processing for the outputs includes gain, polarity, delay, high- and low-pass filters, equalization (parametric and TruShaping), and atmospheric correction.

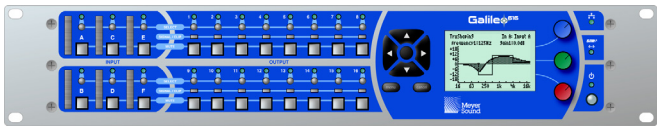

Galileo 616

The Galileo 616 can be controlled from its intuitive front panel or from the extensive Compass™ software running on a Windows or Mac® computer. The Galileo system also interfaces seamlessly with Meyer Sound's SIM 3 audio analyzer.

CHAPTER 5: QUICKFLY RIGGING

500-HP subwoofers equipped with the optional MRF-500 rigging frame can be linked directly to the MG-M'elodie multipurpose grid, M'elodie loudspeakers, as well as additional 500-HPs to form flown and groundstacked arrays. In addition, all 500-HPs have a 1.5-inch pole-mount receptacle for mounting UltraSeries loudspeakers that include support for pole-mount adapters.

When using subwoofers to enhance low-frequency headroom in full-range and mid-high sound systems, their effectiveness is determined by how the subwoofers are grouped, how they are placed in relation to the other loudspeakers in the system, and how they are oriented to nearby walls and floors.

Important Safety Considerations!

When installing Meyer Sound loudspeakers and subwoofers, the following precautions should always be observed:

- All Meyer Sound products must be used in accordance with local, state, federal, and industry regulations. It is the owner's and user's responsibility to evaluate the reliability of any rigging method for their application. Rigging should only be carried out by experienced professionals.
- Use mounting and rigging hardware that has been rated to meet or exceed the weight being hung.
- Make sure to attach mounting hardware to the building's structural components (studs or joists), and not just to the wall surface. Verify that the building's structure and the anchors used for the installation will safely support the total weight of the mounted loudspeakers.
- Use mounting hardware appropriate for the surface where the loudspeaker will be installed.
- Make sure bolts and eyebolts are tightened securely. Meyer Sound recommends using Loctite® on eyebolt threads and safety cables.
- Inspect mounting and rigging hardware regularly. Immediately replace any worn or damaged components.

THE MRF-500 RIGGING FRAME WITH GUIDEALINKS

500-HPs equipped with the MRF-500 rigging frame include three GuideALinks on each side of the subwoofer. The GuideALinks, located at the bottom of the frame in the front, middle, and rear, attach to GuideALink slots in loudspeakers (500-HPs or M'elodies) flown below the unit.

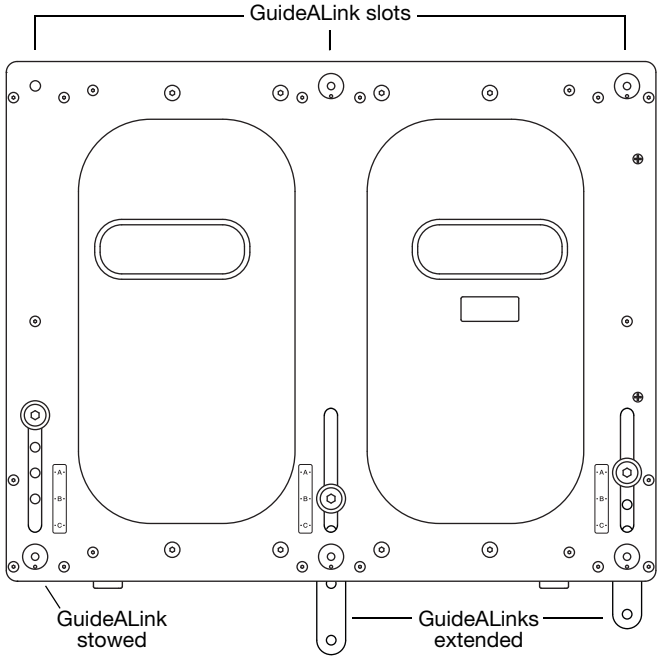

500-HP with MRF-500 Rigging Frame

The rigging frame also includes three GuideALink slots at the top of the frame (in the front, middle, and rear) for attaching to GuideALinks — from the MG-M'elodie multipurpose grid or from another 500-HP — when the subwoofer is flown. The slots are also used when attaching to the GuideALinks of 500-HPs and M'elodies groundstacked above the unit.

GuideALinks are easily set to one of three positions (A, B, or C) with accessible knobs. GuideALink labels indicate the position of the links. A wide range of splay angles and configurations, including cardioid arrays, are possible with the different combinations of positions for the front, middle, and rear GuideALinks.

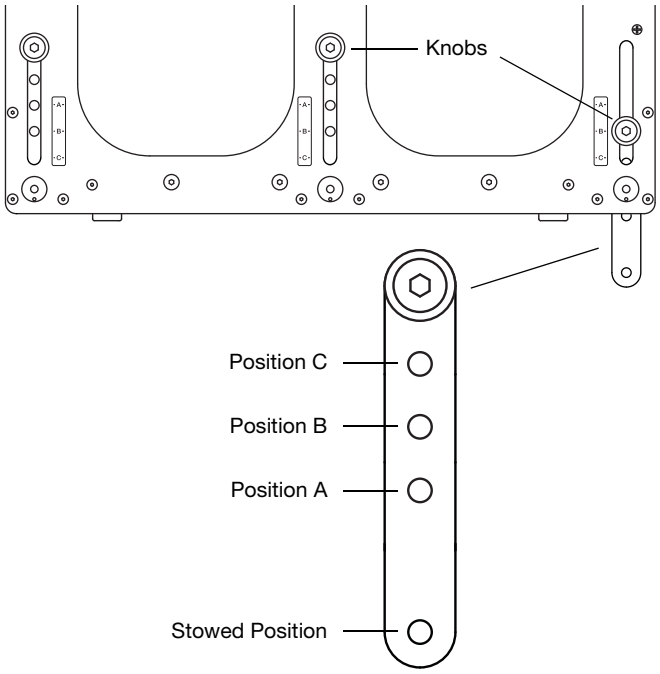

500-HP GuideALink Positions

500-HP GuideALinks are secured at the top and bottom of the rigging frames with the 10 included quick-release pins.

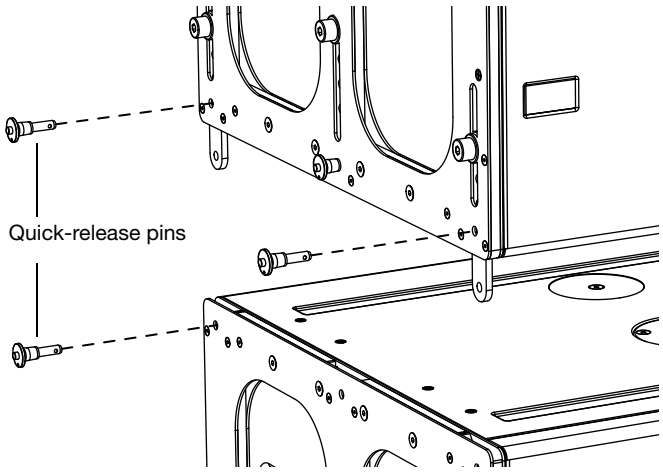

500-HP Quick-Release Pins

CAUTION: Routine maintenance inspections of the 500-HP subwoofer should include a check of all GuideALink knobs. Rotate each knob counterclockwise to make sure they are tight. If a knob turns, reset it in the link with Loctite 290 and let it cure for 48 hours. Retest the link before the unit is flown.

GROUNDSTACKING 500-HPS

500-HPs equipped with MRF-500 rigging frames can be groundstacked with additional 500-HPs and M'elodies. Groundstacked units should be securely attached with the GuideALinks.

Groundstacking 500-HPs with 500-HPs

500-HPs can be groundstacked up to three units high. When groundstacking 500-HPs, each 500-HP should be attached to the unit below it with the front and rear GuideALinks; the middle GuideALinks are not used. 500-HPs should be groundstacked at 0-degree angles to avoid tipping.

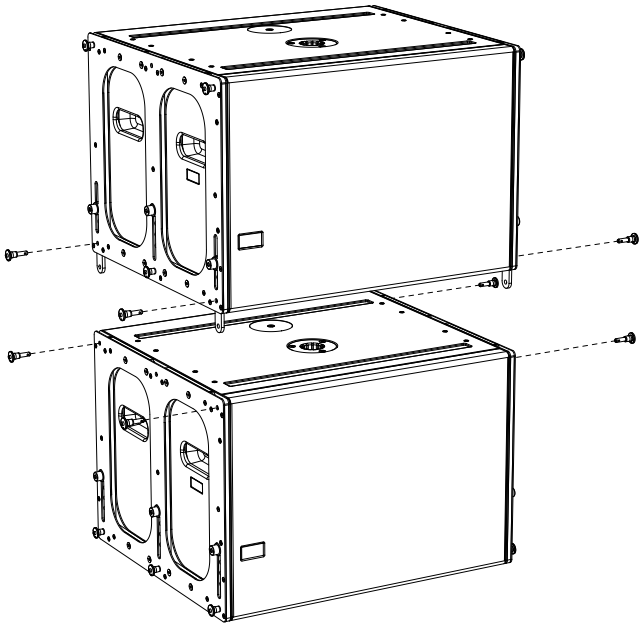

Groundstacked 500-HPs

Table 3: GuideALink Positions for Groundstacked 500-HPs

500-HP GuideALink Positions			Angle for Stacked 500-HP
Rear (Attached to Rear Slot)	Middle	Front (Attached to Front Slot)	
A	Stowed	A	0°

CAUTION: For safety reasons, to avoid tipping, a maximum of three units is supported for groundstacked 500-HPs.

Groundstacking 500-HPs with M'elodies

A maximum of five M'elodies can be groundstacked above a single 500-HP. When groundstacking a M'elodie above a 500-HP, the M'elodie's GuideALinks should be attached to the front and middle slots of the 500-HP. The M'elodies can be groundstacked at angles from +5 degrees (downtilt) to –5 degrees (uptilt) in 1-degree increments.

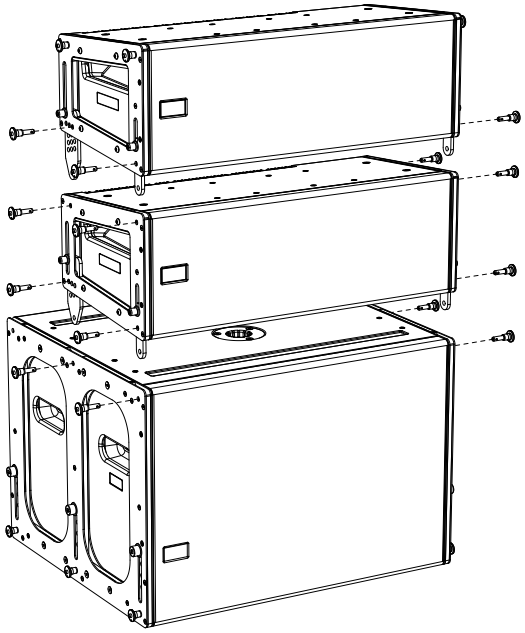

Groundstacked 500-HP with M'elodies

Table 4: GuideALink Positions for Groundstacked M'elodies

M'elodie GuideALink Positions		Angle for Stacked M'elodie
Rear (Attached to 500-HP Middle Slot)	Front (Attached to 500-HP Front Slot)	
10	Bottom	+5° (uptilt)
9	Bottom	+4° (uptilt)
8	Bottom	+3° (uptilt)
7	Bottom	+2° (uptilt)
6	Bottom	+1° (uptilt)
5	Bottom	0°
4	Bottom	–1° (downtilt)
3	Bottom	–2° (downtilt)
2	Bottom	–3° (downtilt)
1	Bottom	–4° (downtilt)
0	Bottom	–5° (downtilt)

CAUTION: For safety reasons, to avoid tipping, a maximum of five M'elodies can be stacked atop one 500-HP, or four M'elodies atop two 500-HPs.

THE MG-M'ELODIE GRID

The MG-M'elodie multipurpose grid allows multiple 500-HP subwoofers, equipped with MRF-500 rigging frames, and M'elodie loudspeakers to be flown in a wide range of configurations.

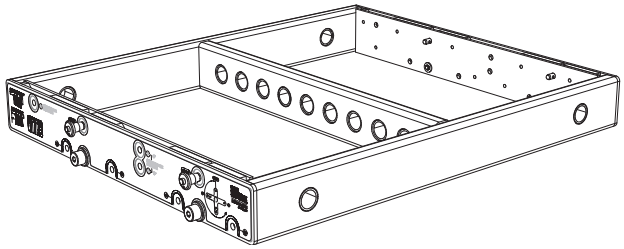

MG-M'elodie Multipurpose

The MG-M'elodie attaches to flown loudspeakers with its four GuideALinks (two per side); the GuideALinks can be set to two positions (A or B), which determine the angle for the flown loudspeakers. The 500-HP can be flown at angles of 0, –5, and +5 degrees. The MG-M'elodie GuideALinks are secured to the flown 500-HP with the quick-release pins included with the 500-HP.

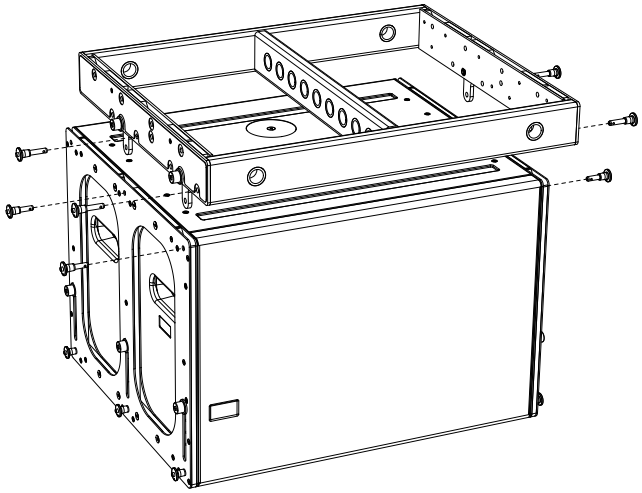

MG-M'elodie Multipurpose Grid with 500-HP

NOTE: For configuration information, load ratings, and pickup points for the MG-M'elodie, refer to the MG-M'elodie Assembly Guide (PN 05.152.019.01) available from the Meyer Sound website (www.meyersound.com).

CAUTION: When securing GuideALinks to the MG-M'elodie grid, make sure to use the quick-release pins with the red or blue buttons. Do not use the quick-release pins with the black buttons, included with 500-HPs and M'elodies, as they are shorter and will not lock properly in place.

NOTE: The MG-M'elodie GuideALinks and quick-release pins should remain with the grid when it is uninstalled for transport. When preparing the MG-M'elodie for transport, remove the quick-release pins, set the GuideALinks to the stowed position, and reinsert the quick-release pins. The grid can also remain attached to the top of a 500-HP stack and transported with the MCF-500 caster frame (see "The MCF-500 Caster Frame" on page 30).

MG-M'elodie Grid Load Ratings

Table 5: MG-M'elodie Load Ratings for 500-HP Arrays

Safety Factor	Weight	500-HPs
5:1	1550 lbs (702 kg)	9
7:1	1116 lbs (506 kg)	6

CAUTION: When using 500-HP and M'elodie arrays with the MG-M'elodie grid, never exceed the load rating for the grid.

MG-M'elodie Grid and 500-HP Configurations

The most basic configuration for the MG-M'elodie and 500-HP is with the grid's GuideALinks attached to the front and middle slots of the 500-HP. This configuration is suitable for non-curved arrays.

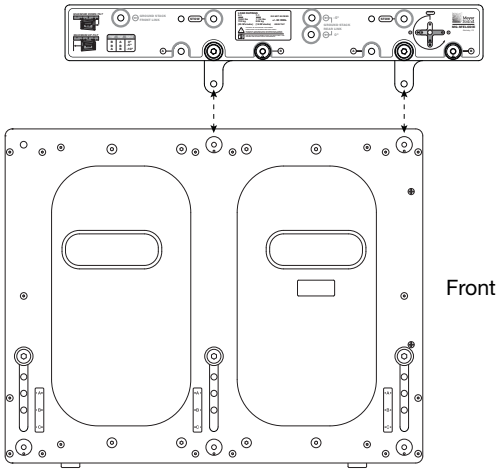

MG-M'elodie Attached to 500-HP Front and Middle Slots

The MG-M'elodie GuideALinks can also be attached to the rear and middle slots of the 500-HP. This configuration can be used with curved arrays so the array's center of gravity is closer to the middle of the grid.

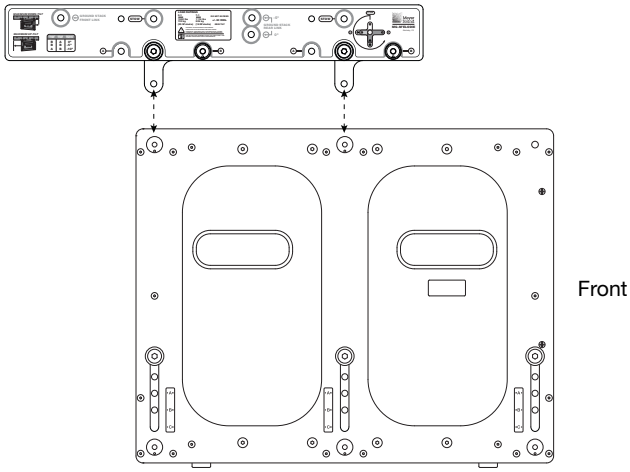

MG-M'elodie Attached to 500-HP Middle and Rear Slots

Additional flexibility is possible when the MG-M'elodie is rotated. When rotated, the grid's GuideALinks can also be attached to the 500-HP's front/middle slots, or middle/rear slots. Figure 2 shows the four possible configurations for the MG-M'elodie and 500-HP.

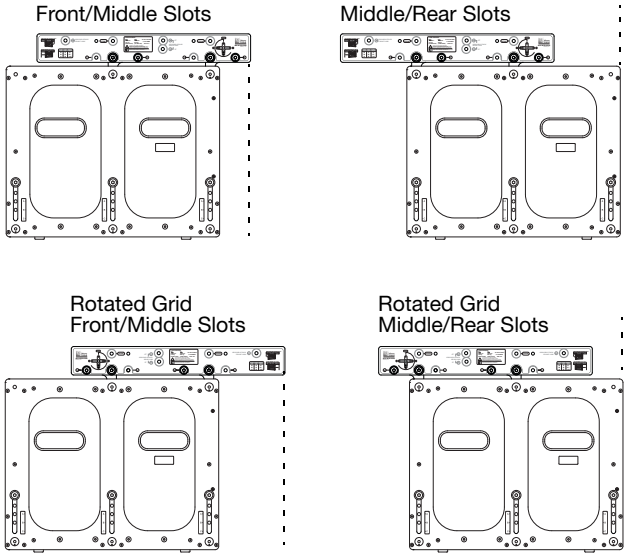

Figure 2: MG-M'elodie and 500-HP Configurations

CAUTION: When working with curved arrays, it is strongly recommended that the array's center of gravity be as close as possible to the grid's center.

Adjusting the Angle for MG-M'elodie Grid and 500-HP Configurations

When the MG-M'elodie's front and rear GuideALinks are set to position A, the attached 500-HP is flown at 0 degrees. Angles of +5 and –5 degrees are also possible by adjusting the grid's GuideALinks positions. For example, Figure 3 shows the MG-M'elodie's front GuideALinks set to position A and the rear GuideALinks set to position B, and attached to the 500-HP front and middle slots respectively. The resulting angle is a +5-degree uptilt.

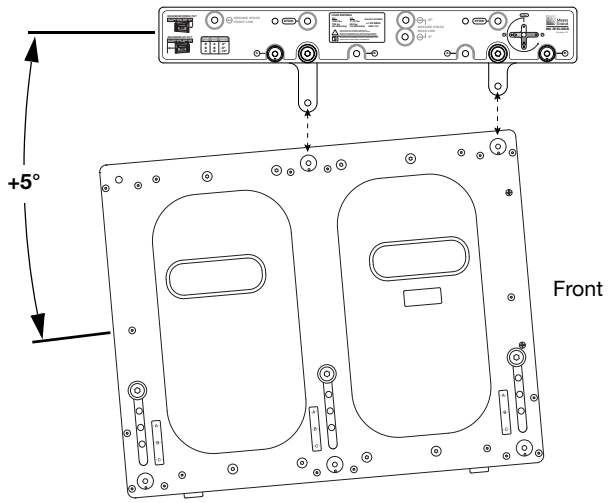

Figure 3: 500-HP Flown at +5 Degrees

Figure 4 shows the angled configurations possible with the MG-M'elodie and 500-HP.

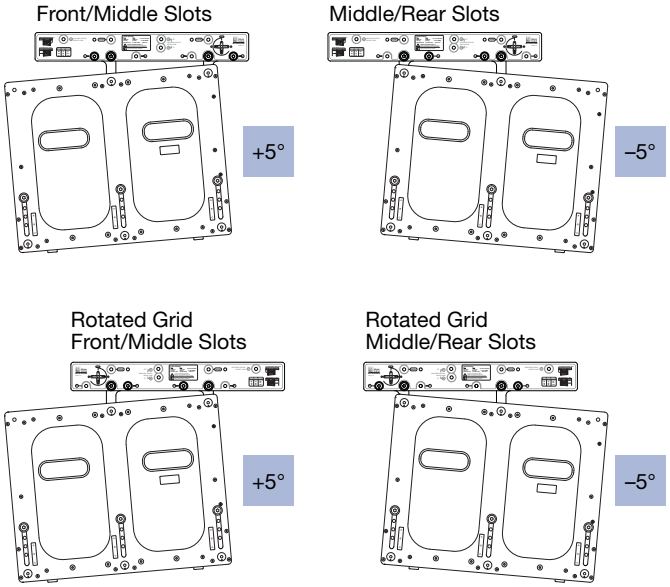

Figure 4: MG-M'elodie and 500-HP Angled Configurations

Table 6 lists all possible configurations for the MG-M'elodie and 500-HP, including the GuideALink positions and attachment points.

Table 6: MG-M'elodie and 500-HP Configurations

MG-M'elodie Orientation	MG-M'elodie GuideALink Positions		Angle for Flown 500-HP
	Front (Attached to)	Rear (Attached to)	
Normal	A (500-HP middle slot)	A (500-HP front slot)	0°
	B (500-HP middle slot)	A (500-HP front slot)	+5° (uptilt)
	A (500-HP rear slot)	A (500-HP middle slot)	0°
	A (500-HP rear slot)	B (500-HP middle slot)	–5° (downtilt)
Rotated	A (500-HP rear slot)	A (500-HP m middle slot)	0°
	A (500-HP rear slot)	B (500-HP middle slot)	–5° (downtilt)
	A (500-HP middle slot)	A (500-HP front slot)	0°
	B (500-HP middle slot)	A (500-HP front slot)	+5° (uptilt)

NOTE: 0-degree configurations with the MG-M'elodie and 500-HP can also be achieved by setting both of the grid's GuideALinks to the B positions (as opposed to the A positions). This configuration is useful when more space is required between the grid and the first 500-HP in the array.

500-HP WITH FLOWN LOUDSPEAKERS

The 500-HP GuideALinks can be used to suspend additional 500-HPs or M'elodie loudspeakers. The positions for the 500-HP GuideALinks (A, B, or C), which are inserted into the slots of the flown loudspeaker, determine the angle for the flown loudspeaker.

CAUTION: When using 500-HP and M'elodie arrays with the MG-M'elodie grid, never exceed the load rating for the grid or the 500-HP. For

more information, see “MG-M’elodie Grid Load Ratings” on page 26 and “500-HP Load Ratings” on page 30.

500-HP with Flown 500-HPs

When flying 500-HPs, the front and rear GuideALinks are attached to the front and rear slots of the flown 500-HP (the middle GuideALinks are not used). The most common angle for flown 500-HPs is 0 degrees. In addition, downtilts of –3 and –5 degrees can be used to curve 500-HP arrays flown near M’elodie arrays, for both aesthetic reasons and so the subwoofers do not interfere with the high-frequency coverage of the nearby M’elodies.

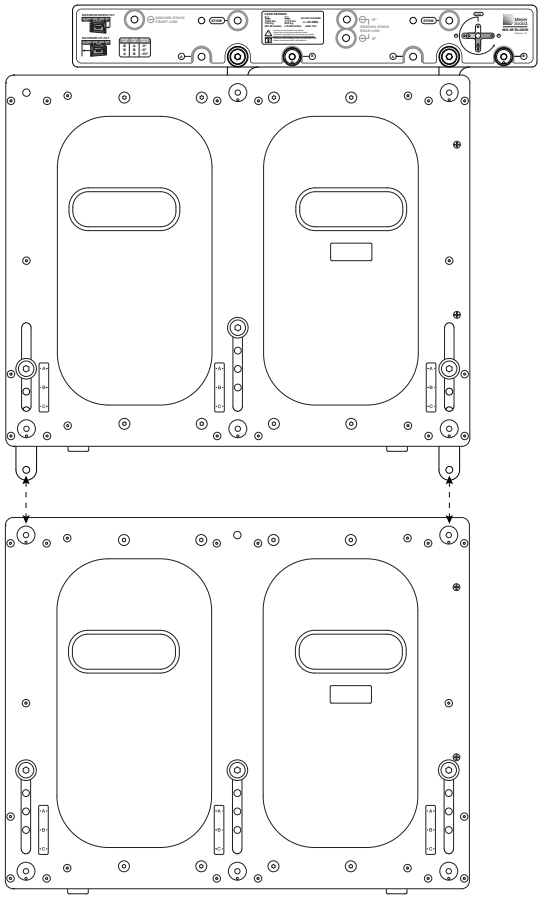

500-HP with Flown 500-HP

CAUTION: When flying 500-HPs below a 500-HP, make sure to use both the front and rear GuideALinks (not the middle ones). The middle GuideALinks are only used for flying M’elodies.

Table 7 lists the GuideALink configurations, and resulting angles, for flown 500-HPs (also shown in Figure 5). Uptilt angles are also possible but not as useful since they result in concave angles between the subwoofers.

Table 7: 500-HP GuideALink Positions for Flown 500-HPs

GuideALink Positions			Angle for Flown 500-HP
Rear (Attached to Rear Slot)	Middle	Front (Attached to Front Slot)	
A	Stowed	A	0°
A	Stowed	B	–3° (downtilt)
A	Stowed	C	–5° (downtilt)

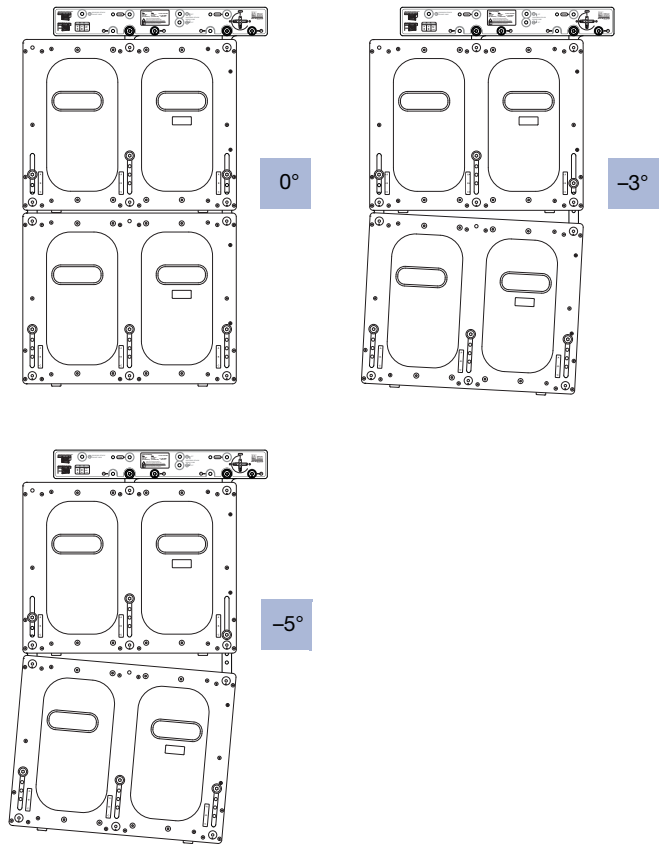

Figure 5: Angles for Flown 500-HPs

NOTE: Not all mechanically possible configurations for flown 500-HPs are useful (for example, concave angles of +3 and +5 degrees). These configurations are possible because the GuideALinks were designed to allow a wide range of flown and groundstacked configurations for 500-HPs and M’elodies.

500-HPs with Flown M'elodies

500-HPs can be flown within M'elodie arrays to supplement and extend low-frequency headroom. In these mixed arrays, the 500-HPs are typically positioned at the top of the array (at a 0-degree relation to each other) with the M'elodies flown below the 500-HPs, with an uptilt or downtilt, as dictated by the needs of the system.

When flying M'elodies, the 500-HP front and middle GuideALinks are attached to the slots of the flown M'elodie (the rear GuideALinks are not used). M'elodies can be flown at angles from +5 degrees (uptilt) to –15 degrees (downtilt) in 5-degree increments.

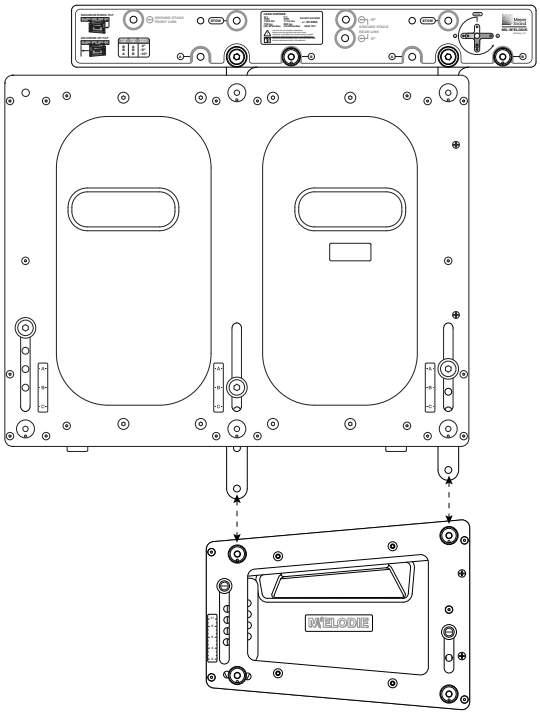

500-HP with Flown M'elodie

NOTE: When suspending M'elodies from 500-HPs, do not use the middle and rear GuideALinks. For acoustical reasons, M'elodies should always be coplanar with 500-HPs in arrays.

TIP: When loudspeakers and subwoofers are placed more than 4 feet apart, or if a delay is required between them, use a measurement system like Meyer Sound's SIM 3 to determine appropriate delay and polarity settings. For more information, see "The SIM 3 Measurement System" on page 38.

Table 8 lists the 500-HP GuideALink configurations, and resulting angles, for flown M'elodie (some of which are shown in Figure 6).

Table 8: 500-HP GuideALink Positions for Flown M'elodies

GuideALink Positions			Angle for Flown M'elodie
Back	Middle (Attached to Rear Slot)	Front (Attached to Front Slot)	
Stowed	C	A	+5° (uptilt)
Stowed	B	A	0°
Stowed	C	B	0°
Stowed	A	A	–5° (downtilt)
Stowed	B	B	–5° (downtilt)
Stowed	C	C	–5° (downtilt)
Stowed	A	B	–10° (downtilt)
Stowed	B	C	–10° (downtilt)
Stowed	A	C	–15° (downtilt)

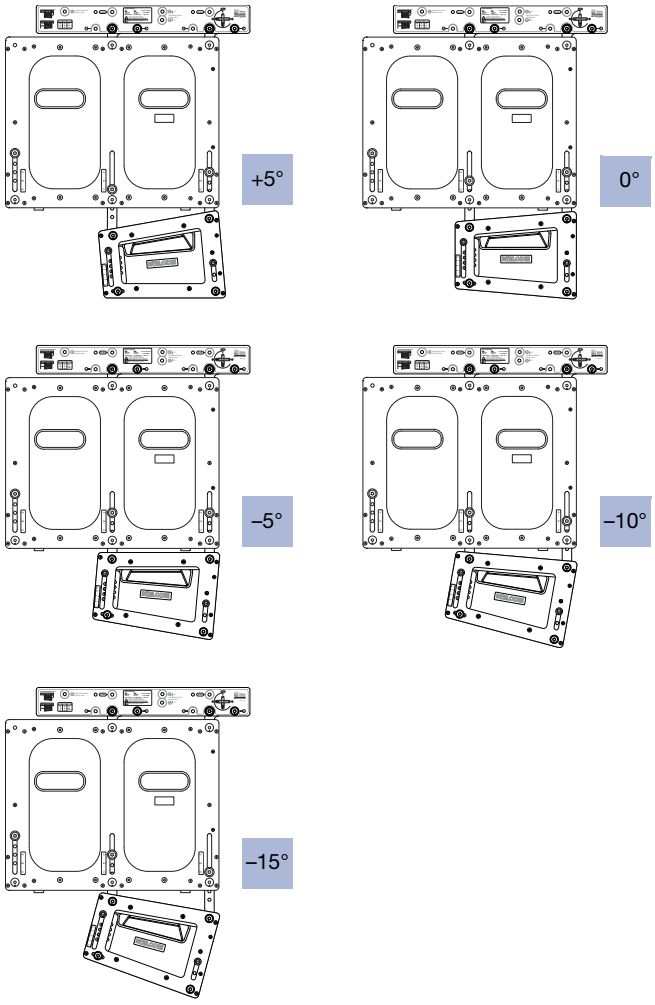

Figure 6: Angles for Flown M'elodie

500-HP Load Ratings

Table 9 lists the maximum number of M'elodies that can be safely suspended from a 500-HP. For MG-M'elodie load ratings, see "MG-M'elodie Grid Load Ratings" on page 26

Table 9: 500-HP Load Ratings for M'elodie Arrays

Safety Factor	M'elodies
5:1	15
7:1	12

CAUTION: When using 500-HP and M'elodie arrays with the MG-M'elodie grid, never exceed the load rating for the grid or the 500-HP.

500-HP CARDIOID ARRAYS

500-HP subwoofers can be configured in cardioid arrays to reduce the amount of output heard behind the subwoofers. Subwoofer cardioid arrays are archived by placing three units coplanar to each other (in either a groundstacked or flown array) with one unit facing the opposite direction. The output of the reversed subwoofer cancels the output of the other subwoofers normally present behind the units.

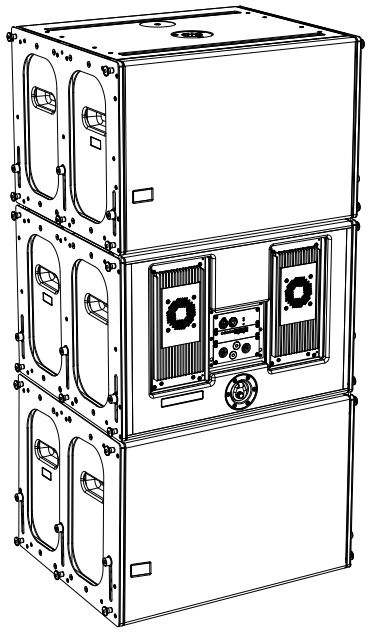

500-HP Cardioid Array

NOTE: To achieve an accurate cardioid pattern, a Galileo 616 is required. Use MAPP Online Pro to calculate the appropriate ratio of forward to rear facing loudspeakers, as well as the required Galileo parameter settings for polarity, delay, and gain. For more information, contact Meyer Sound Technical Support.

THE MCF-500 CASTER FRAME

The heavy-duty MCF-500 caster frame can transport stacks of up to three 500-HP subwoofers (fitted with or without MRF-500 rigging frames). The caster frame can also be used for groundstacking 500-HPs, though this option requires that the four wheels be safely blocked.

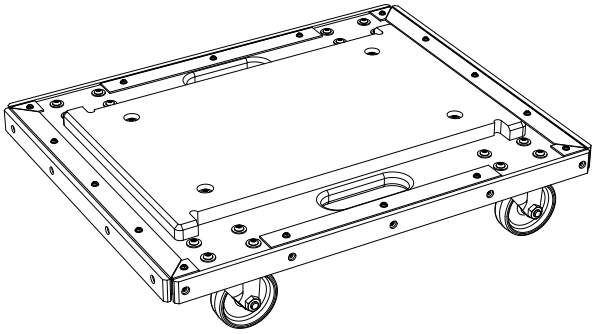

MCF-500 Caster Frame

When transporting 500-HP stacks with the caster frame, straps are highly recommended (see Figure 7), especially for units without the MRF-500 rigging frames. When transporting 500-HPs fitted with rigging frames, pin the GuideALinks so the units are at 0 degrees to each other, thereby ensuring their center of gravity is near the center of the caster frame.

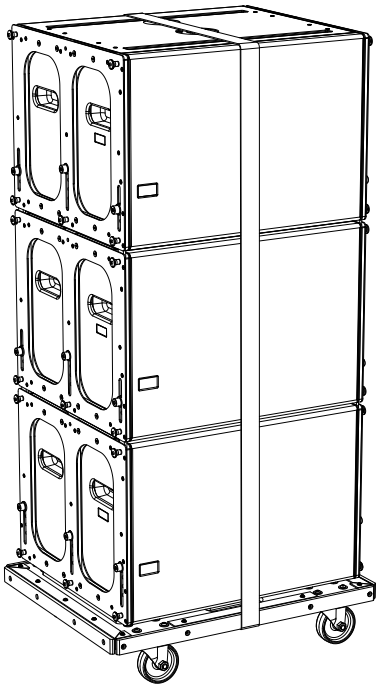

Figure 7: MCF-500 Caster Frame with 500-HP Stack and Straps

NOTE: For the MCF-500 caster frame dimensions and weight, see "MCF-500 Caster Frame Specifications" on page 46.

Safety Guidelines for Using the MCF-500 Caster Frame

- Do not stack more than three 500-HPs.
- When transporting stacks, use straps to secure the 500-HPs, especially if the cabinets are not fitted with the MRF-500 rigging frames.
- When transporting 500-HPs fitted with rigging frames, pin the GuideALinks so the units are at 0 degrees to each other, thereby ensuring their center of gravity is near the center of the caster frame.
- Avoid moving stacks in the front-to-back direction of the 500-HPs (the long side); always move stacks sideways to avoid tipping.

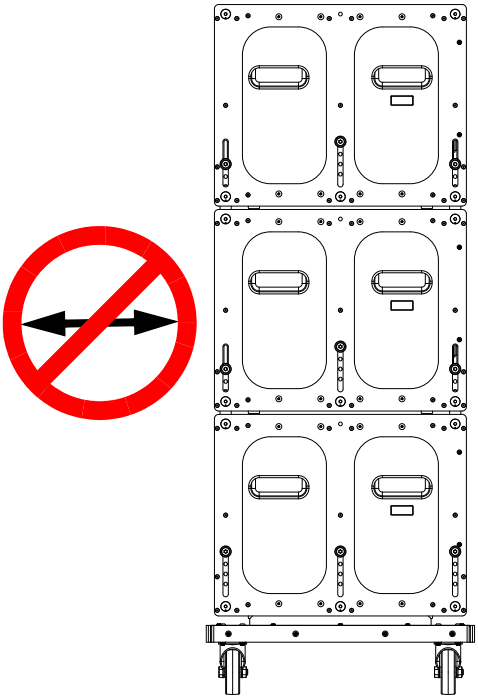

- When using the caster frame to groundstack 500-HPs, make sure all four caster wheels are blocked to prevent the stack from rolling away.

TIP: The MG-M'elodie multipurpose grid can travel installed on top of the 500-HP stack.

POLE-MOUNT RECEPTACLE

You can mount a Meyer Sound UltraSeries loudspeaker on top of the 500-HP with a third-party heavy-duty pole and pole-mount adapter: The 500-HP's pole-mount receptacle is rated at 150 lbs (68.04 kg).

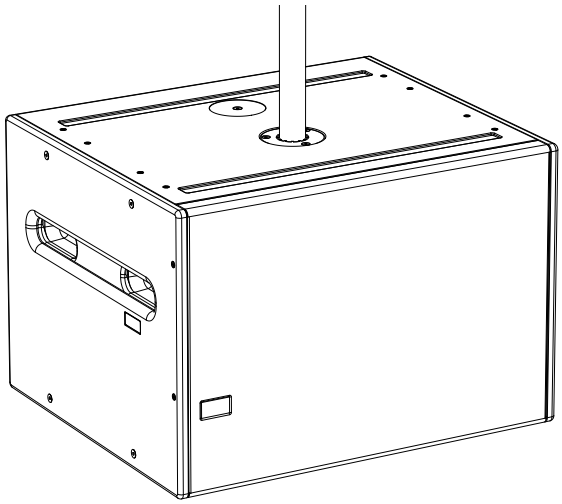

500-HP Pole-Mount Receptacle

The following UltraSeries loudspeakers can be mounted on top of the 500-HP. Make sure that the pole and pole-mount adapter can support the weight of the mounted loudspeakers and that they are installed according to the manufacturer's instructions.

Table 10: Recommended 500-HP Subwoofer Ratios

Loudspeaker	Number of Loudspeakers	Weight
UPQ-1P UPQ-2P	1	108 lbs (49.00 kg)
UPA-1P UPA-2P	1	77 lbs (34.93 kg)
UPJ-1P	1	46 lbs (20.87 kg)
	2 (with MAA-UPJ array adapter)	100 lbs 45.36 (kg)
UPJunior	1	28 lbs (12.70 kg)
	2 (with MUB-UPJunior U-bracket and MAAM-UPJunior array adapter)	70 lbs (31.75 kg)

CAUTION: Make sure the pole and pole-mount adapter can support the total weight of the mounted loudspeakers. Observe all safety precautions specified by the pole manufacturer.

CHAPTER 6: THE RMS REMOTE MONITORING SYSTEM

An optional RMS remote monitoring system module can be installed in the 500-HP, allowing it to be connected to an RMS network. RMS allows real-time monitoring of multiple Meyer Sound self-powered loudspeakers from a Windows-based computer. The RMS host computer communicates with Meyer Sound loudspeakers (equipped with RMS modules) via a simple twisted pair network, or an Ethernet network using an FT-10 to Ethernet adapter.

NOTE: For the latest RMS system requirements, visit the Meyer Sound website (http://www.meyersound.com).

NOTE: RMS-equipped loudspeakers include a Mute Jumper to enable the loudspeaker's mute and solo capability. Meyer Sound currently ships RMS-equipped loudspeakers with the Mute Jumper installed. These mute-enabled loudspeakers can be identified by the blue "ME" sticker on the face of the RMS module. Older RMS-equipped loudspeakers can easily be mute-enabled by installing the Mute Jumper. For more information, refer to the *RMS User Guide*.

NOTE: The RMS software allows you to disable Mute and Solo functions to eliminate any possibility of accidentally muting loudspeakers. Mute and solo capability can also be disabled by removing the Mute Jumper from RMS modules. For more information, refer to the *RMS User Guide*.

NOTE: RMS does not control AC power.

THE RMS SOFTWARE

The optional RMS software provides extensive system status and performance data for each loudspeaker, including amplifier voltage, limiting activity, power output, fan and driver status, as well as mute and solo capability. Loudspeakers are added to the RMS network and assigned a node name during a one-time commissioning procedure where the loudspeaker is identified by either entering its unique Neuron ID, or by pressing its Service button.

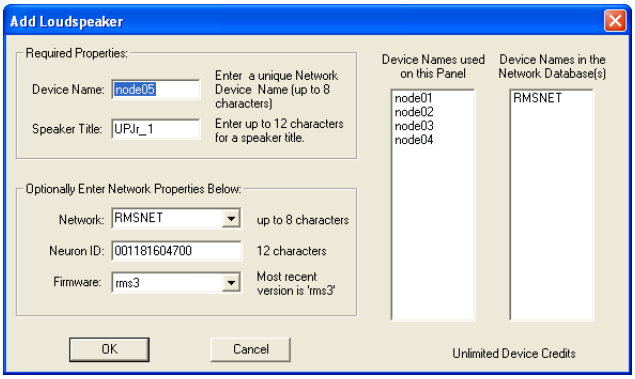

RMS Add Loudspeaker Dialog Box

Once loudspeakers are identified on the RMS network, they appear in the RMS software as icons and views; they are also automatically added to the RMS database on the host computer.

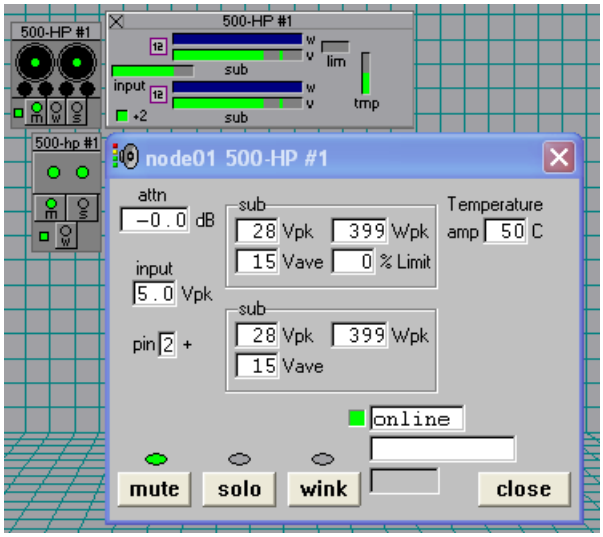

500-HP RMS Icon

The RMS software displays all loudspeakers on the network in a panel with icons, Meter views, and Text views that can be customized to suit your needs. Loudspeaker data is updated 2–5 times per second. Individual loudspeakers can be physically identified with the Wink option in RMS, which lights the Wink LED on the RMS module for that particular loudspeaker. Conversely, a loudspeaker can be identified in the RMS software by pressing the Service button on the loudspeaker's RMS module.

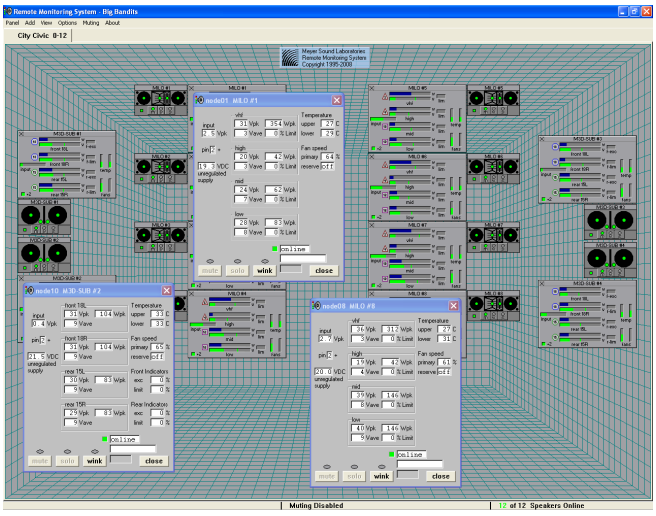

RMS User Panel

Loudspeaker icons and views can be arranged to represent how the loudspeakers have been deployed in the system. Multiple panels can be saved and recalled for specific performances and venues.

NOTE: When the heatsink for a 500-HP subwoofer reaches 85° C (185° F), the On/Temp LED turns red, while its loudspeaker icon in the RMS software turns yellow — indicating the loudspeaker is running hot, but still within safe operating limits. Make sure that the loudspeaker is properly ventilated.

THE RMS MODULE

The RMS module is installed in the bottom slot of the user panel on the back of the Meyer Sound loudspeaker. The RMS user panel has three LEDs, two buttons, and two Network connectors.

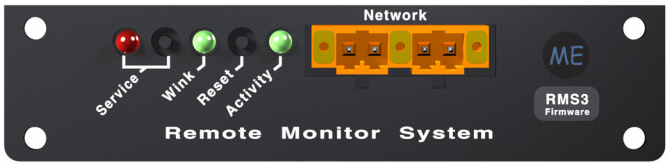

RMS Module

NOTE: The LEDs and buttons on the RMS user panel are used exclusively by RMS and have no effect on the acoustical or electrical activity of 500-HP subwoofers.

Service LED (Red)

The red Service LED provides the following feedback:

- When unlit, the loudspeaker is successfully connected to the network and commissioned.
- When blinking once every two seconds, the loudspeaker is connected to the network but not yet commissioned in the RMS software.
- When lit continuously, the loudspeaker's RMS hardware has failed and may indicate that the module has been damaged (contact Meyer Sound Technical Support).

Service Button

Pressing the Service button identifies the loudspeaker on the RMS network and notifies the RMS software that the loudspeaker is connected. You can simultaneously press the Reset and Service buttons to reset the RMS module and decommission the loudspeaker from the network (see "Resetting the RMS Module" on page 35).

Wink LED (Green)

The green Wink LED lights when a signal is sent from the RMS software by clicking the Wink button on the loudspeaker's icon or on its Text view. This is useful for identifying the physical loudspeaker corresponding to a loudspeaker icon in the RMS software.

Reset Button

Pressing the Reset button causes the RMS module's firmware to reboot; this will not affect whether the loudspeaker is commissioned (which is stored in flash memory). You can simultaneously press the Reset and Service buttons to reset the RMS module and decommission the loudspeaker from the network (see "Resetting the RMS Module" on page 35).

Activity LED (Green)

The green Activity LED flashes continuously when the loudspeaker has been successfully commissioned.

Network Connectors

The two bi-directional Weidmuller locking connectors transfer data to and from the RMS network. Two connectors are provided to allow for easy connection of multiple (daisy-chained) loudspeakers on the network.

RESETTING THE RMS MODULE

You can use the Reset and Service buttons to reset the RMS module, which will cause the module to be decommissioned from the network.

To reset the RMS module:

1. Press and hold the Service button for 10 seconds.
2. While continuing to hold down the Service button, press and hold the Reset button for 5 seconds.
3. After releasing the Reset button, continue holding down the Service button for 5 seconds. The RMS module is reset and the loudspeaker is decommissioned. The RMS module's red Service LED blinks.

CHAPTER 7: SYSTEM DESIGN AND INTEGRATION TOOLS

Meyer Sound offers two comprehensive tools to assist with the acoustical and functional requirements of system design and optimization. This chapter introduces MAPP Online Pro, Meyer Sound's patented online acoustical prediction tool, and SIM 3, a comprehensive system for measurement and analysis.

MAPP ONLINE PRO

MAPP Online Pro is a powerful, cross-platform, Java-based application for accurately predicting the coverage pattern, frequency response, impulse response, and maximum SPL output of single and arrayed Meyer Sound loudspeakers.

Residing on your local computer, the MAPP Online Pro client lets you configure Meyer Sound loudspeaker systems and define the environment in which they will operate, including air temperature, pressure, humidity, and even the location and composition of walls. CAD (DXF) files containing detailed venue information can also be imported.

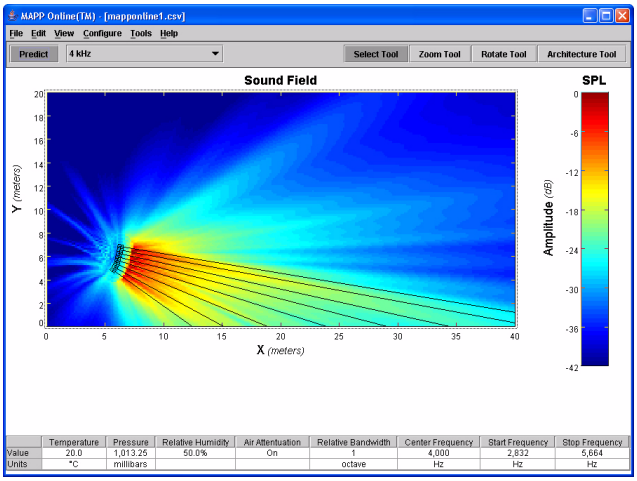

MAPP Online Pro

Whether planning for fixed installations or tours with multiple venues, sound system designers can use MAPP Online Pro to accurately predict the appropriate loudspeaker deployment for each job, complete with coverage data, system delay and equalization settings, rigging information, and detailed design illustrations. MAPP Online Pro's accurate, high-resolution predictions ensure that systems will perform as expected, thereby eliminating unexpected coverage problems and minimizing on-site adjustments.

The key to the accuracy of MAPP Online Pro's predictions is its exhaustive database of Meyer Sound loudspeaker measurements. Performance predictions for each loudspeaker are based on 360 1/48th-octave-band measurements taken with a SIM audio analyzer in the Meyer Sound anechoic chamber. The extraordinary consistency between Meyer Sound loudspeakers guarantees that predictions from MAPP Online Pro will closely match their actual performance.

MAPP Online Pro predictions are requested by the client software and sent via the Internet to the high-speed Meyer Sound servers where high-resolution (magnitude and phase) polar data is processed with sophisticated acoustical prediction algorithms. The resulting predictions are then returned to and displayed on the local computer running the MAPP Online Pro client software.

MAPP Online Pro Applications

With MAPP Online Pro, you can:

- Simulate different loudspeaker configurations to refine system design and zero-in on the best coverage for intended audience areas
- Monitor loudspeaker interactions to locate destructive interferences so that loudspeakers can be re-aimed and repositioned as necessary
- Place microphones anywhere in the sound field and predict their frequency response, impulse response, and sound pressure
- Determine delay settings for fill loudspeakers
- Try out virtual Galileo equalization to determine optimum real-world settings for the best system response
- Automatically calculate load information for arrays to determine rigging capacities, front-to-back weight distribution, and center of gravity
- Generate and export system images for client presentations

Using MAPP Online Pro

MAPP Online Pro is compatible with the following operating systems:

- Windows
- Linux®
- Unix®
- Mac OS® 10.4 and later

Additional system requirements and recommendations are available on the MAPP Online Pro website:

http://www.meyersound.com/products/mapponline/pro/

Downloading and Installing MAPP Online Pro

To use MAPP Online Pro, you can register at the following link:

http://www.meyersound.com/products/mapponline/pro/register/

After entering your registration information, an email will be sent to you with your user name, password, and the MAPP Online Pro download location. On-screen instructions will guide you through the download and installation process.

The MAPP Online Pro client software is regularly upgraded to add support for the latest Meyer Sound loudspeakers, as well as to add feature enhancements. Most upgrades are downloaded automatically when launching a MAPP Online Pro session. The MAPP Online Pro database includes nearly all of the current Meyer Sound loudspeakers, subwoofers, and processors.

THE SIM 3 MEASUREMENT SYSTEM

The SIM 3 audio analyzer is a high-resolution audio measurement system comprised of software, hardware, microphones, and accessory cables. SIM 3 is optimized for measuring audio frequencies with resolutions up 1/48th of an octave, allowing you to apply precise corrections to balance system response using frequency and phase domain information.

Source Independent Measurement Technique

The SIM 3 audio analyzer implements Meyer Sound's source independent measurement technique, a dual-channel method that accommodates statistically unpredictable excitation signals. Any excitation signal within a desired frequency range can be used to obtain highly accurate measurements for acoustical or electronic systems. For example, concert halls and loudspeaker systems can be captured during a performance and used as a SIM 3 test signal, so you can:

- View measurement data as amplitude versus time (impulse response) or amplitude and phase versus frequency (frequency response)
- Utilize a single-channel spectrum mode
- View frequency domain data with a logarithmic frequency axis
- Determine and internally compensate for propagation delays using the SIM 3 Delay Finder

SIM 3 Applications

SIM 3's main applications are testing and aligning loudspeaker systems, which entails:

- Measuring propagation delays between subsystems to determine appropriate polarities and delay times
- Measuring variations in frequency response caused by the acoustical environment and the placement and interaction of loudspeakers to determine corrective equalization
- Optimizing subwoofer integrations
- Optimizing loudspeaker arrays

SIM 3 can also be used in the following applications:

- Microphone calibration and equalization
- Transducer evaluation and correction
- Echo detection and analysis
- Vibration analysis
- Architectural acoustics
- Underwater acoustics

APPENDIX A: OPTIONAL VEAM MULTIPIN CONNECTOR

The 500-HP subwoofer requires a grounded outlet. It is very important that the system be properly grounded in order to operate safely and properly. Figure 8 illustrates correct wiring for the creation of power cables and distribution systems for 500-HP subwoofers equipped with VEAM multipin connectors.

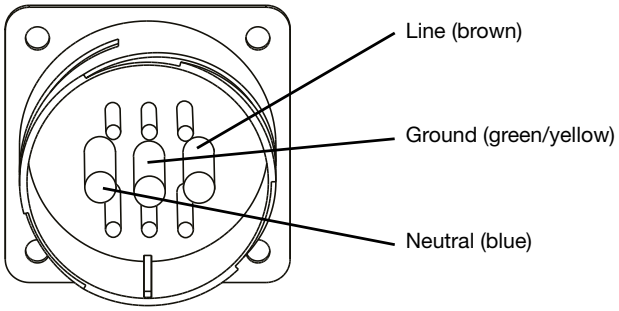

Figure 8: VEAM Multipin Connector Pin-Outs for Power

For complete VEAM wiring conventions and pin-outs for AC, audio, and RMS connections, refer to the Meyer Sound document VEAM Cable Wiring Reference (PN 06.033.113.01).

Meyer Sound offers the VIM-4 VEAM interface module with four VEAM connectors in the front and a single-phase IEC 309 32-amp connector in the rear to distribute power, audio, and RMS to 500-HP subwoofer systems equipped with VEAM connectors.

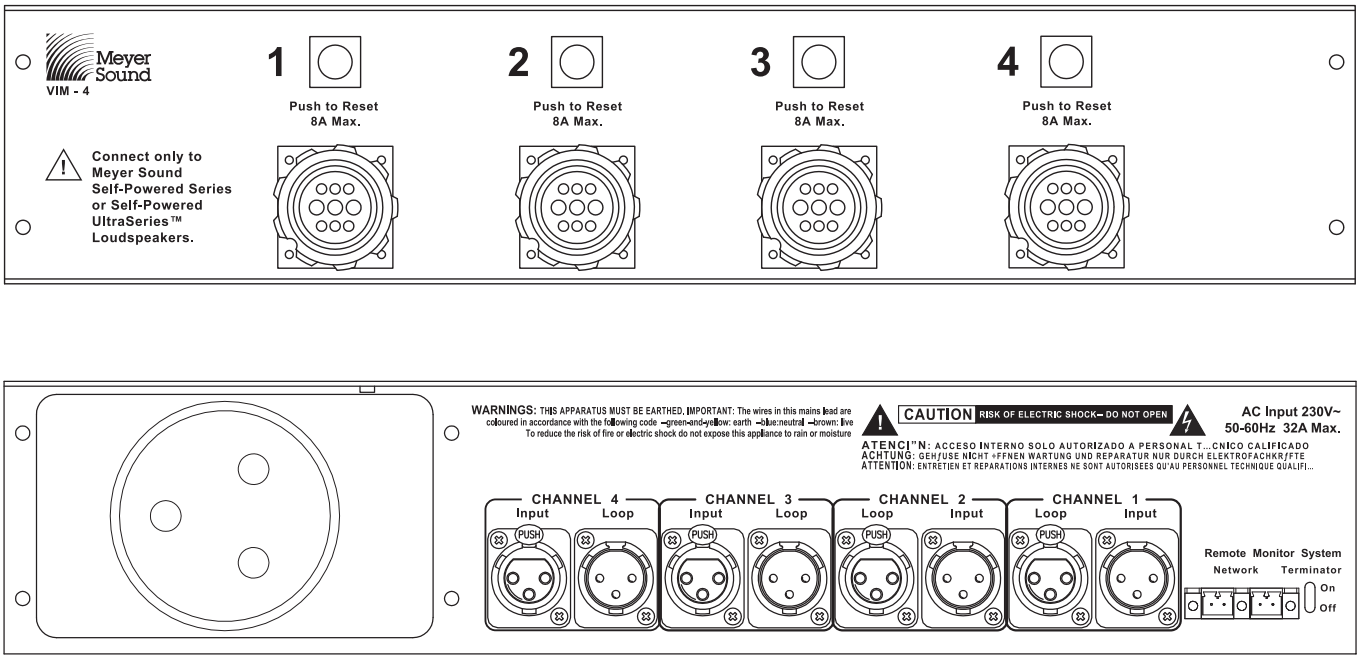

VIM-4 Module, Front and Rear Panels

APPENDIX B: OPTIONAL RAIN HOOD

Weather-protected versions of the 500-HP subwoofer are available with rain hood kits that safeguard the subwoofer's electronics from the elements in fixed, outdoor installations. The rain hood kit is comprised of two heat sink rain hoods that protect the heat sinks, and one user panel rain hood that protects the user panel and connectors. The rain hoods are made of a durable, high-impact polycarbonate that is also transparent, allowing the loudspeaker's connections and LEDs to be visible.

THE 500-HP RAIN HOOD KIT CONTENTS

The 500-HP rain hood kit (PN 40.187.059.01) includes the following parts:

500-HP Rain Hood Kit

Part	Part Number	Quant.
Heat sink rain hood assembly	45.185.084.02	2
Heat sink rain hood frame	45.185.084.01	2
User panel rain hood assembly	45.152.031.01	1
Flat head screws, 8-32 x .25"	101.827	8
Pan head screws, 8-32 x .50"	101.008	4
Lock pins, 5/16" x .63"	134.024	2

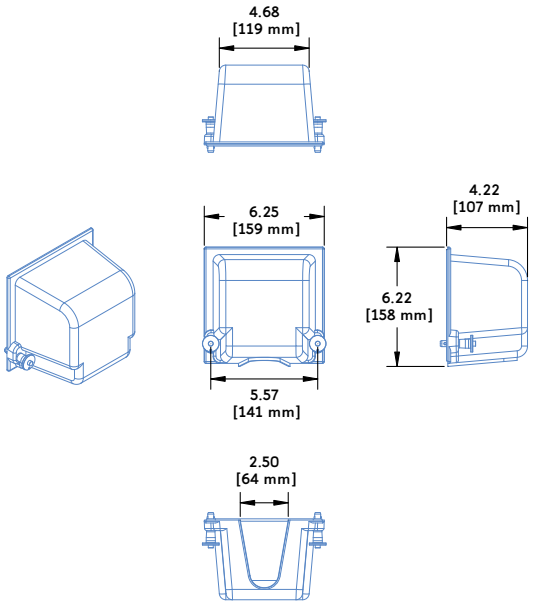

500-HP User Panel Rain Hood Assembly

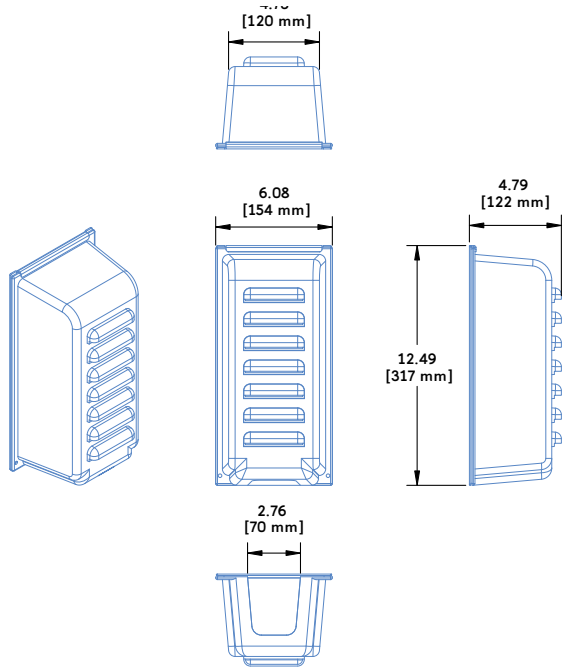

500-HP Heat Sink Rain Hood Assembly

INSTALLING THE 500-HP RAIN HOODS

To install the 500-HP rain hoods:

1. Attach any required cables to the loudspeaker.
2. Remove the bottom two pan head screws from each amplifier face.

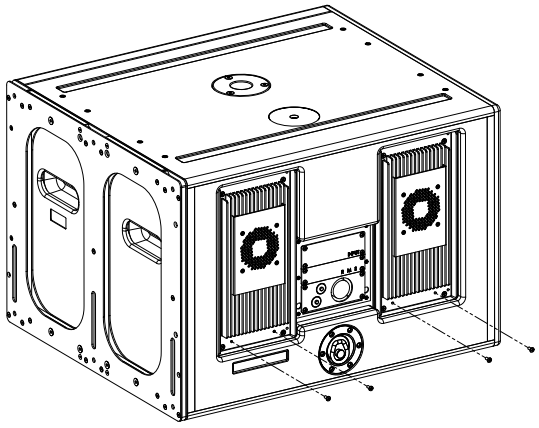

3. Attach the user panel rain hood assembly to the user panel, slipping it under the flange at the top of the panel and securing it to the bottom with the two lock pins.

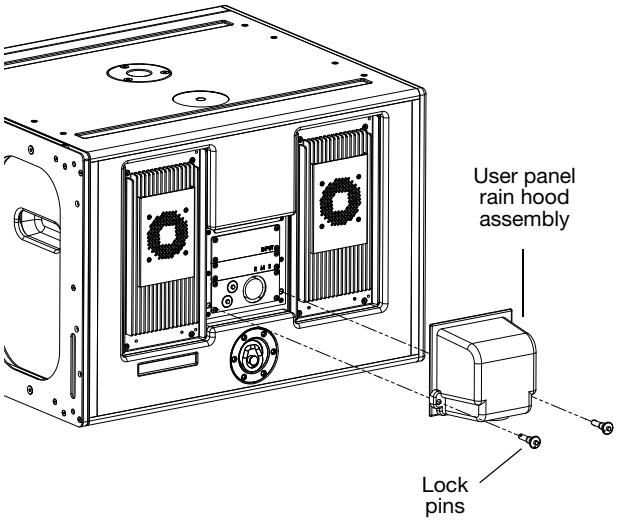

4. Secure the two heat sink hood frames to the two amplifier faces with the 8-32 x .25 flat head screws, two each at the top and bottom of the frames.

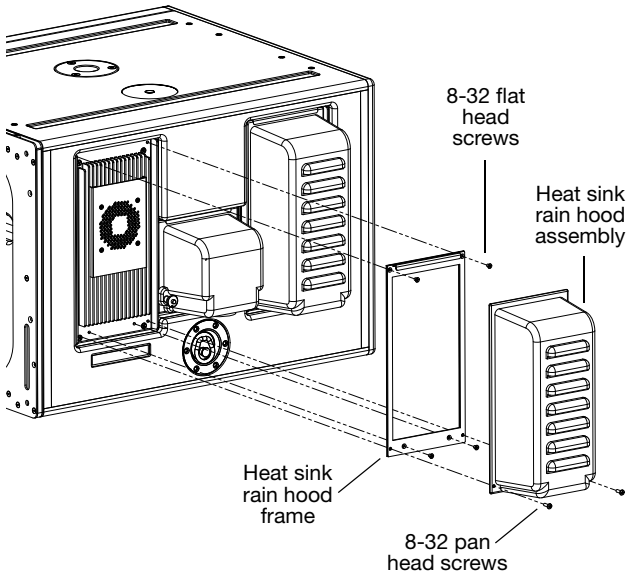

5. Attach the heat sink rain hood assemblies to the rain hood frames, slipping them under the frames' top flange and securing them to the bottom with the 8-32 x .50 pan head screws (two each).

APPENDIX C: SPECIFICATIONS

500-HP COMPACT HIGH-POWER SUBWOOFER SPECIFICATIONS

500-HP Specifications

ACOUSTICAL	
Operating Frequency Range	35 Hz – 140 Hz **Note:** Recommended maximum operating frequency range. Response depends on loading conditions and room acoustics.
Frequency Response	36 Hz – 130 Hz ±4 dB **Note:** Measured free field with 1/3 octave frequency resolution at 4 meters.
Phase Response	45 Hz to 125 Hz ±30°
Maximum Peak SPL	135 dB **Note:** Measured with music, referred to 1 meter, half-space loading.
Dynamic Range	>110 dB
Coverage	360° for a single unit; varies with number of units and configurations
TRANSDUCERS	
Low Frequency	Two 12” cone drivers with ceramic magnets Nominal impedance: 2 Ω Voice coil size: 4” Power-handling capability: 1200 W (AES) each **Note:** Power handling measured using AES standards: transducer driven continuously for two hours with band limited noise signal having a 6 dB peak-average ratio.
AUDIO INPUT	
Type	Differential, electronically balanced
Maximum Common Mode Range	±15 V DC, clamped to earth for voltage transient protection
Connectors	Female XLR input with male XLR loop output or VEAM all-in-one (integrates AC, audio, and network)
Input Impedance	10 kΩ differential between pins 2 and 3
Wiring	Pin 1: Chassis/earth through 220 kΩ, 1000 pF, 15 V clamp network to provide virtual ground lift at audio frequencies Pin 2: Signal + Pin 3: Signal – (optional polarity switch) Case: Earth ground and chassis **Note:** An additional input module option is available with a polarity switch and an attenuator (0 dB to –18 dB).
DC Blocking	Differential DC blocking up to maximum common mode voltage
CMRR	>50 dB, typically 80 dB (50 Hz – 500 Hz)
RF Filter	Common mode: 425 kHz Differential mode: 142 kHz
TIM Filter	<80 kHz, integral to signal processing
Nominal Input Sensitivity	0 dBV (1 V rms, 1.4 V peak) continuous is typically the onset of limiting for noise and music
Input Level	Audio source must be capable of producing +20 dBV (10 V rms, 14 V peak) into 600 Ω to produce the maximum peak SPL over the operating bandwidth of the loudspeaker

500-HP Specifications

AMPLIFIER	
Type	Two-channel complementary MOSFET output stages (class AB/H)
Output Power	1800 W total (2 x 900 W) **Note:** Wattage rating based on the maximum unclipped burst sine-wave rms voltage the amplifier will produce into the nominal load impedance; both channels 42 V rms into 2 ohms.
Total Output	3600 W peak **Note:** Peak power based on the maximum unclipped peak voltage that the amplifier will produce for at least 100 milliseconds into the nominal load impedance; both channels, 60 V peak into 2 ohms.
THD, IM TIM	<.02%
Load Capacity	2 Ω each channel
Cooling	Convection at low to mid audio levels; fan-assisted only at high audio levels **Note:** Fan controlled by audio level; remains off at turn-on and at low to mid audio levels. Fan operation at high audio levels makes it virtually inaudible.
AC POWER	
Connectors	PowerCon with looping output or VEAM all-in-one (integrates AC, audio, and network)
Voltage Selection	Automatic, two ranges, each with high-low voltage tap (uninterrupted)
Safety Agency Rated Operating Voltage	95–125 V AC; 208–235 V AC; 50/60 Hz
Turn On/Turn Off Points	85–134 V AC; 165–264 V AC
Note: No automatic turn-off voltages. Voltages above 265 V AC are fuse protected but may cause permanent damage to the power supply. Voltages below 90 V AC may result in intermittent operation.	
Current Draw	
Idle Current	0.49 A rms (115 V AC); 0.26 A rms (230 V AC); 0.55 A rms (100 V AC)
Maximum Long-Term Continuous Current	8.4 A rms (115 V AC); 4.2 A rms (230 V AC); 9.7 A rms (100 V AC)
Burst Current	18 A rms (115 V AC); 9 A rms (230 V AC); 21 A rms (100 V AC) **Note:** AC power cabling must be of sufficient gauge so that under burst current rms conditions, cable transmission losses do not cause the voltage to drop below specified operating range at the speaker.
Ultimate Short-Term Peak Current	40 A peak (115 V AC); 22 A peak (230 V AC); 46 A peak (100 V AC)
Inrush Current	10 A peak (115 V AC); 13 A peak (230 V AC); 10 A peak (100 V AC)
Note: Current draw for a single loudspeaker. Loop output not used.	
PHYSICAL	
Enclosure	Premium birch plywood
Finish	Black textured, hard-shell
Protective Grille	Powder-coated, hex-stamped steel black mesh screen
Rigging	Integral 1-1/2-inch (38 mm) pole-mount receptacle on top; optional QuickFly MRF-500 rigging frame for arrays with M'elodie curvilinear loudspeakers; rigging frame also compatible with MG-M'elodie multipurpose grid
Dimensions	26.55" w x 18.23" h x 22.50" d (674 mm x 463 mm x 572 mm)
Dimensions w/rigging	28.27" w x 18.23" h x 22.50" d (718 mm x 463 mm x 572 mm)
Weight	Weight 133 lbs (60.32 kg); with rigging, 164 lbs (74.38 kg)

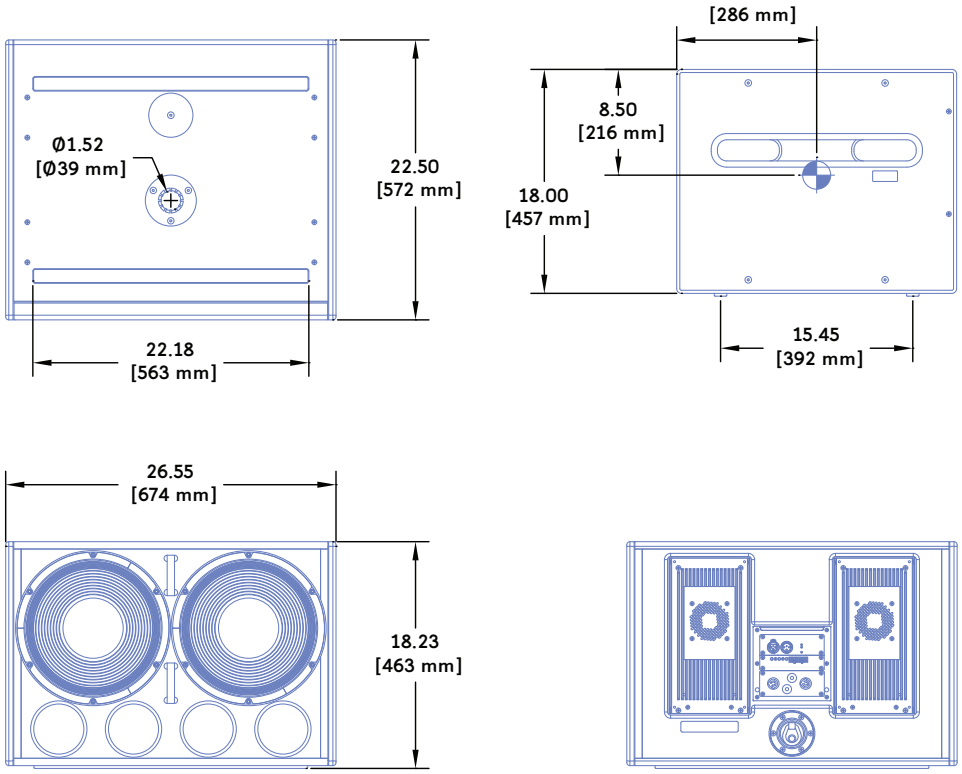

500-HP Dimensions

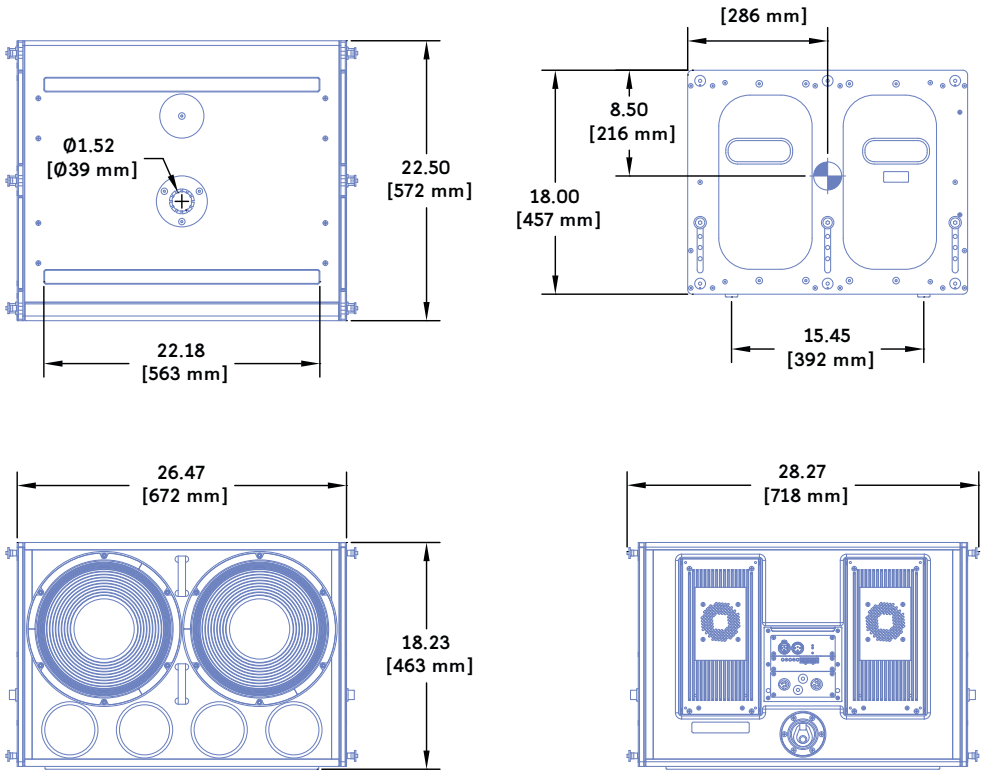

500-HP Dimensions with Rigging

MCF-500 CASTER FRAME SPECIFICATIONS

MCF-500 Specifications

PHYSICAL	
Materials and Components	Premium birch plywood base with black finish; steel-reinforced brackets; high-density polyethylene protective bumpers on all four sides.
Dimensions	30.22" w x 6.63" h x 23.96" d (768 mm x 168 mm x 609 mm)
Weight	Weight 39 lbs (17.69 kg)

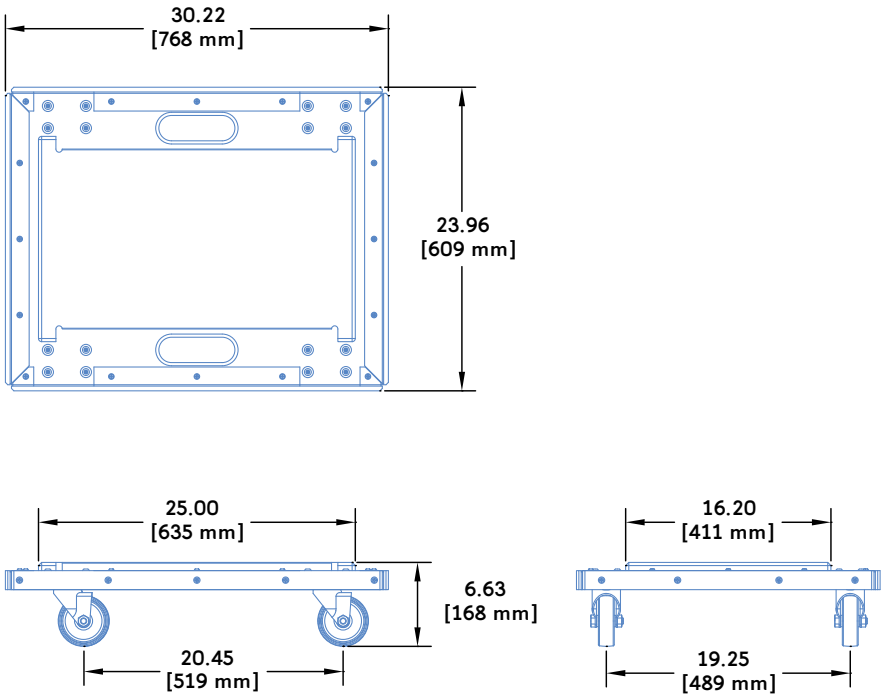

MCF-500 Caster Frame Dimensions

thinking sound

Meyer Sound Laboratories Inc.
2832 San Pablo Avenue
Berkeley, CA 94702

www.meyersound.com
T: +1 510 486.1166
F: +1 510 486.835

© 2009
Meyer Sound. All rights reserved.
500-HP — 05.187.045.01 A