ASSEMBLY GUIDE

MTG-1100 Top Grid and Rigging Accessories

thinking sound Meyer Sound

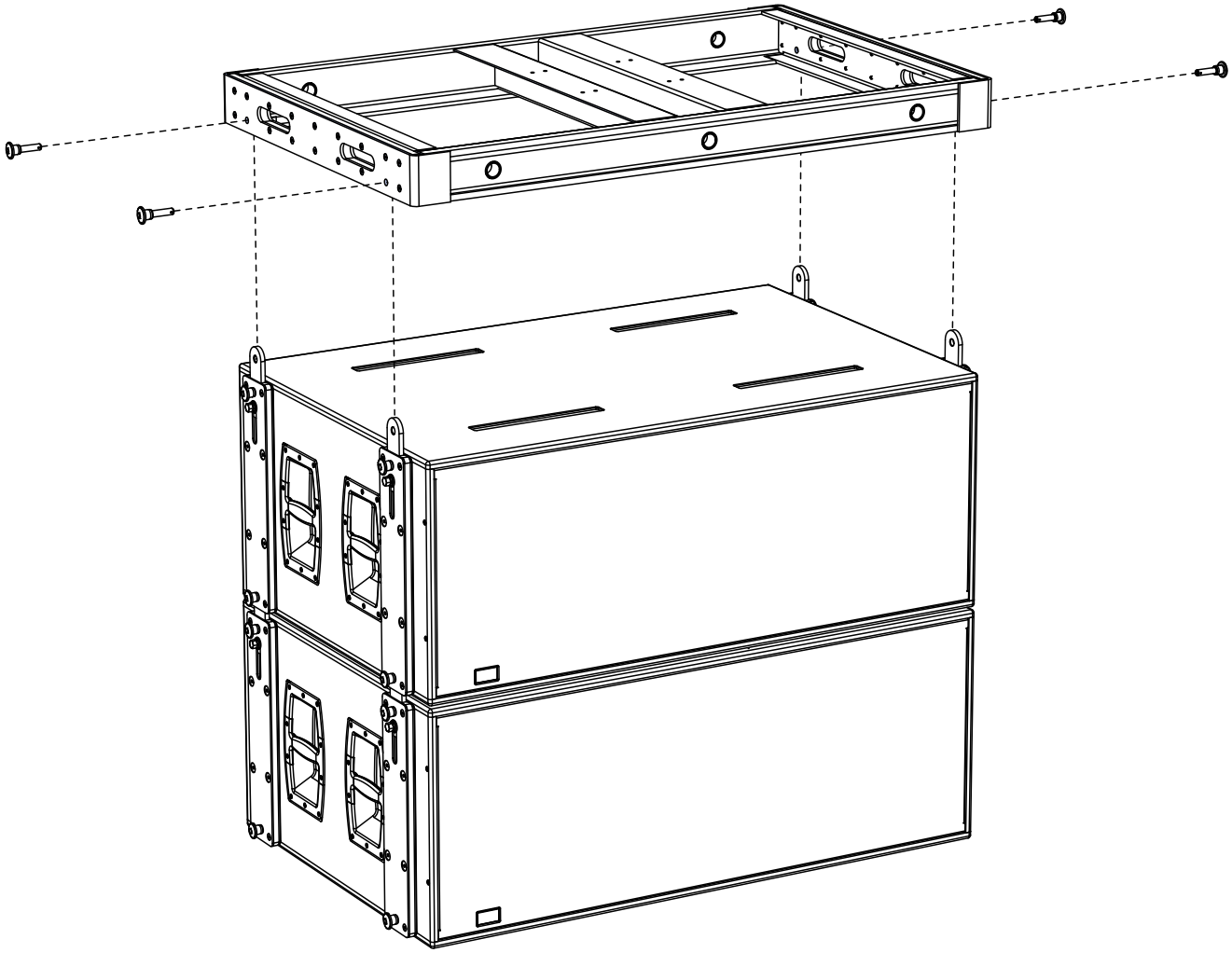

Keep these important operating instructions.
Check www.meyersound.com for updates.

EC DECLARATION OF CONFORMITY

within the meaning of the EC Machine Directive 2006/42/EC

Product Identification

Product Name / Cat. Number:	MRK-1100 Rigging Kit / 40.220.027.01
Product Name / Cat. Number:	MTG-1100 Top Grid / 40.220.030.01
Brand:	Meyer Sound Laboratories
Batch / Serial Nr:	See batch or serial number on item.

For use with 1100-LFC series loudspeaker factory rigging.

Manufacturer

Name:	Meyer Sound Laboratories
Address:	2832 San Pablo Avenue Berkeley, CA 94702-2204, USA
Country:	United States of America
Representative:	Meyer Sound Laboratories

Authorized Representative/Distributor in Europe

Representative:	Meyer Sound Lab. GmbH Horresser Berg 4A, 56410 Montabaur
Country:	Germany

Means of Conformity

Meyer Sound Laboratories declares that the product listed is in conformity with the essential requirements and provisions of Council Machine Directive 2006/42/EC SAFETY OF MACHINERY by type testing, and conformity with National standards and technical specifications applied, in particular: EN 292, DIN 18800, BGV C1. Professional installation is required per this Assembly Guide.

Signed:



Name:	Ms. Margie Garza, Director of Quality
Place and Date:	Berkeley, California, USA. October 12, 2012

© 2012
Meyer Sound. All rights reserved.
MTG-1100 Assembly Guide, PN 05.220.030.01 A

The contents of this manual are furnished for informational purposes only, are subject to change without notice, and should not be construed as a commitment by Meyer Sound Laboratories Inc. Meyer Sound assumes no responsibility or liability for any errors or inaccuracies that may appear in this manual. Except as permitted by applicable copyright law, no part of this publication may be reproduced, stored in a retrieval system, or transmitted, in any form or by any means, electronic, mechanical, recording or otherwise, without prior written permission from Meyer Sound.

1100-LFC, GuideALink, and all alpha-numeric designations for Meyer Sound products and accessories are trademarks of Meyer Sound. Galileo, MAPP Online Pro, Meyer Sound, the Meyer Sound wave logo, and QuickFly are registered trademarks of Meyer Sound Laboratories Inc. (Reg. U.S. Pat. & Tm. Off.). All third-party trademarks mentioned herein are the property of their respective trademark holders.

CONTENTS

Chapter 1: Introduction 5

How to Use This Manual 5
Safety, Regulatory, Inspection & Maintenance Information 5

Chapter 2: 1100-LFC Groundstacks and Cardioid Arrays 9

Groundstacking 1100-LFC Loudspeakers 9
1100-LFC Cardioid Arrays 10

Chapter 3: MRK-1100 Rigging Kit 11

MRK-1100 Rigging Kit Contents 11
Installing the MRK-1100 Rigging Kit 12
1100-LFC GuideALinks 13

Chapter 4: MTG-1100 Top Grid 15

MTG-1100 Top Grid Load Ratings 17

Chapter 5: MTG-1100 Pickup Configurations 19

Two Pickup Points 19
Three Pickup Points 20
Four Pickup Points 21

Chapter 6: MVP-LEO-M Vee Plate 23

MVP-LEO-M Vee Plate Load Ratings 23

Chapter 7: MAS-1100 Array Spacer 25

Chapter 8: MCF-1100 Caster Frame 27

Safety Guidelines for the MCF-1100 Caster Frame 30

Appendix A: Assembling Arrays with the MTG-1100 Top Grid 31

CHAPTER 1: INTRODUCTION

HOW TO USE THIS MANUAL

Make sure to read these operating instructions in their entirety before configuring a loudspeaker system with 1100-LFC loudspeakers. In particular, pay close attention to material related to safety issues.

As you read these operating instructions, you will encounter the following icons for notes, tips, and cautions:

NOTE: A note identifies an important or useful piece of information relating to the topic under discussion.

TIP: A tip offers a helpful tip relevant to the topic at hand.

CAUTION: A caution gives notice that an action may have serious consequences and could cause harm to equipment or personnel, and could cause delays or other problems.

Information and specifications are subject to change. Updates and supplementary information are available at www.meyersound.com.

Meyer Sound Technical Support is available at:

- **Tel:** +1 510 486.1166
- **Tel:** +1 510 486.0657 (after hours support)
- **Web:** www.meyersound.com/support
- **Email:** techsupport@meyersound.com

SAFETY, REGULATORY, INSPECTION & MAINTENANCE INFORMATION

Please read this Statement carefully and in its entirety. It contains important information regarding safety issues, including guidelines for general safe use of rigging systems as well as advisories on government regulations and liability laws.

Scope of this Manual

Although this manual contains much useful information on rigging in general, it does not claim to be a comprehensive resource on the subject. This manual assumes that the owners and/or users of a QuickFly® system are knowledgeable and experienced in the areas of rigging and flying loudspeaker systems. MANY ISSUES OF CRUCIAL CONCERN, SUCH AS THE DETERMINATION OF APPROPRIATENESS AND CONDITION OF VENUE RIGGING POINTS, CANNOT BE ADDRESSED HERE. THEREFORE, THE USER MUST ASSUME ALL RESPONSIBILITY FOR THE APPROPRIATE USE OF QUICKFLY SYSTEMS IN ANY PARTICULAR LOCATION OR CIRCUMSTANCE.

The suspension of large, heavy objects in public places is subject to numerous laws and regulations at the national/federal, state/provincial, and local levels. This manual does not address the specifics of any such applicable laws and government regulations. This manual details procedures and practices consistent with those generally acknowledged as allowable and safe in the United States. However, the user must assume responsibility for making sure that the use of any QuickFly system and its components in any particular circumstance or venue conforms to all applicable laws and regulations in force at the time.

Load Ratings and Specifications

Long-term safe operation is a central concern in the design and manufacture of any rigging/flying system. Meyer Sound has taken great care in material selection and component design. After manufacture, all load-critical system components are individually inspected.

All load ratings and other specifications given in this manual are the result of accepted engineering practice and careful testing. However, such specifications and ratings are subject to change. USERS SHOULD CHECK THE QUICKFLY SECTION OF THE MEYER SOUND WEBSITE AT

www.meyersound.com

OR CONTACT TECHNICAL SUPPORT AT REGULAR INTERVALS TO CHECK FOR UPDATED OR REVISED INFORMATION.

Regulatory Compliance

The design and safe working load (SWL) ratings of the QuickFly system are intended to be in compliance with all known regulatory statutes currently applicable in the United States. Unless otherwise specified, all working loads are based on either a 5:1 or 7:1 safety factor. However, as noted above, there are wide variations internationally in the regulations and practices applying to suspension of sound systems in public places. Although regulations in the United States are generally among the most stringent, safety codes may be even stricter other localities (such as those highly prone to earthquakes). In addition, applicable safety codes are open to interpretation: Government officials in one location may have a stricter interpretation than another local official, even when operating under the same regulations and in the same legal jurisdiction.

Consequently, users of QuickFly rigging systems should be prepared to take additional safety assurance measures beyond those outlined in this manual. In all cases, it is the responsibility of the user to make certain that any Meyer Sound loudspeaker system is suspended in accordance with all applicable national /federal, state /provincial, and local regulations.

Safety Responsibilities “Above the Hook”

In most touring applications of rigging systems, the touring sound provider is normally responsible for ensuring the safety of the suspension system only below the attachment point. The safety and suitability of the attachment point is generally seen as the responsibility of the venue owner or operator. However, this distinction (“above the hook” versus “below the hook”) can be open to interpretation. Touring system operators should double-check to make certain that attachment points are approved and suitably load rated, and that the points used are those identified as such by the venue owner or operator. AS AN EXTRA PRECAUTION, CAREFUL INSPECTION OF THE ATTACHMENT POINTS IS ADVISED BEFORE FLYING, PARTICULARLY IN OLDER VENUES OR THOSE HOSTING FREQUENT EVENTS USING LARGE SOUND AND LIGHTING SYSTEMS. In any case, Meyer Sound QuickFly systems are intended only for suspension from approved rigging points, each known to have ample SWL margins for the system components suspended below them.

Inspection and Maintenance

Meyer Sound QuickFly systems are an assembly of mechanical devices, and are therefore subject to wear and tear over prolonged use, as well as damage from corrosive agents, extreme impact, or inappropriate use.

BECAUSE OF THE SAFETY ISSUES INVOLVED, USERS MUST ADOPT AND ADHERE TO A SCHEDULE OF REGULAR INSPECTION AND MAINTENANCE. IN TOURING APPLICATIONS, KEY COMPONENTS MUST BE INSPECTED BEFORE EACH USE. Such inspection includes examination of all load-bearing components for any sign of undue wear, twisting, buckling, cracking, rusting, or other corrosion. In regard to rust and corrosion, the main components of a QuickFly system are either protected by an exterior coating or made from stainless steel, which is impervious to rust and resistant to most corrosive fluids. Nevertheless, normal use and shipping vibrations can wear through the protective coatings, and extremely corrosive fluids (such as battery acid) can cause severe damage with prolonged exposure even to protected parts. Particular attention should be given to screws, bolts, and other fasteners to make certain the fittings are tight and secure. Metal seams and welds should be examined for any sign of separation or deformation. Meyer Sound strongly recommends that written documentation be maintained on each QuickFly system, noting date of inspection, name of inspector, points of system checked, and any anomalies discovered.

Annual Comprehensive Examination and Test Program

In addition to routine checks on the road for touring systems, Meyer Sound also recommends a careful, comprehensive system examination and testing “at home” in the warehouse or other appropriate location at regular intervals. Such at home examinations and tests should occur at least once a year, and should include a careful inspection of each component under ideal lighting conditions, and then a final comprehensive check of the entire system after it has been flown.

If any anomalies or defects are discovered that could possibly affect the safety or integrity of the system, affected parts or subsystems should be replaced in their entirety before that part of the system is flown again.

Replacement Parts

Any component found to be defective, or any safety-related component you even suspect might be defective, should be replaced with the equivalent, approved part. Parts specific to a QuickFly system should be ordered directly from Meyer Sound. No attempt should be made to substitute what appears to be equivalent or “mostly the same” generic replacements. Some parts used in QuickFly systems are identical to those used in other rigging applications. To the best of our knowledge, most of these suppliers are reputable and their products are reliable. However, Meyer Sound has no way of assuring the quality of products made by these various suppliers. Therefore, Meyer Sound is not responsible for problems caused by components that were not supplied by Meyer Sound.

Training

QuickFly systems are relatively straightforward and easy to use. However, they should only be used by persons trained in the use of loudspeaker rigging systems who have mastered key points of assembly, rigging, and flying. Users should read this manual in its entirety before attempting to deploy any QuickFly system. You may make additional copies of this manual as necessary for in-house use; copies may not be made for any other purpose.

⚠ **CAUTION:** All Meyer Sound products must be used in accordance with local, state, federal and industry regulations. It is the owner’s and/or user’s responsibility to evaluate the reliability of any rigging method for their application. Rigging should be carried out only by experienced professionals.

⚠ **CAUTION:** Always use properly rated rigging hardware.

⚠ **CAUTION:** It is important to inspect rigging hardware regularly and replace worn or damaged components immediately.

CHAPTER 2: 1100-LFC GROUNDSTACKS AND CARDIOID ARRAYS

GROUNDSTACKING 1100-LFC LOUDSPEAKERS

1100-LFCs can be groundstacked up to four units high, with or without the MRK-1100 rigging kit. Protective, plastic skids are included on the bottom of the 1100-LFC cabinet that securely align with the slots on the cabinet top. Units can be stacked normally or reversed for cardioid configurations. When groundstacking 1100-LFCs, make sure the skids for each unit align with the slots in the cabinet tops.

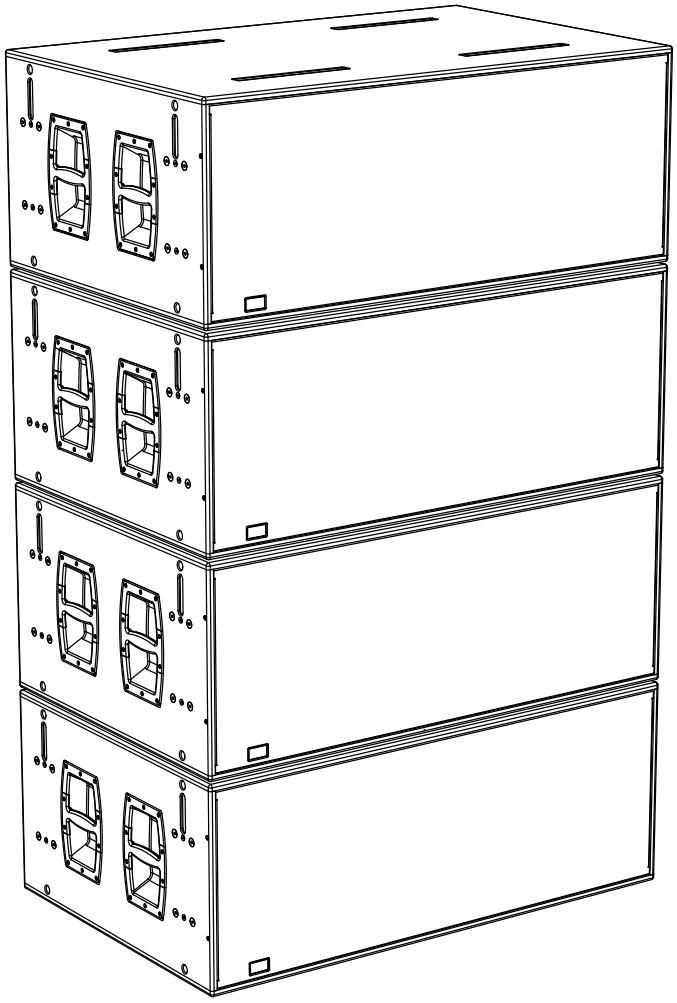

1100-LFC Groundstack

CAUTION: As a safety precaution, to avoid tipping, a maximum of four cabinets is supported for ground-stacked 1100-LFCs.

NOTE: 1100-LFCs need not be equipped with the MRF-1100 rigging kit for secure groundstacking.

1100-LFC CARDIOID ARRAYS

The 1100-LFC low-frequency control element is defined by its sonic linearity in reproducing low-frequency transients at high, continuous output levels with very low distortion. This ultra low distortion, coupled with exceptional headroom and optimized rigging options, makes the 1100-LFC ideal for low-frequency directional applications for large-scale tours and installations.

The 1100-LFC can be configured in cardioid arrays to reduce output heard behind the loudspeakers. The loudspeaker's linearity ensures that cardioid patterns behave accurately even at very high levels. Cardioid arrays are achieved by placing three units coplanar to each other (in either a groundstacked or flown array) with one unit facing the opposite direction. The output of the reversed loudspeaker cancels the output of the other loudspeakers normally present behind the units, while also increasing SPL directed forward.

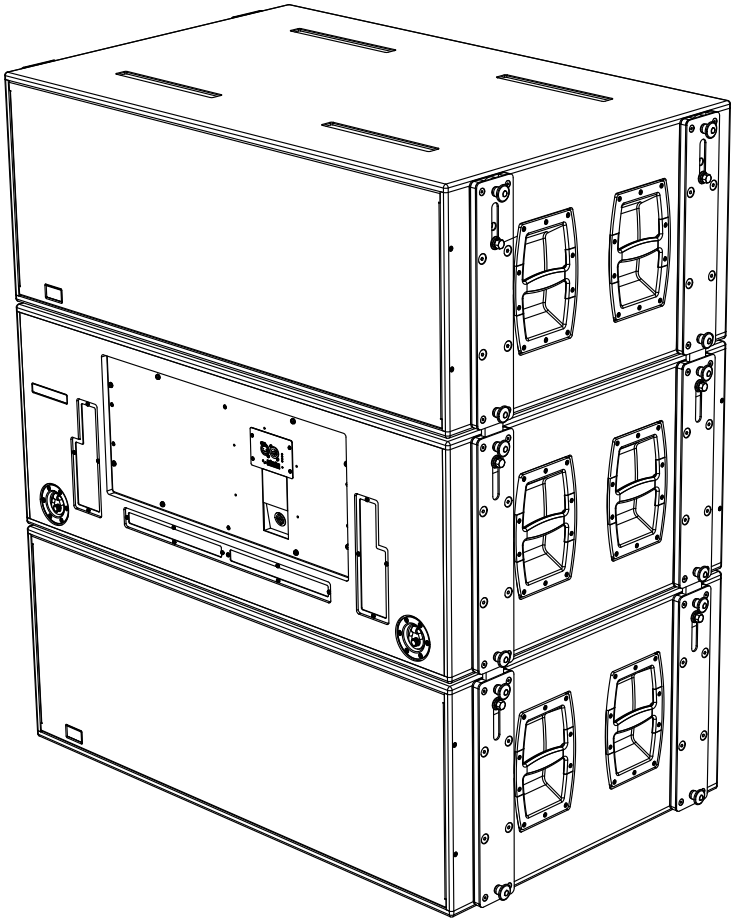

1100-LFC Cardioid Array

NOTE: 1100-LFCs need not be equipped with the MRF-1100 rigging kit for groundstacked cardioid configurations.

NOTE: 1100-LFC cardioid arrays can also be flown with the MTG-1100 top grid. For more information, see Chapter 4, "MTG-1100 Top Grid."

NOTE: To achieve an accurate cardioid pattern, MAPP Online Pro and the Galileo® loudspeaker management system are required. Use MAPP Online Pro® to calculate the appropriate ratio of forward to rear facing loudspeakers, as well as the required Galileo parameter settings for polarity, delay, and gain. An infinite number of cardioid and directional configurations are possible and can be calculated and predicted with MAPP Online Pro. For more information, contact Meyer Sound Technical Support.

CHAPTER 3: MRK-1100 RIGGING KIT

The optional MRK-1100 rigging kit allows the 1100-LFC to be flown from the MTG-1100 top grid. The rigging kit is available as a factory-installed option or as a field upgrade and uses rugged GuideALinks and intuitive quick-release pins to securely link adjacent loudspeakers in groundstacked and flown array configurations.

MRK-1100 RIGGING KIT CONTENTS

The MRK-1100 rigging kit includes the following components:

PN 40.220.027.01

	Quantity	Part Number	Item
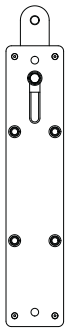	4	45.207.126.01	MRK-1100 rigging bar
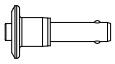	8	134.044	1/2 x 1.25” quick-release pins (with blue button)
	1	640.096	Loctite Medium Strength Threadlocker

NOTE: The MRK-1100 rigging bars are secured to the cabinet with the 16 3/8-inch flathead socket bolts shipped with the 1100-LFC (already screwed into the cabinet).

INSTALLING THE MRK-1100 RIGGING KIT

To install the MRK-1100 rigging kit:

1. Use a 7/32-inch hex wrench to remove the 16 3/8-inch flathead socket bolts from the 1100-LFC (8 on each side of the cabinet).

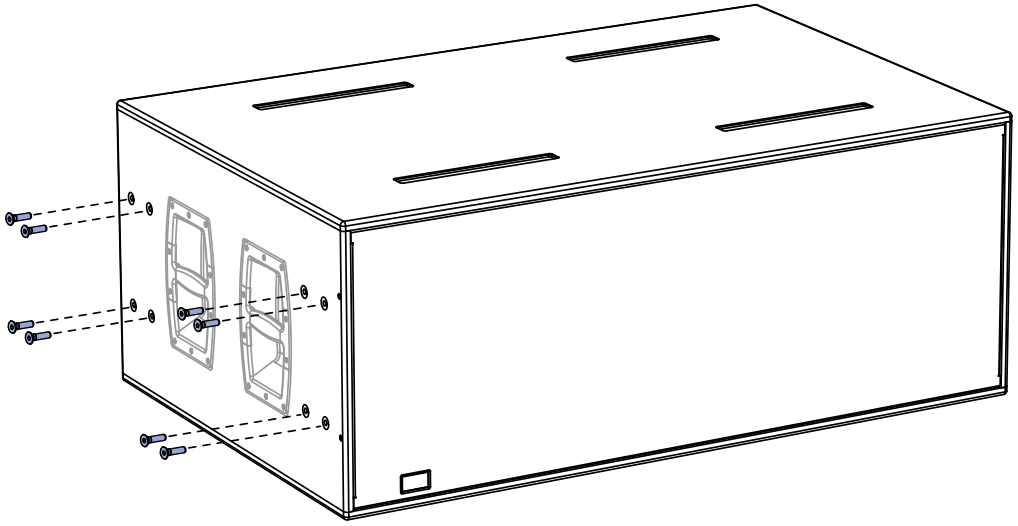

2. Apply 1 or 2 drops of Loctite to each 3/8-inch flathead socket bolt.
3. Secure the four rigging bars to the 1100-LFC cabinet with the 3/8-inch flathead socket bolts. Orient the rigging bars with the GuideALinks up and the GuideALink knobs facing away from the cabinet.

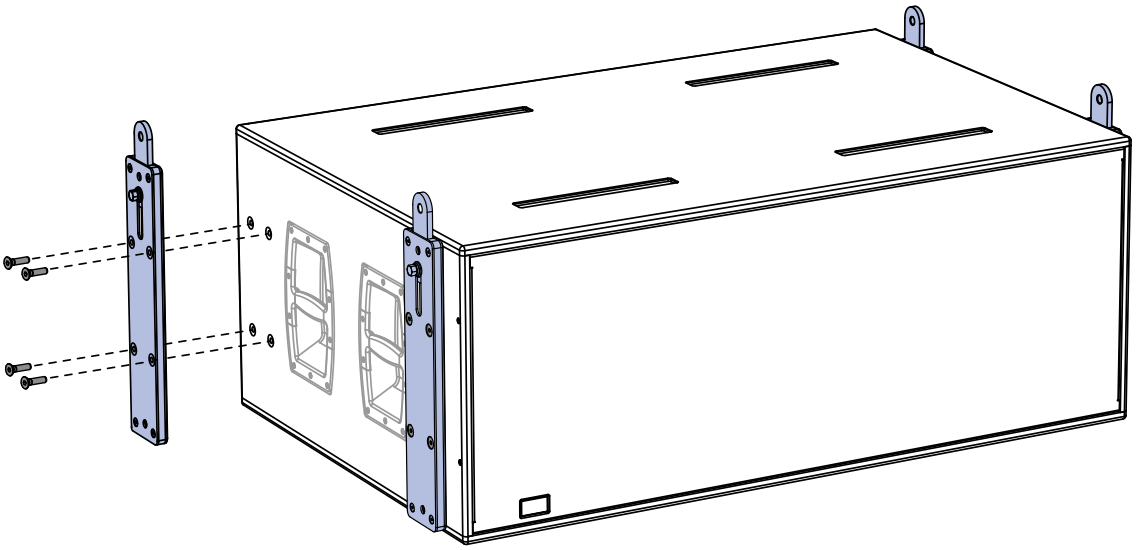

⚠ **CAUTION:** Make sure the socket bolts are securely tightened but do not over-tighten them. Approximately 15 foot-pounds of torque is recommended.

1100-LFC GUIDEALINKS

When equipped with the MRK-1100 rigging kit, the 1100-LFC includes four captive GuideALinks that link to adjacent units in flown and groundstacked arrays. Located at the top corners of the cabinet, the GuideALinks extend up and into the link slots of the cabinet above it (or into the link slots of the MTG-1100 top grid). The links extend and retract with recessed knobs and are secured with quick-release pins. Cabinets can be easily linked once they are stacked, since the GuideALinks extend up and into the link slots of the cabinet above. GuideALinks also accommodate reversed units for cardioid arrays.

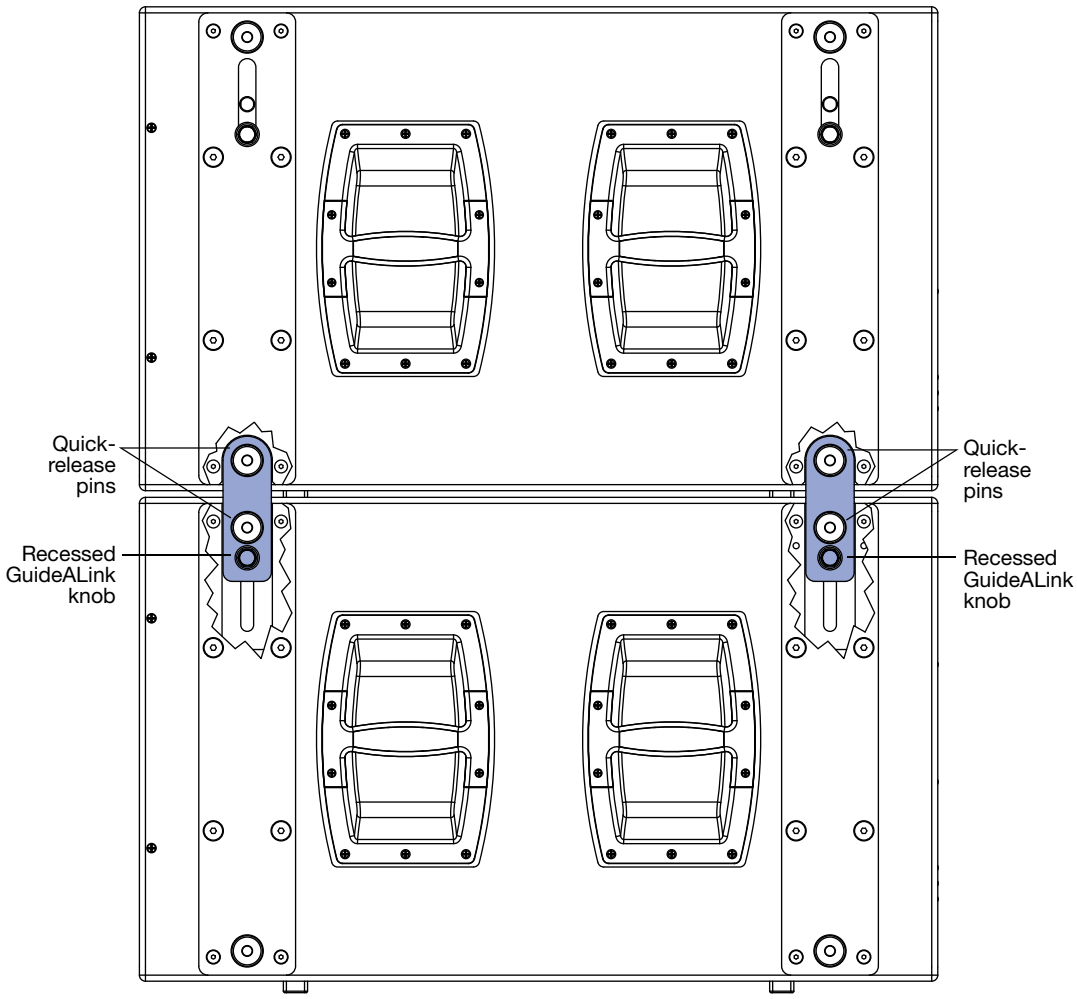

1100-LFCs with MRK-1100 Rigging Kit, GuideALinks Exposed

When linking 1100-LFCs, two quick-release pins are required for each GuideALink: one to secure the link in the bottom unit, and one to secure the link to the top (linked) unit. Eight 1/2 x 1.25-inch quick-release pins (blue) are included with the MRK-1100 rigging kit. Loudspeakers are linked at a fixed splay angle of 0 degrees.

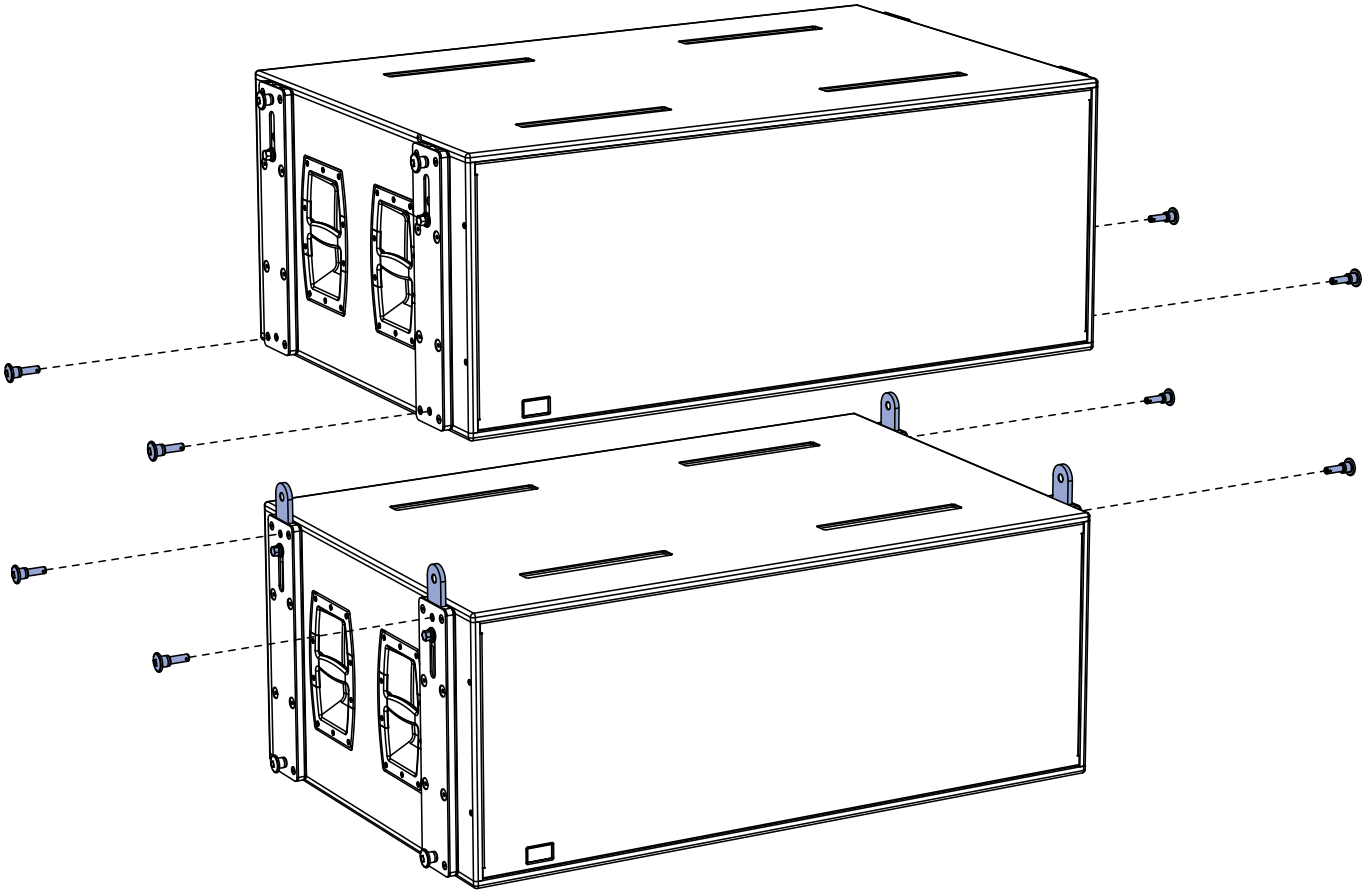

1100-LFC with MRK-1100 Rigging Kit, Exploded View

CHAPTER 4: MTG-1100 TOP GRID

The MTG-1100 top grid flies 1100-LFC arrays of up to 12 cabinets at a 7:1 safety ratio, or up to 16 cabinets at a 5:1 safety ratio. The grid accommodates a variety of pickup configurations with six pickup points, three each on the front and rear of the grid. The grid also includes 0.28-inch, center attachment points that accommodate brackets and adapters for lasers and inclinometers.

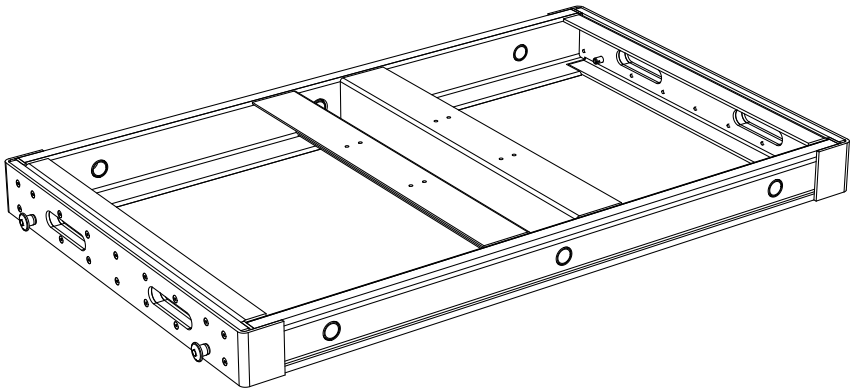

MTG-1100 Top Grid

The MTG-1100 is symmetrical and its front/rear orientation does not matter when attaching to the 1100-LFC. The grid has four bottom link slots, two on each side of the grid, that accept GuideALinks from the top cabinet in the array, which attaches at a fixed splay angle of 0 degrees. The grid includes four 1/2 x 1.50-inch quick-release pins (red) for securing the top cabinet.

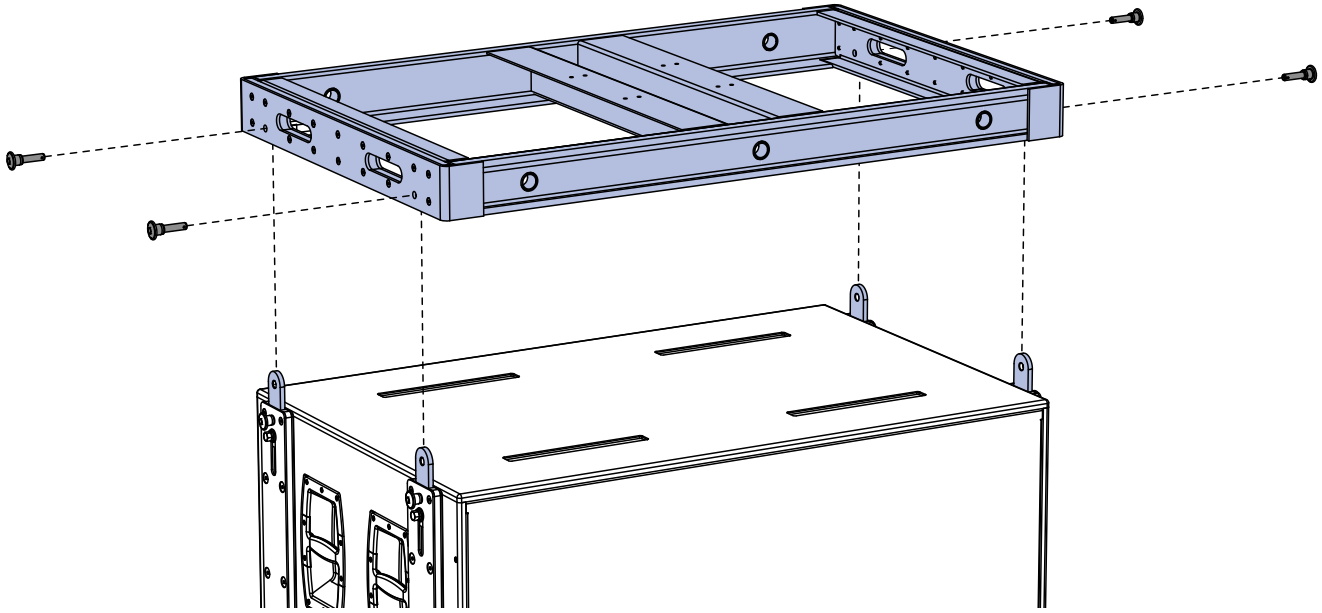

MTG-1100 Top Grid with 1100-LFC, Exploded View

⚠ **CAUTION:** Always use the red quick-release pins included with the MTG-1100 top grid to secure the top cabinet to the grid. Do not use the blue quick-release pins included with 1100-LFC in the grid as they are shorter and will not lock in place.

⚠ **CAUTION:** The MTG-1100 top grid requires 7/8-inch shackles for its pickup points.

TIP: The MTG-1100 top grid can travel installed on top of 1100-LFC stacks.

TIP: The MTG-1100 top grid includes 0.28-inch, center attachment points that accommodate brackets and adapters for lasers and inclinometers.

MTG-1100 Top Grid Kit Contents

PN 40.220.030.01

	Quantity	Part Number	Item
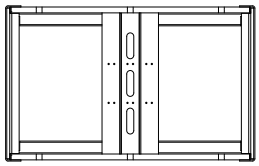	1	45.207.126.01	MTG-1100 top grid
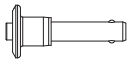	4	134.045	1/2 x 1.50” quick-release pins (with red button) and lanyards

MTG-1100 Top Grid Dimensions

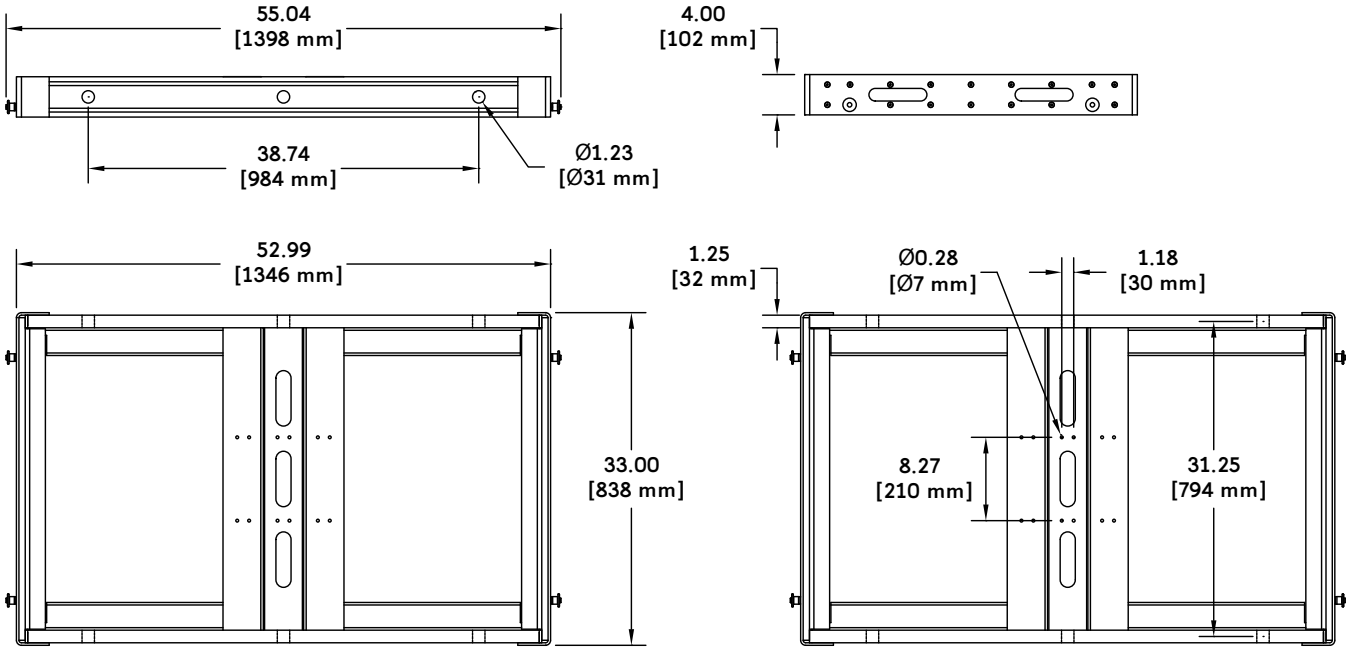

MTG-1100 Top Grid Dimensions

MTG-1100 Top Grid Weight: 195 lbs (88.5 kg)

MTG-1100 TOP GRID LOAD RATINGS

The following table lists the maximum suspended weight for the MTG-1100 top grid.

Table 1: MTG-1100 Top Grid Load Ratings

Safety Factor	Maximum Suspended Weight	Maximum Number of Cabinets	Supported Pickup Points
7:1	3,420 lbs (1,551 kg)	12	2 center points 3 points 4 corner points (Minimum leg length for front-to-rear bridle attachments, 24 inches / 610 mm; minimum leg length for side-to-side bridle attachments, 28 inches / 711 mm.)
5:1	4,560 lbs (2,068 kg)	16	2 center points 3 points 4 corner points (Minimum leg length for front-to-rear bridle attachments, 24 inches / 610 mm; minimum leg length for side-to-side bridle attachments, 28 inches / 711 mm.)

NOTE: The grid tilt should not be larger than the one achieved by the natural rotation of the array. Pull-back points should not be used to tilt the array.

Requirements for MTG-1100 Top Grid Load Ratings

The load ratings in Table 1 are only supported when the following requirements are observed:

- Supported pickup points are: two center points, three points, or four corner points.
- If a bridle is used between pickup points, the bridle angle at the apex must not be greater than 90 degrees.
- The minimum supported leg length for front-to-rear bridle attachments is 24 inches (610 mm). The minimum supported leg length for side-to-side bridle attachments is 28 inches (711 mm). Using a bridle leg shorter than the recommended length reduces the load rating and may damage the MTG-1100 top grid.
- There should be no splay between loudspeakers.
- The array should not be pulled from points other than those on the grid.
- Pull-back points should not be used to tilt the array.
- The grid tilt should not be larger than the one achieved by the natural rotation of the array.
- The maximum number of 1100-LFC loudspeakers that can be flown is based on a weight of 285 lbs (129.3 kg) for each 1100-LFC cabinet (with the MRK-1100 rigging hardware).
- The maximum load ratings regard the MTG-1100 top grid and flown loudspeakers as a system, including links and pins. Thus, the maximum stress point could change from one element to another in the system.
- The weight of the MTG-1100 top grid has not been included in Table 1. The table rates the maximum load for the grid. Pickup points and motors that will suspend the grid must be rated to the support the total weight of the grid (195.0 lbs, 88.5 kg) and its suspended loudspeakers (see Table 1).
- Always use properly rated rigging hardware. The MTG-1100 top grid requires 7/8-inch shackles for its pickup points.

CHAPTER 5: MTG-1100 PICKUP CONFIGURATIONS

The MTG-1100 top grid accommodates a variety of pickup configurations with its six pickup points, three each on the front and rear of the grid. When possible, use the front and rear pickup points to change the tilt of the grid with the front and rear motors. You can also bridle between pickup points for greater stability, as compared to single front and rear pickup points.

⚠ **CAUTION:** Always use properly rated rigging hardware. The MTG-1100 top grid requires 7/8-inch shackles for its pickup points.

⚠ **CAUTION:** When using bridles between pickup points on the MTG-1100, the angle of the bridle at the apex should not be greater than 90 degrees to avoid increasing the load on the bridles and damaging the grid.

TWO PICKUP POINTS

The MTG-1100 top grid supports the following configurations with two pickup points.

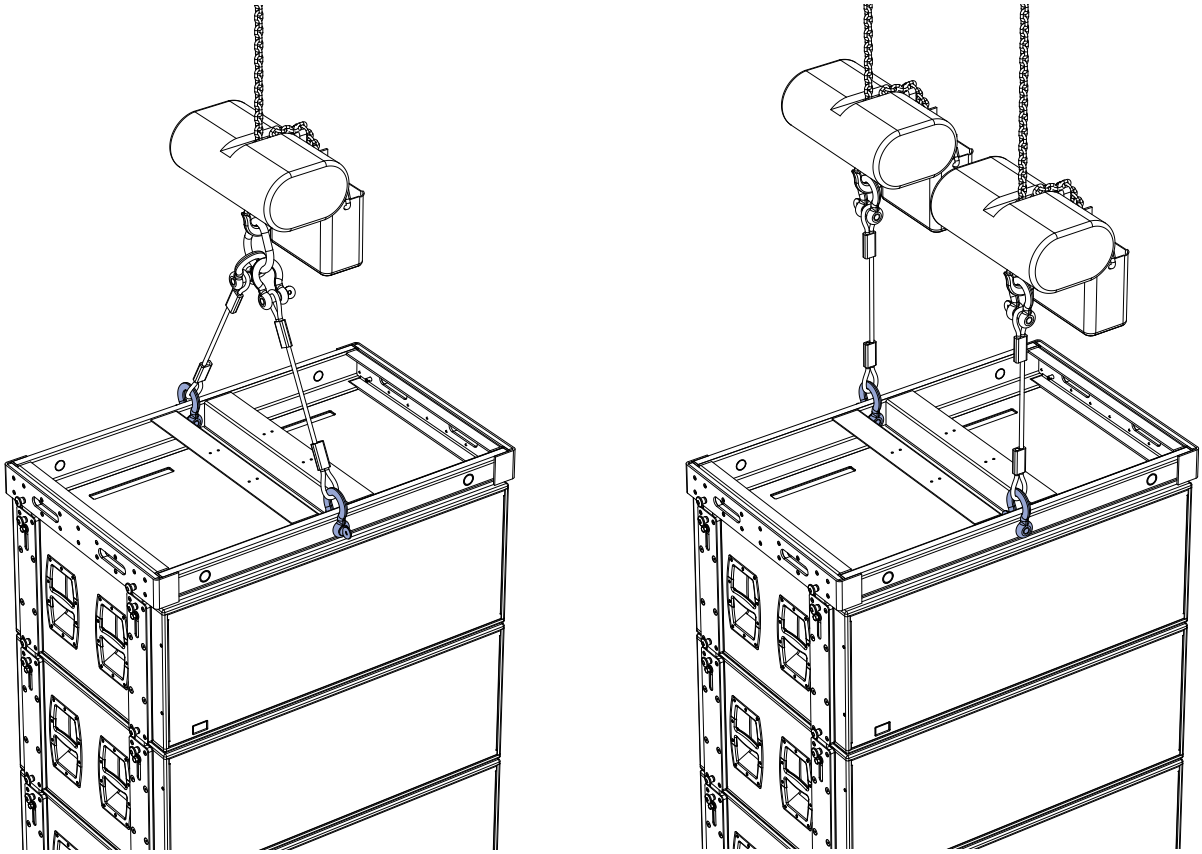

2 to 1 Center Point Configuration (Left), 2 to 2 Center Point Configuration (Right)

⚠ **CAUTION:** When suspending MTG-1100 arrays from one or two motors, make sure each motor and ceiling pickup point (above the hook) are rated to hold the total weight of the grid and array.

⚠ **CAUTION:** The minimum leg length for front-to-rear bridle attachments (left) is 24 inches (610 mm).

THREE PICKUP POINTS

The MTG-1100 top grid supports the following configurations with three pickup points.

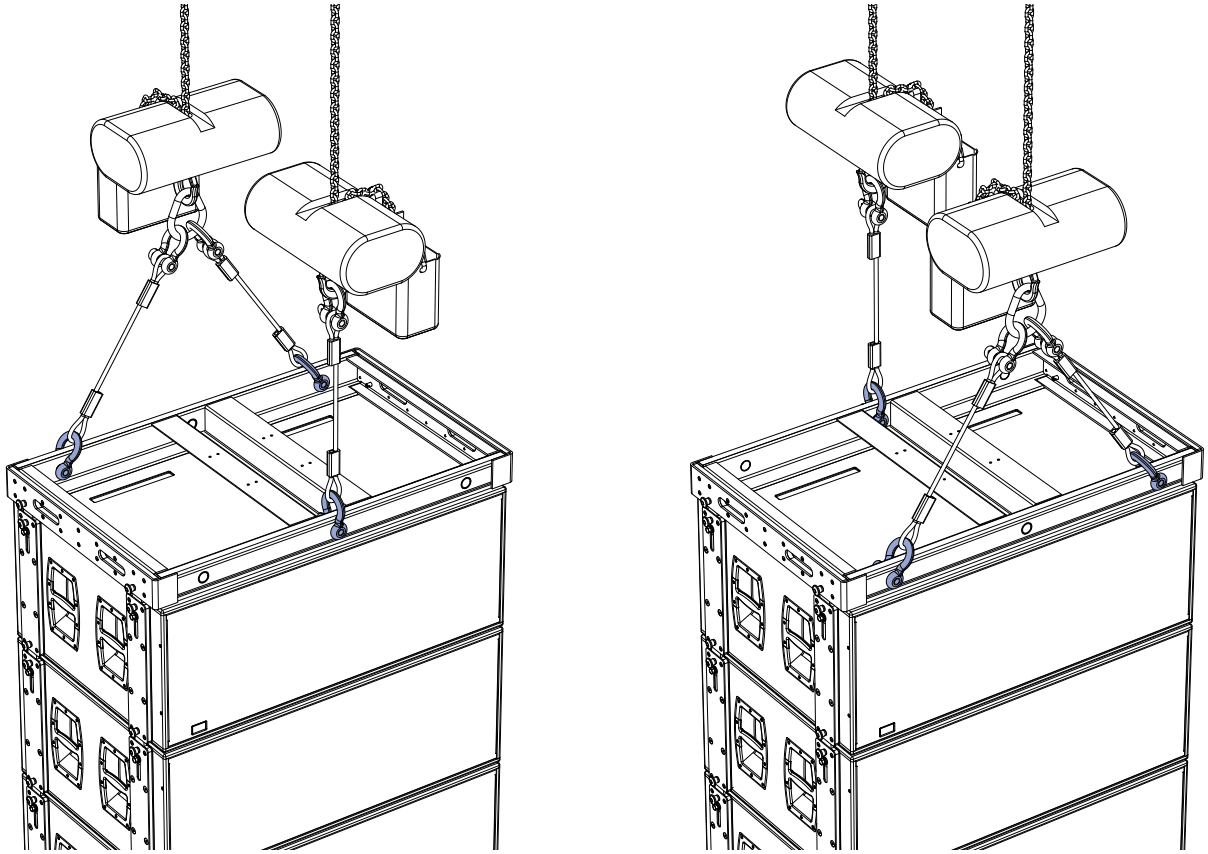

3 to 2 Center/Corner Point Configuration (Left), 3 to 2 Corner/Center Point Configuration (Right)

⚠ **CAUTION:** When suspending MTG-1100 arrays from one or two motors, make sure each motor and ceiling pickup point (above the hook) are rated to hold the total weight of the grid and array.

⚠ **CAUTION:** The minimum leg length for side-to-side bridle attachments (left and right) is 28 inches (711 mm).

FOUR PICKUP POINTS

The MTG-1100 top grid supports the following configurations with four pickup points.

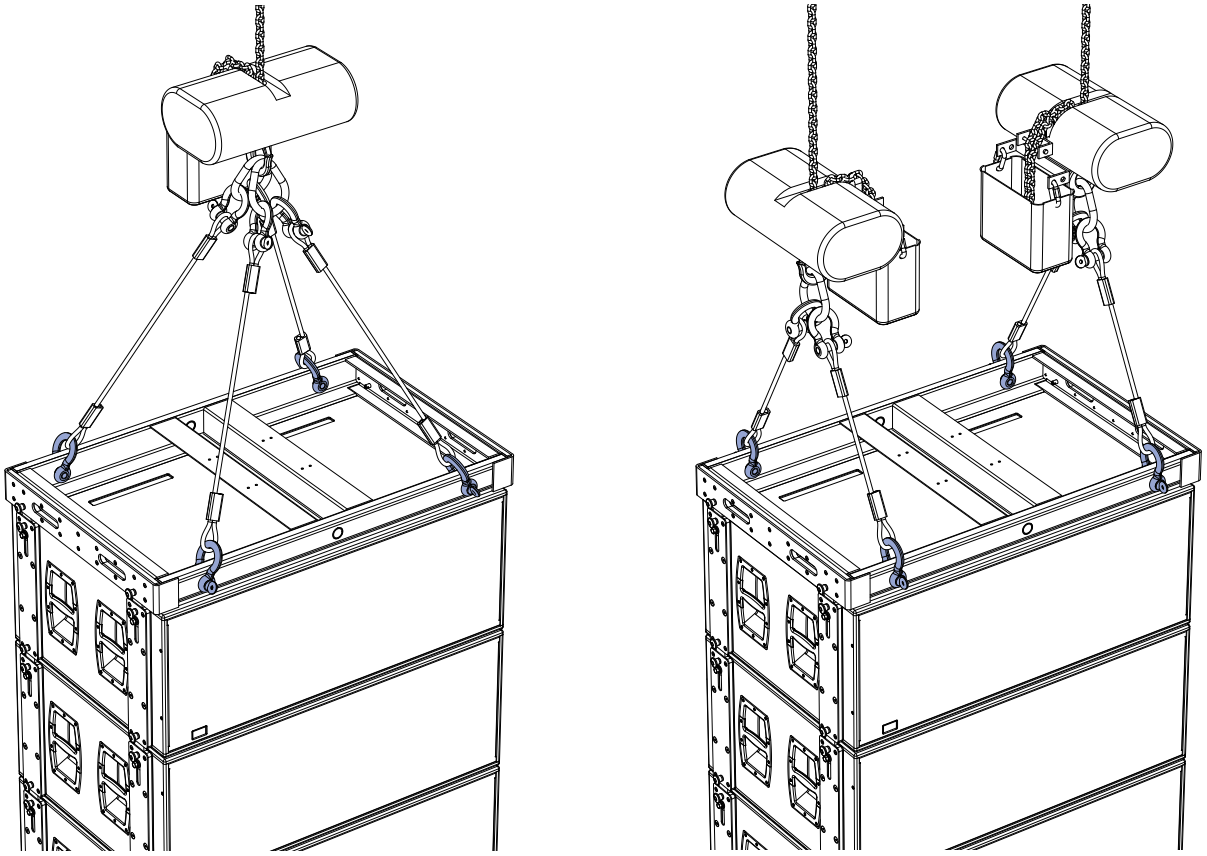

4 to 1 Corner Point Configuration (Left), 4 to 2 Corner Cross Point Configuration (Right)

⚠ **CAUTION:** When suspending MTG-1100 arrays from one or two motors, make sure each motor and ceiling pickup point (above the hook) are rated to hold the total weight of the grid and array.

⚠ **CAUTION:** The minimum leg length for side-to-side bridle attachments (left) is 28 inches (711 mm).

⚠ **CAUTION:** The minimum leg length for front-to-rear bridle attachments (right) is 24 inches (610 mm).

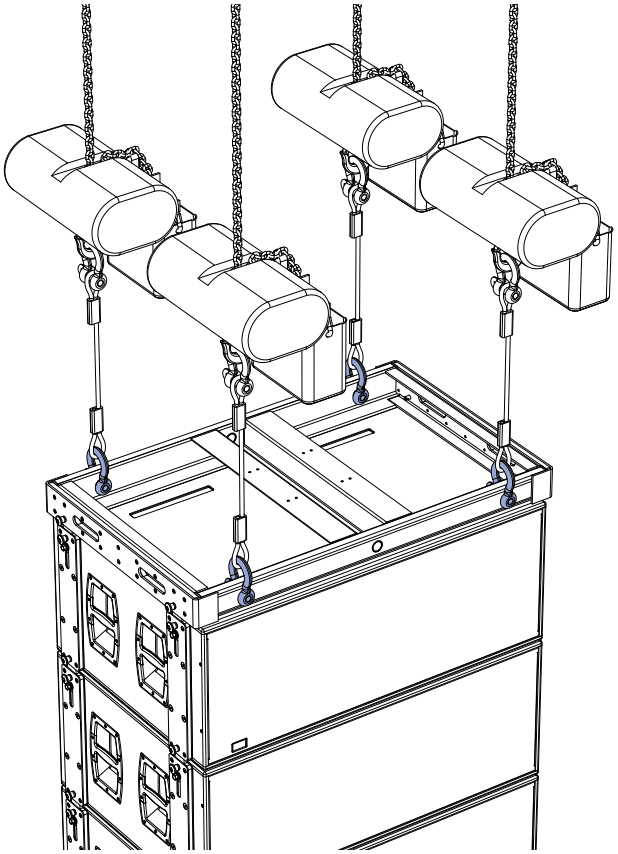

4 to 4 Corner Point Configuration

CHAPTER 6: MVP-LEO-M VEE PLATE

The optional MVP-LEO-M Vee plate provides ±21 degrees of horizontal rotation for the MTG-1100 top grid. The bottom of the Vee plate attaches to the grid's rear center attachment point. The top corners of the Vee plate attach to two motors, which, when adjusted, affect the horizontal rotation of the grid.

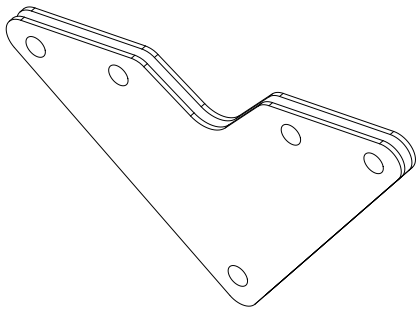

MVP-LEO-M Vee Plate

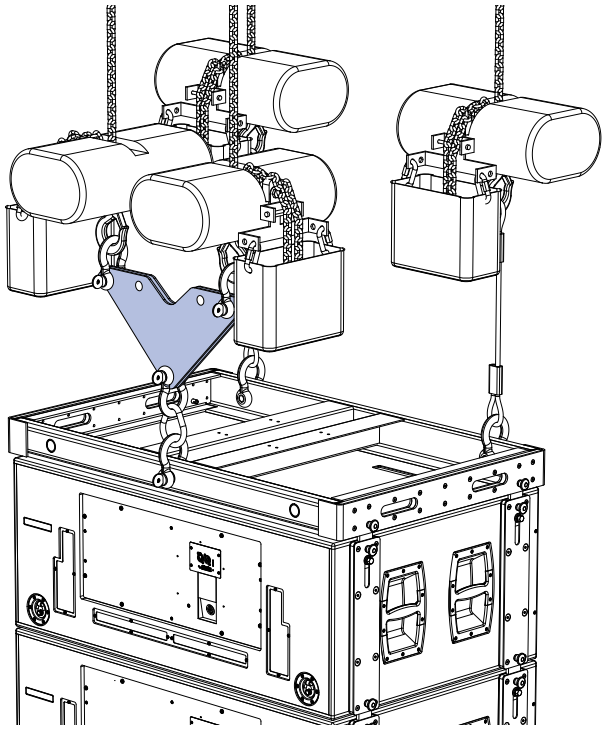

MVP-LEO-M Vee Plate Attached to MTG-1100 Top Grid

NOTE: The MVP-LEO-M Vee plate is compatible with any Meyer Sound multipurpose grid or top grid with rear center attachment points.

MVP-LEO-M VEE PLATE LOAD RATINGS

The MVP-LEO-M Vee plate has the following load ratings:

- 7:1 safety factor, 5,092 lbs
- 5:1 safety factor, 7,129 lbs

CHAPTER 7: MAS-1100 ARRAY SPACER

The optional MAS-1100 array spacer can be placed between cabinets to lengthen 1100-LFC arrays, improving vertical directionality. Similar to an 1100-LFC equipped with the MRK-1100 rigging kit, the MAS-1100 array spacer includes four captive GuideALinks that extend up and into the link slots of the cabinet above. The links extend and retract with recessed knobs and are secured with the same 1/2 x 1.50-inch quick-release pins included with the 1100-LFC. The array spacer has four bottom slots, two on each side, that accept GuideALinks from the cabinet below.

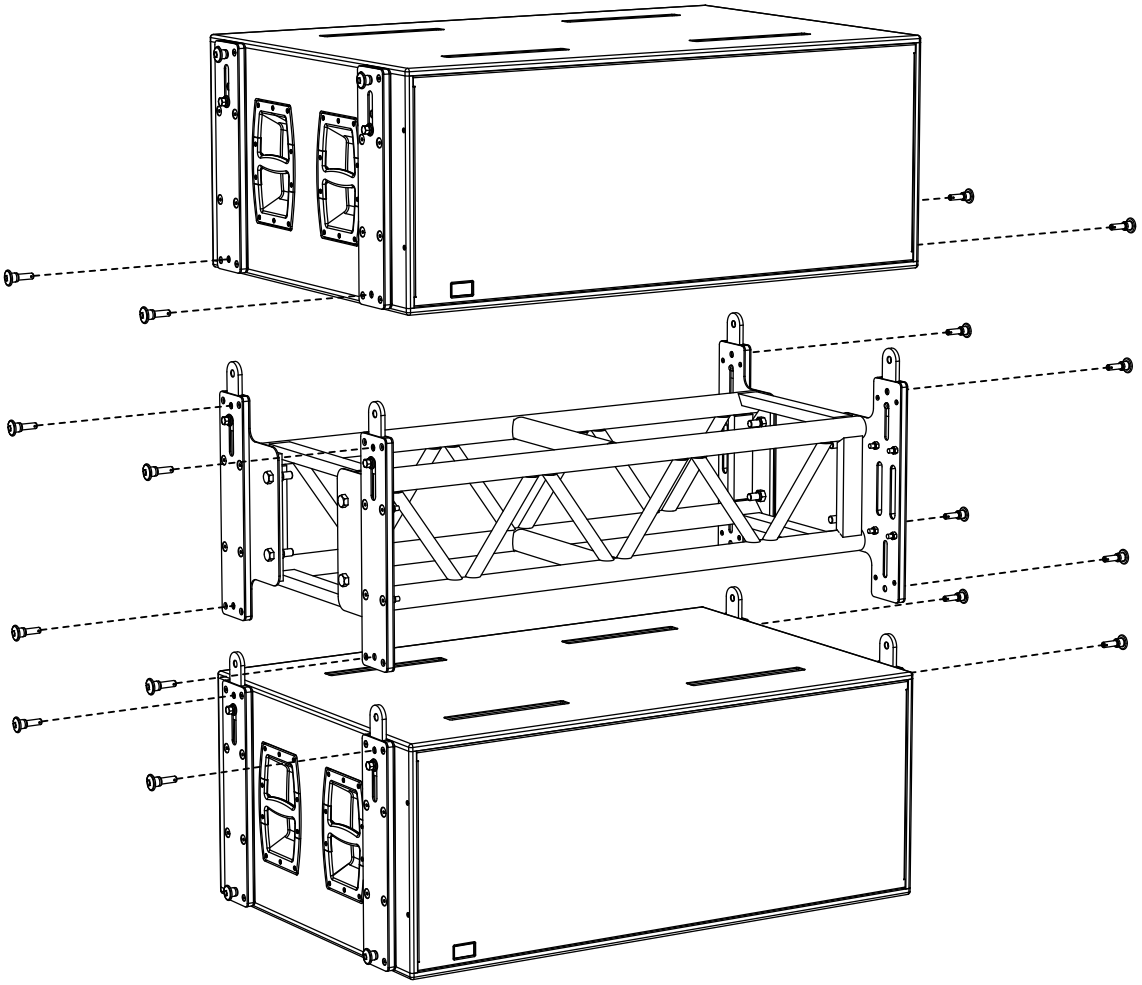

MAS-1100 Array Spacer with Two 1100-LFCs, Exploded View

The MAS-1100 array spacer is symmetrical and its front/rear orientation does not matter when attaching to 1100-LFCs. The array spacer attaches at a fixed splay angle of 0 degrees and accommodates reversed units for cardioid arrays.

MAS-1100 Array Spacer Kit Contents

PN 40.220.080.01

	Quantity	Part Number	Item
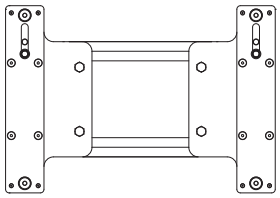	1	45.220.080.01	MAS-1100 array spacer
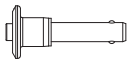	8	134.044	1/2 x 1.50” quick-release pins (with blue button)

MAS-1100 Array Spacer Dimensions

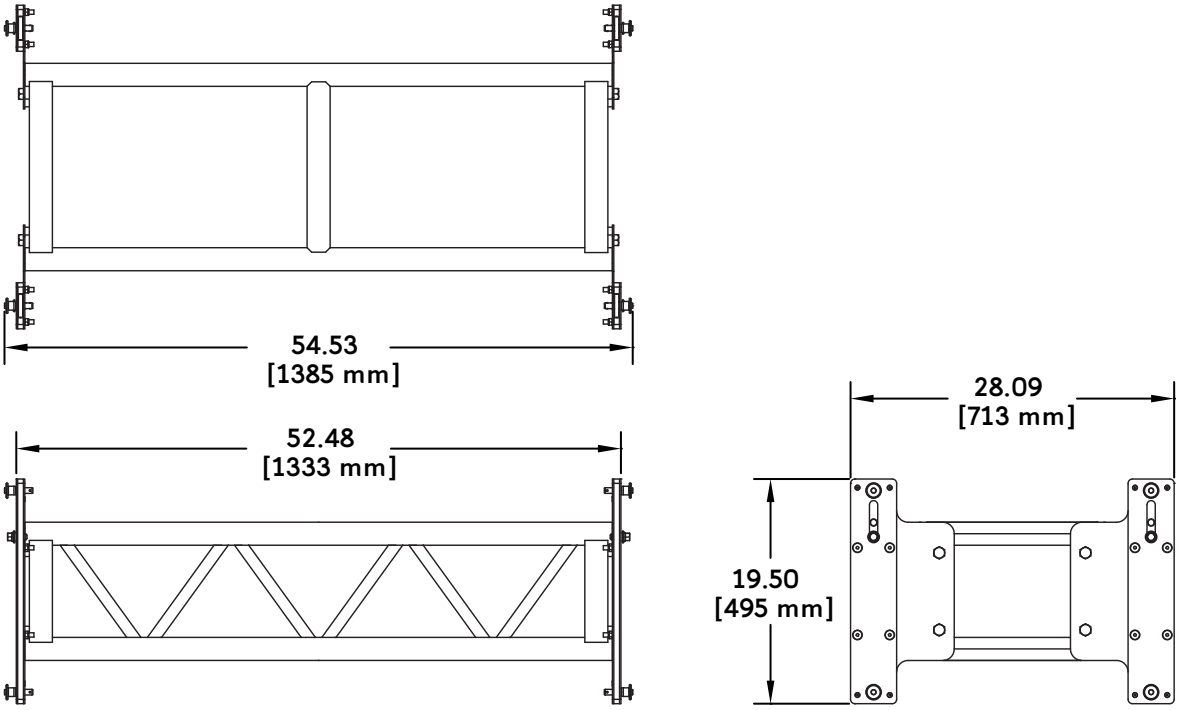

MAS-1100 Array Spacer Dimensions

MAS-1100 Array Spacer Weight: 82 lbs (37.2 kg)

CHAPTER 8: MCF-1100 CASTER FRAME

The optional MCF-1100 caster frame safely supports up to three 1100-LFCs for transport, making it easy to assemble and disassemble arrays in blocks of three cabinets. The caster frame's sturdy construction allows it to be conveniently moved with forklifts. The MCF-1100 can also be used to support 1100-LFCs in groundstacked configurations.

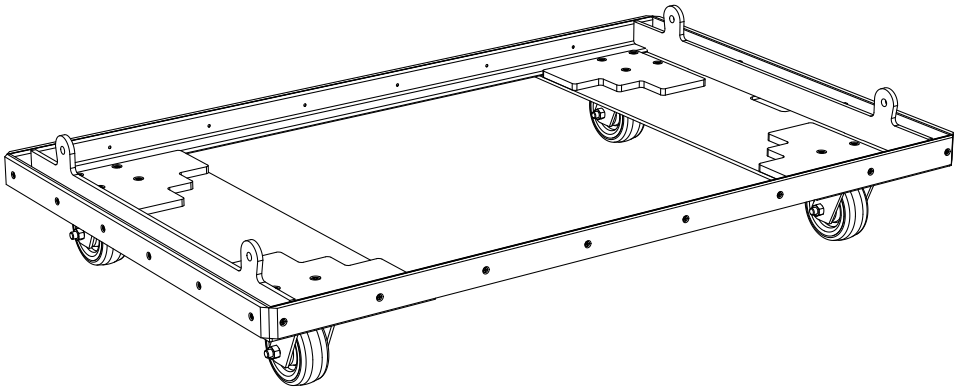

MCF-1100 Caster Frame

1100-LFC cabinets need not be equipped with the MRF-1100 rigging kit for transport with the caster frame. The loudspeaker skids will ensure that cabinets stack cleanly in the caster frame. However, to avoid tipping, straps (not included) should be used when transporting cabinets that have not been fitted with the MRK-1100 rigging kit (see Figure 1).

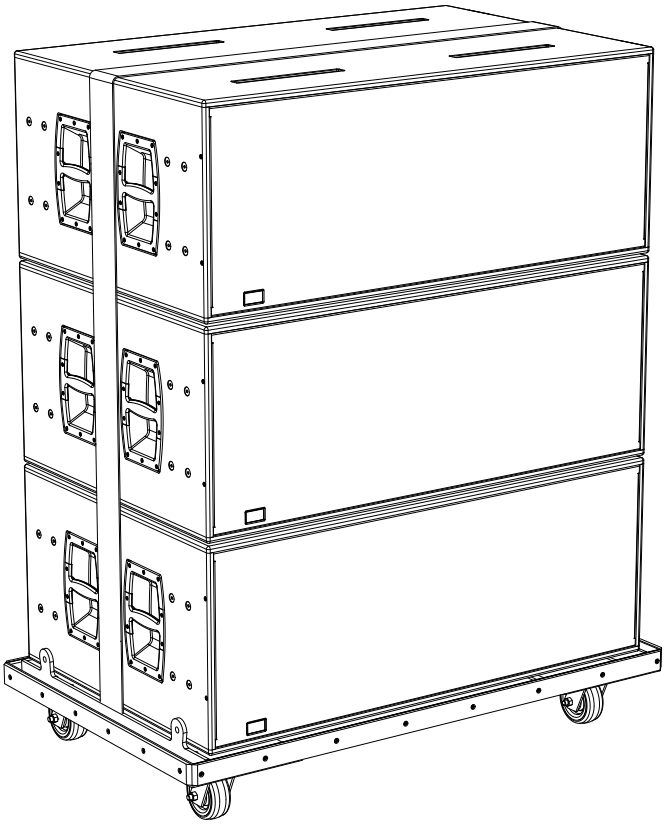

Figure 1: MCF-1100 Caster Frame with 1100-LFC Stack with Straps (Not Included)

1100-LFC cabinets equipped with the MRF-1100 rigging kit provide for more secure transport as the bottom cabinet can be linked and pinned to the caster frame (see Figure 2). Each of the three cabinets can be linked and pinned together as well.

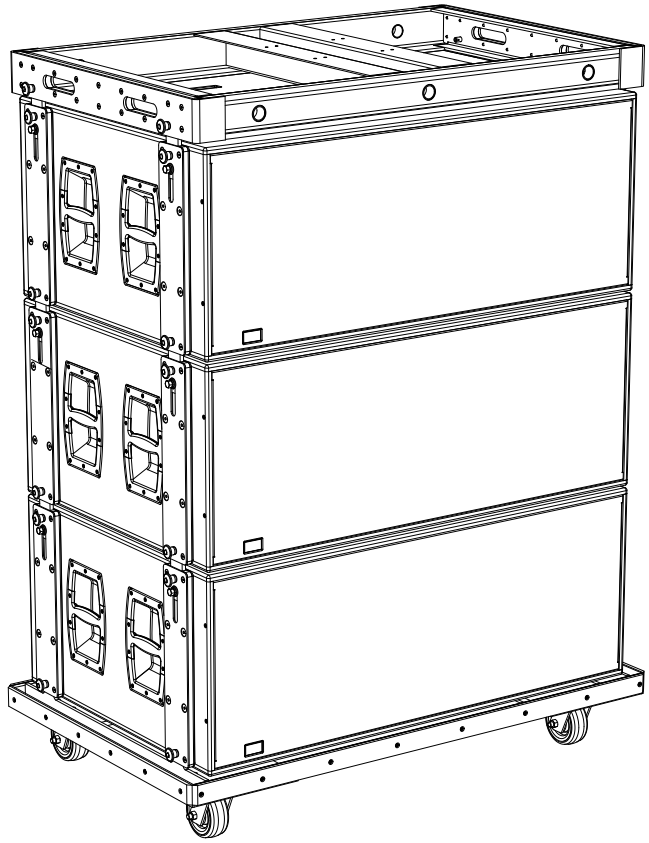

Figure 2: MCF-1100 Caster Frame with 1100-LFC Stack with Rigging Kits (MTG-1100 Top Grid on Top)

TIP: The MTG-1100 top grid can travel installed on top of 1100-LFC stacks.

TIP: Durable nylon covers are available for stacks of two or three units, ensuring the 1100-LFC is completely road ready.

MCF-1100 Caster Frame Dimensions

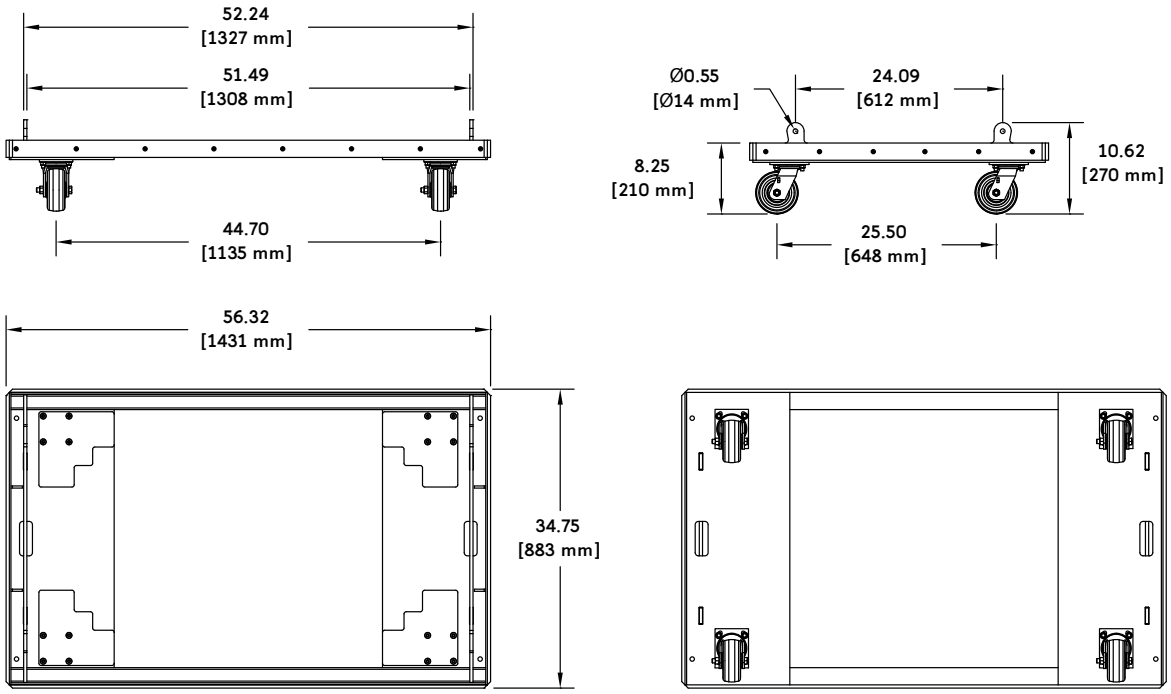

MCF-1100 Caster Frame Dimensions

MCF-1100 Caster Frame Weight: 138 lbs (62.6 kg)

MCF-1100 Truck Packing Examples

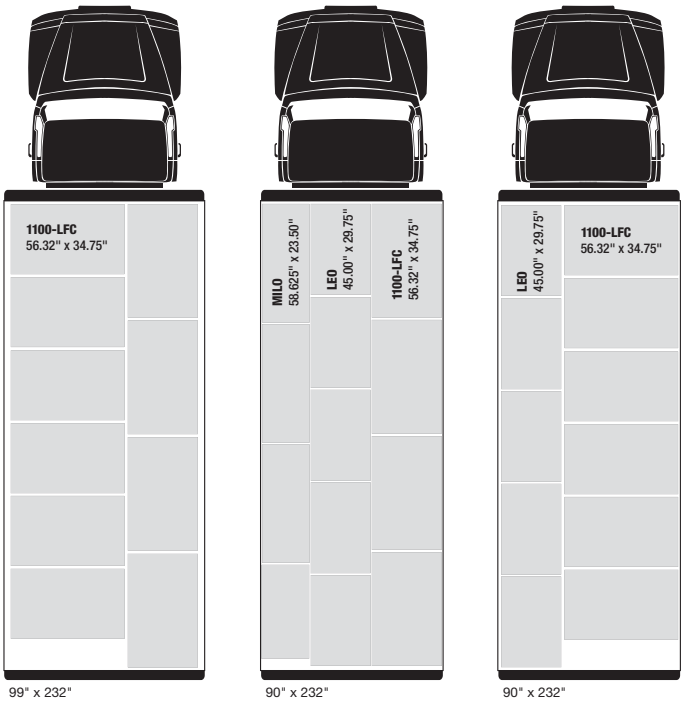

MCF-1100 Truck Packing Configurations

SAFETY GUIDELINES FOR THE MCF-1100 CASTER FRAME

- Do not stack more than three 1100-LFCs on the caster frame.
- Use straps when transporting 1100-LFCs that have not been fitted with the MRK-1100 rigging kit.
- Avoid moving stacks in the front-to-back direction of the 1100-LFCs (the long side); always move stacks sideways to avoid tipping.

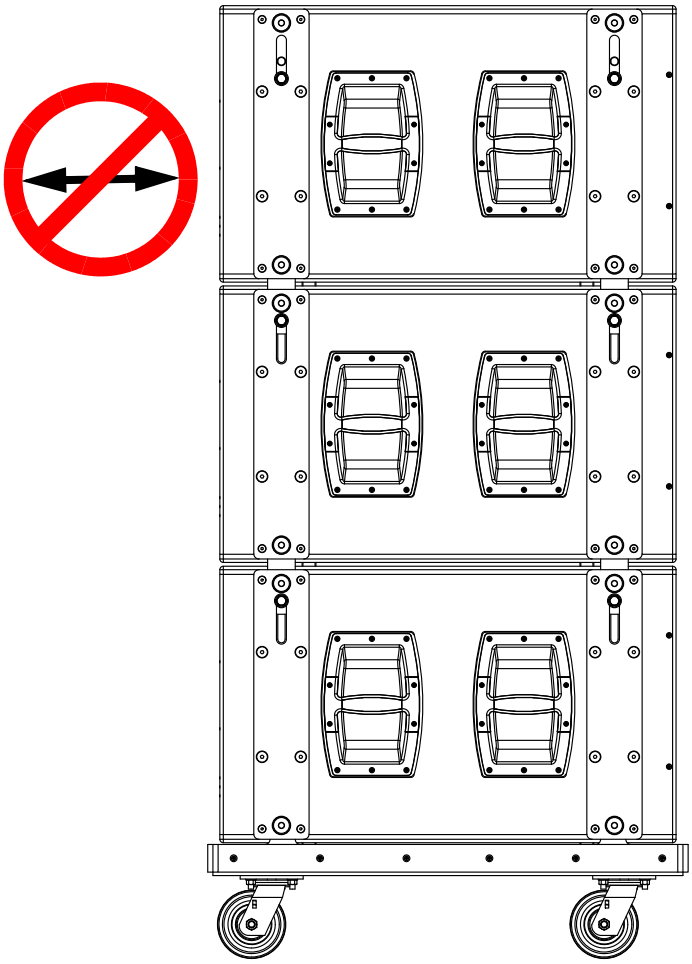

- When lifting an 1100-LFC stack with a forklift, always keep the forks wide and close to the caster frame's wheels. Failing to do so may bend the caster frame or cause the stack to tip.
- When groundstacking 1100-LFCs with the caster frame, make sure that all four caster wheels are blocked to prevent the stack from rolling away.

APPENDIX A: ASSEMBLING ARRAYS WITH THE MTG-1100 TOP GRID

To assemble an 1100-LFC array with the MTG-1100 top grid:

1. Attach the MTG-1100 top grid to the motors:

- Place the MTG-1100 on the floor or on a road trunk in the approximate location where the rigging points have been established and the motors have been hung.
- Attach 7/8-inch shackles to the desired attachment points on the MTG-1100 (see Chapter 5, “MTG-1100 Pickup Configurations”).

> **NOTE:** A 2-foot length of wire rope, or deck chain, placed between the shackles and the motor’s chain hooks is recommended to prevent the chain bags from getting in the way of the top loudspeaker.

- Lower the motors so the chain hooks can be attached to the 7/8-inch shackles. Once the shackles are secured to the chain hooks, raise the grid slightly higher than the first stack of 1100-LFC loudspeakers to be linked.

2. Link the MTG-1100 top grid to the first 1100-LFC stack:

- Roll the MCF-1100 caster frame with the first 1100-LFC stack into position under the grid. Up to three 1100-LFC loudspeakers can be safely transported with the caster frame. Make sure the GuideALinks for the top cabinet have been retracted and stowed.
- Lower the grid so it is approximately 1 inch above the top cabinet in the stack. Adjust the placement of the stack on the floor so the top cabinet’s rigging bars align with the grid’s link slots. Extend the GuideALinks from the top cabinet into the grid’s link slots. Don’t worry if you can’t yet pin the GuideALinks to the grid. First pin the GuideALinks in the top cabinet on the floor, in the extended position, with the 1/2 x 1.25-inch quick-release pins (blue) included with the 1100-LFC.
- Lower the grid just enough so the GuideALinks from the top cabinet can be pinned to the grid. Pin the GuideALinks from the top cabinet to the grid with the 1/2 x 1.50-inch quick-release pins (red) included with the grid.
- Make sure that each GuideALink is pinned to the grid with the 1/2 x 1.50-inch quick-release pins (red) included with the grid, and that each link is pinned in the top cabinet with the 1/2 x 1.25-inch quick-release pins (blue) included with the 1100-LFC. Make sure the GuideALinks for the other loudspeakers in the stack are securely pinned with the 1100-LFC quick-release pins (blue).
- Attach the AC power, audio, and RMS cables to the loudspeaker stack on the floor.
- Raise the grid so the loudspeakers are suspended slightly off the floor and remove the two rear quick-release pins securing the caster frame to the bottom cabinet. Rest the rear wheels of the caster frame on the floor and remove the two front quick-release pins to detach the caster frame from the bottom cabinet. Return the four quick-release pins to the bottom cabinet.
- Raise the grid so the suspended loudspeakers are slightly higher than the next stack of 1100-LFCs to be linked. Roll away the empty caster frame.

3. Link the suspended 1100-LFCs to the next stack in the array:

- Roll the next stack of 1100-LFCs into position under the suspended loudspeakers. Make sure the GuideALinks for the top cabinet in the new stack have been retracted and stowed.

> **CAUTION:** If the GuideALinks are not stowed as described in this step, you may damage the bottom of the suspended cabinet when lowering it.

- Lower the suspended loudspeakers so the bottom cabinet is approximately 1 inch above the top cabinet on the floor. Adjust the placement of the stack on the floor so the top cabinet's rigging bars align with those of the suspended cabinet above it. Extend the GuideALinks from the top cabinet into the slots of the suspended cabinet above it. Don't worry if you can't yet pin the GuideALinks to the suspended cabinet. First pin the GuideALinks in the top cabinet on the floor, in the extended position, with the 1/2 x 1.25-inch quick-release pins (blue) included with the 1100-LFC.
- Lower the suspended loudspeakers just enough so the GuideALinks from the top cabinet on the floor can be linked to the suspended cabinet. Pin the GuideALinks from the top cabinet on the floor to the suspended cabinet with the 1/2 x 1.25-inch quick-release pins (blue) included with the 1100-LFC.
- Make sure the GuideALinks for the other loudspeakers in the stack on the floor are securely pinned.
- Attach the AC power, audio, and RMS cables to the loudspeaker stack on the floor.
- Raise the grid so the loudspeakers are suspended slightly off the floor and remove the two rear quick-release pins securing the caster frame to the bottom cabinet. Rest the rear wheels of the caster frame on the floor and remove the two front quick-release pins to detach the caster frame from the bottom cabinet. Return the four quick-release pins to the bottom cabinet.
- Raise the grid so the suspended loudspeakers are slightly higher than the next stack of 1100-LFCs to be linked. Roll away the empty caster frame.
- Repeat the previous steps until the entire array has been assembled. All loudspeaker-to-loudspeaker links should be secured with the 1/2 x 1.25-inch quick-release pins (blue) included with 1100-LFC.

⚠ **CAUTION:** Do not lift an 1100-LFC stack until all four GuideALinks have been pinned for each cabinet. Failing to do so could damage the rigging bars or GuideALinks for the linked units.

thinking sound

Meyer Sound Laboratories Inc.
2832 San Pablo Avenue
Berkeley, CA 94702

www.meyersound.com
T: +1 510 486.1166
F: +1 510 486.835

© 2012
Meyer Sound. All rights reserved.
MTG-1100 Grid Assembly Guide — 05.220.030.01 A